ASSEMBLY INSTRUCTIONS

Thanks for purchasing one of our products.
Please read carefully the assembly instructions before the installation.
Do not discard this manual or any of the packaging material until the unit has been completely assembled.

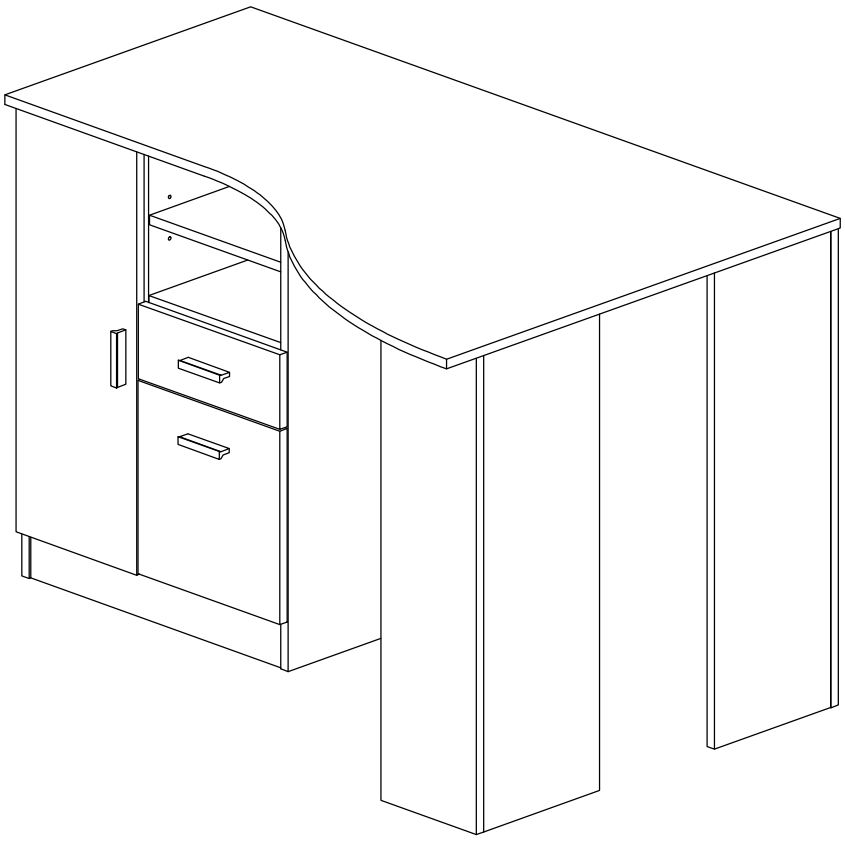

▪PARTS LIST

A ▪ Main Panel	B 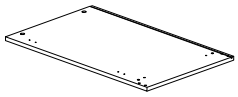 ▪ Left Panel	C 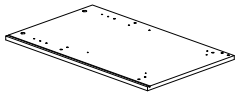 ▪ Right Panel	D 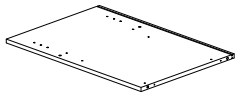 ▪ Middle Panel
E 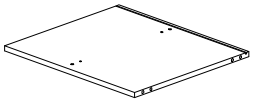 ▪ Bottom Panel	F 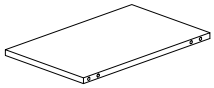 ▪ Partition Panel	G 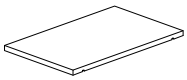 ▪ Adjust Panel	H 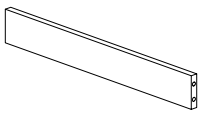 ▪ Leg Panel, Bottom x 2
I 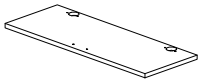 ▪ Door Panel	J ▪ Leg Panel, Front	K ▪ Leg Panel, Back	L 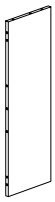 ▪ Leg Panel, Left
M ▪ Leg Panel, Right	N 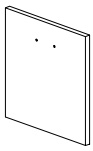 ▪ Large Drawer Front Panel	O ▪ Small Drawer Front Panel	P 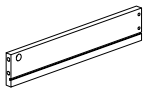 ▪ Small Drawer Left Panel
Q 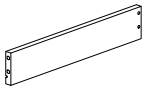 ▪ Small Drawer Right Panel	R ▪ Small Drawer Back Panel	S 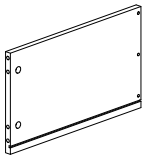 ▪ Large Drawer Left Panel	T 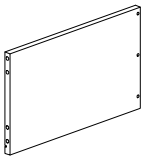 ▪ Large Drawer Right Panel
U 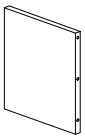 ▪ Large Drawer Back Panel	V 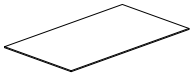 ▪ Drawer Bottom Panel x2	W 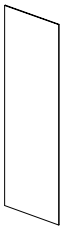 ▪ Left Back Panel	X 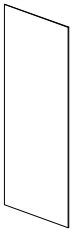 ▪ Right Back Panel

▪HARDWARE

PART	QTY.	ITEM	
1	42Pcs	***Wooden Pin***	
2	34Sets	***Cam Lock & Bolt Sets***	
3	26Pcs	***Hole Covers***	
4	8Pcs	***Screw - 3.5 x 16mm***	
5	8Pcs	***Screw - 5 x 8mm*** *(Euro Screw)*	
6	8Pcs	***Screw TP 10#x1/2"***	
7	12Pcs	***Screw - 4 x 38mm***	
8	2Sets	***Door Hinge Set*** *(Both parts come joined together)*	a b
9	4Pcs	***Metal Pin***	
10	12Pcs	***Plactic Feet***	
11	3Sets	***Handle L Shape (84mm) M3.6x22mm Screw***	

PART	QTY.	ITEM	
12	2Sets	***Sliders Sets***	Right a b a b Left

HOW TO ASSEMBLE PARTS USING CAM BOLTS AND CAM LOCKS.
☛ This is not an assembly step; it is a guide for when you are actually doing the assembly using this kind of hardware.

Cam Bolt

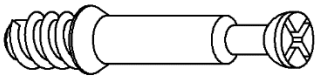

Cam Lock

1. Screw the bolt into the corresponding panel.

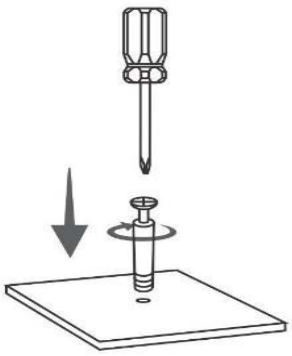

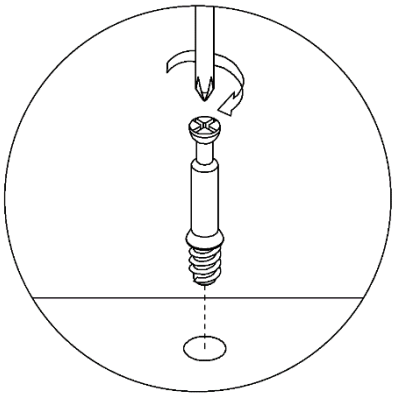

2. insert the cam lock in the hole of the other panel making sure it is aligned to engage with the bolt, then join both panels.

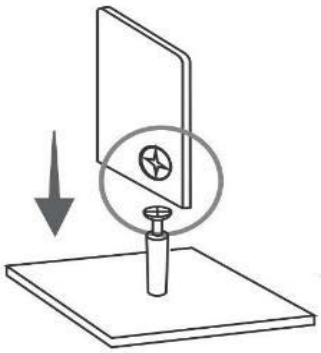

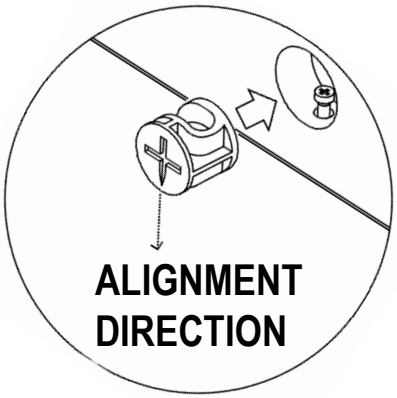

3. The panels might have a very small gap which is normal; turn the cam lock clockwise to lock the parts together and the gap will also close.

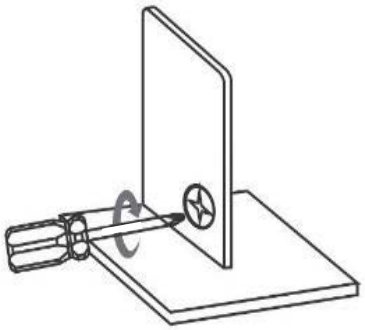

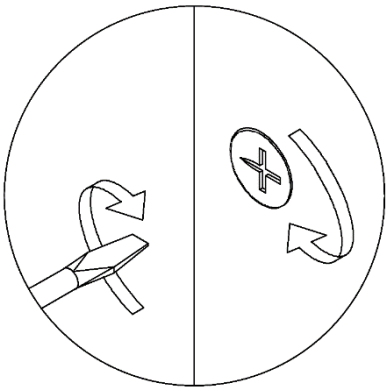

⚠ BEFORE YOU START THE ASSEMBLY, PLEASE READ THE FOLLOWING TIPS AND WARNINGS.

- ☛ Do a quick inventory to make sure the product contains all the parts and hardware.
- ☛ Missing, damaged and defective parts can be replaced at no cost to you. Please refer to the CONTACT and the WARRANTY cards included with the product.
- ☛ If during assembly you find an issue or need clarification, please contact our Customer Service for assistance. Please refer to the CONTACT card included with the product.
- ☛ On each step read the instructions and analyze the illustrations thoroughly before proceeding to do the assembly.
- ☛ To avoid misalignments, always leave the screws loose and tighten them until all pieces are positioned correctly.
- ☛ Do not overtighten or force the screws as they might break, strip, damage the threads of the holes or get stuck inside the part.
- ☛ Sometimes the laminate might cover partially or entirely the hole on a panel, but the hole should still be located under the laminate.
- ☛ If there is no visible hole for the screw, pass and press the tip of your finger over the area where the hole should be located to feel the indentation, and once found, carefully pierce the laminate to reveal the hole underneath.
- ☛ If the hole seems too small for the screw, first make sure you are using the correct size of screw and that it's been installed in the correct hole. If the hole still appears to be too small, carefully pierce the laminate to reveal the hole's actual size.
- ☛ Make sure you understand which hardware will be used on each step. Using the wrong size of screw, bolt or pin might cause damage to the part in which it is being used.

1

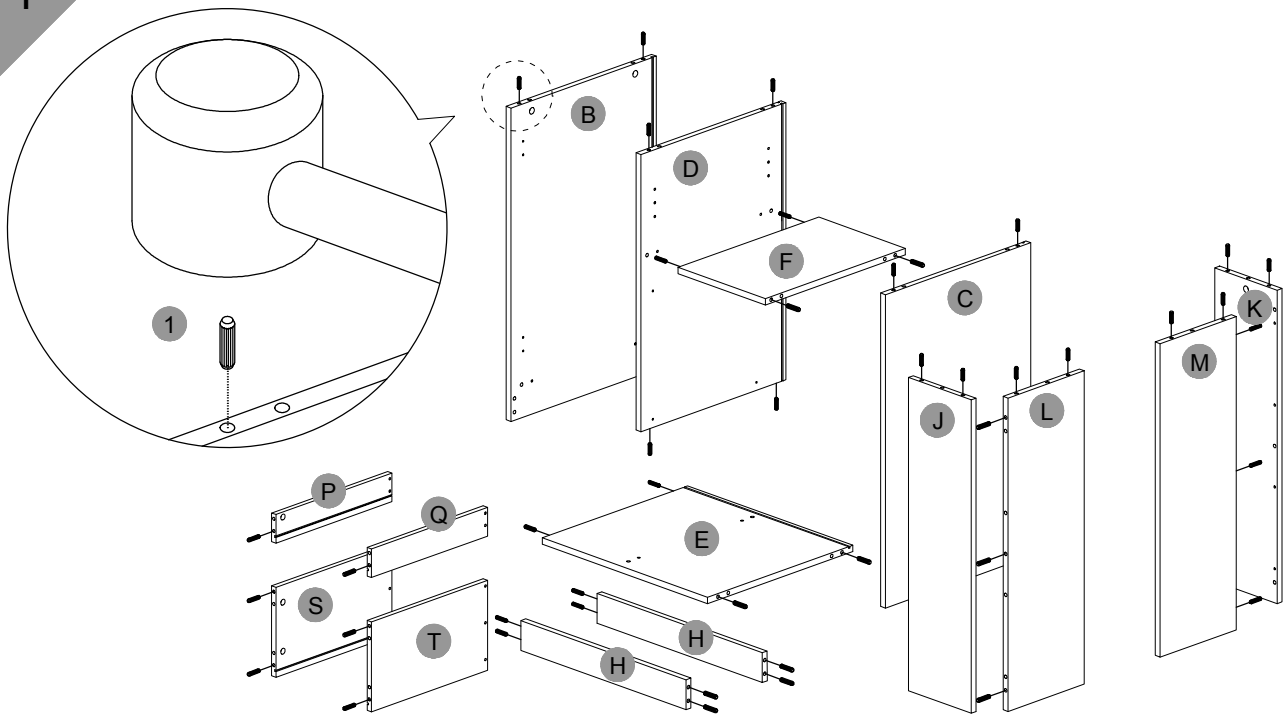

▪ Install 42pcs of Wooden Pins (1) into all panels as shown. Use a wooden or light rubber hammer to avoid damage to the pins. Please pay close attention to which holes you have to use, and do not join any parts yet!

2

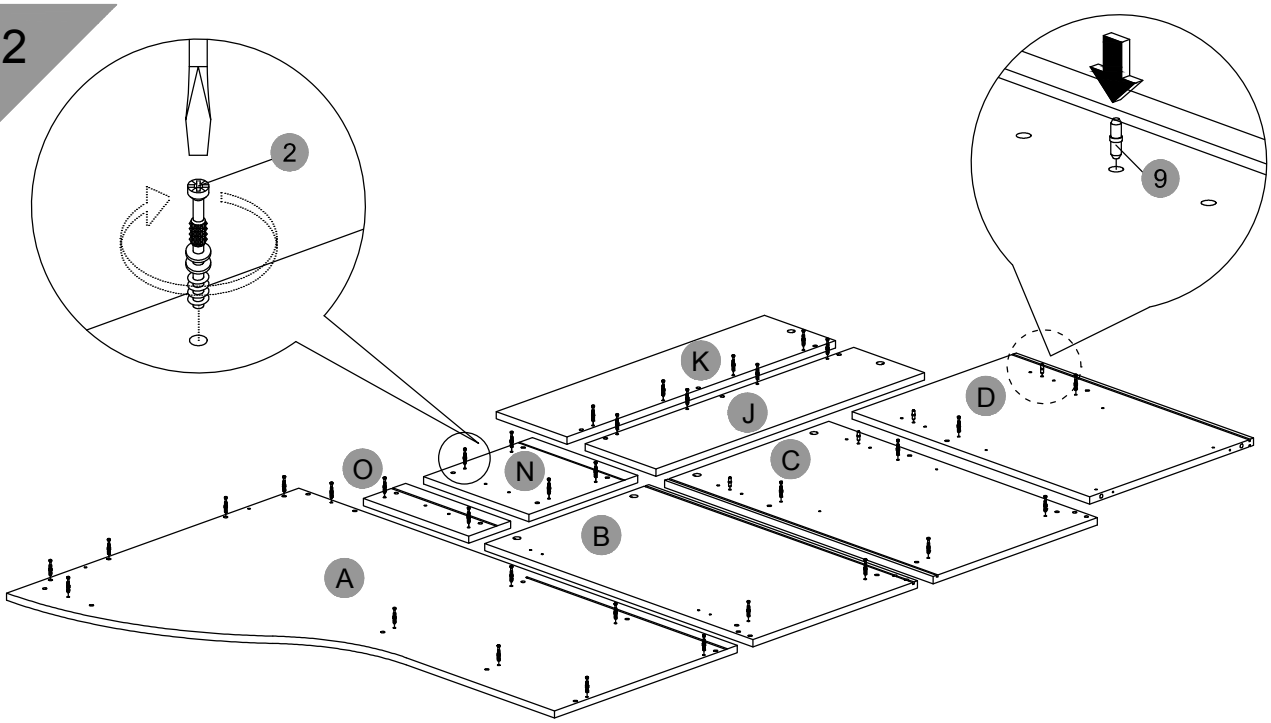

▪ Attach all the bolts (2) to panels (A), (B), (C), (D), (N), (O), (J) & (K) as shown above. Then Attach Metal Pin (9) to panels (C), & (D) as shown above.

3

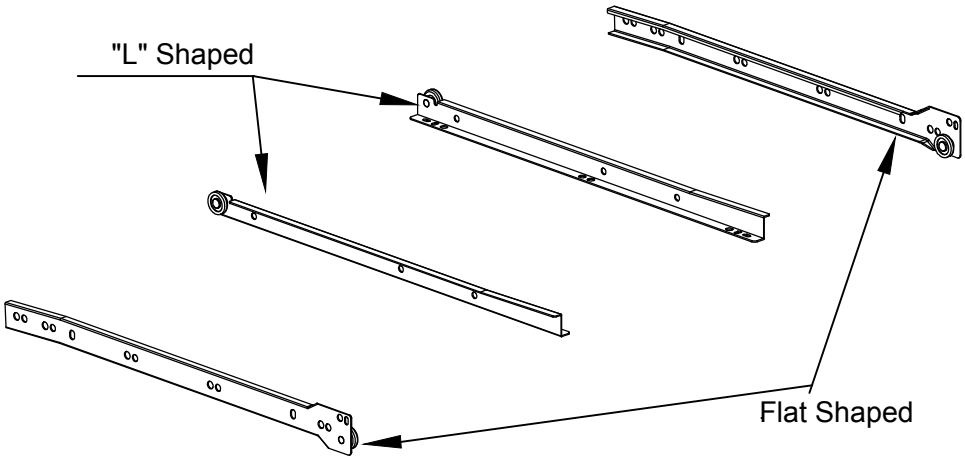

Separate the 8 pieces of the sliders (12) according to their shape:
- The flat shaped will be used in the next step (4 pieces, both left and right).
- The “L” shaped will be used until step 15 (4 pieces, left and right).

4

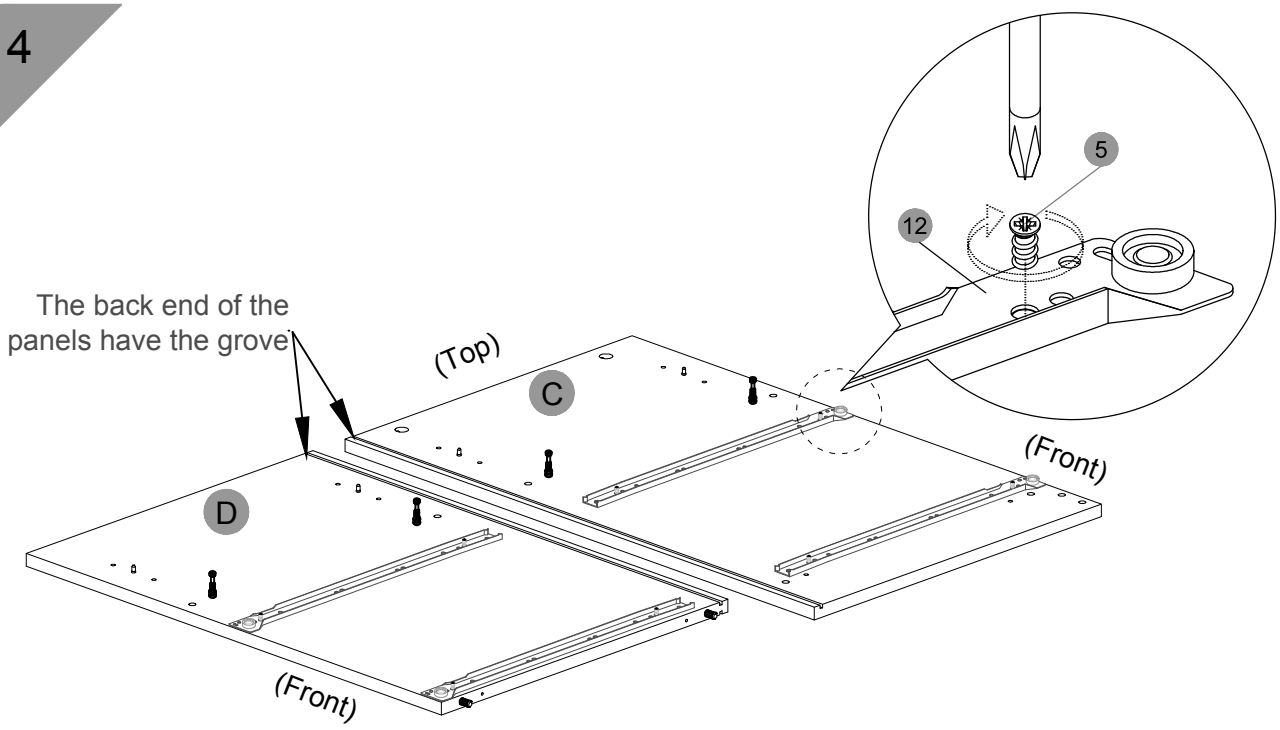

- Install the flat shaped sliders (12) on panels (C) and (D) using screws (5) as shown.

5

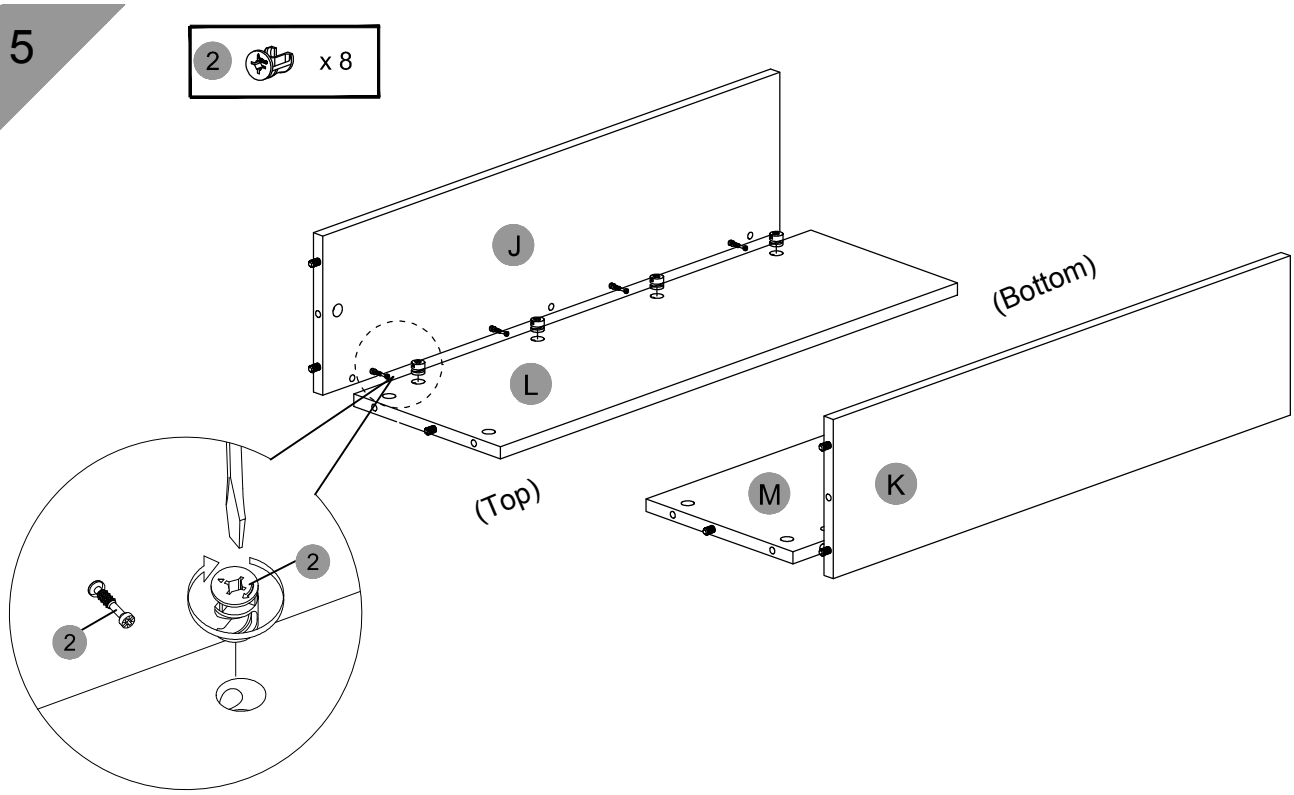

- Assemble the leg panels (J) to (L) and (K) to (M) using Cam locks and bolts (2) as shown and as explained in Page 4.

6

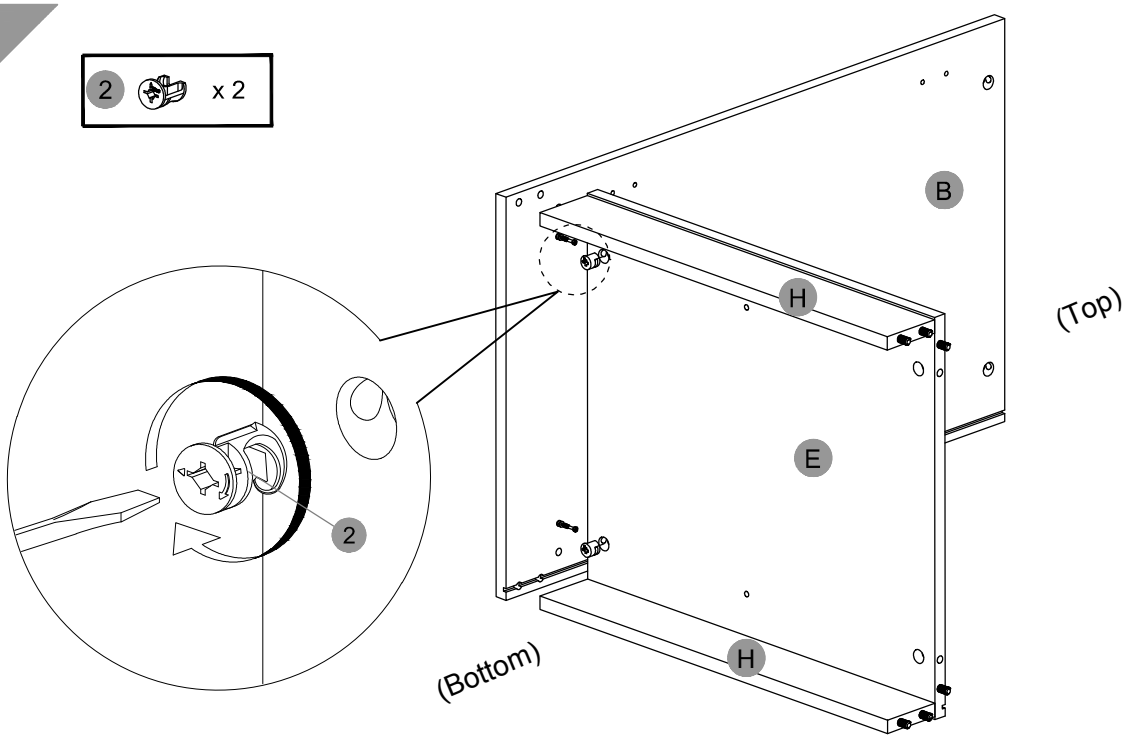

- First assemble the bottom panel (E) to the left panel (B) using cam locks (2) as shown and explained in page 4, then install the leg panels (H) to the left panel (B) as shown.

7

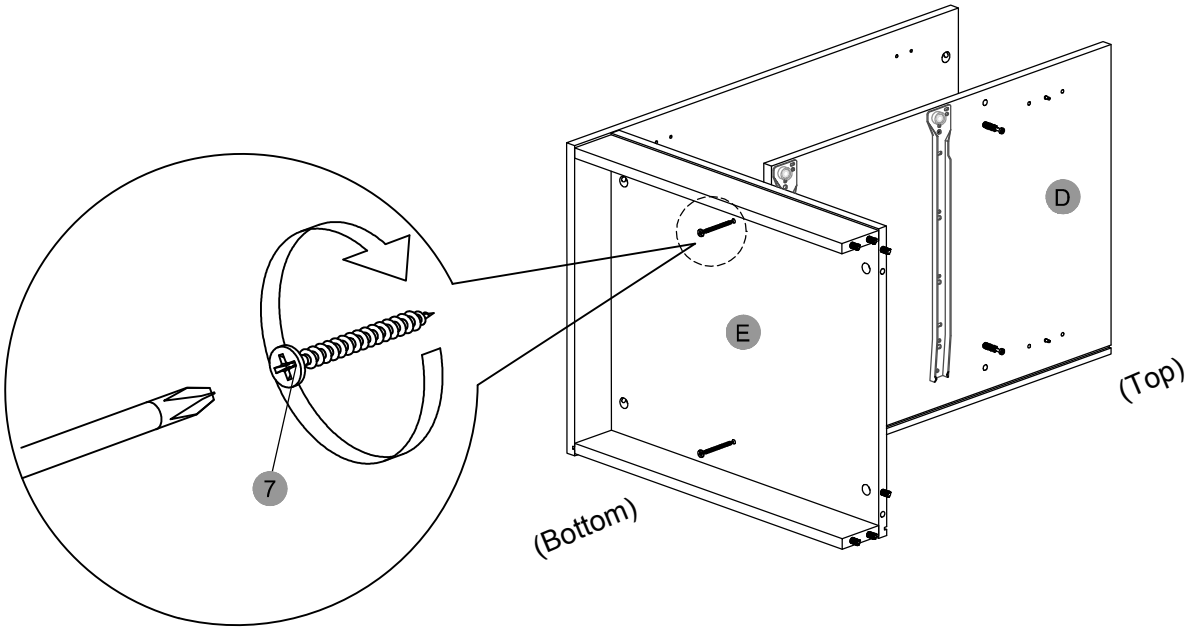

- Assemble the middle panel (D) to the bottom panel (E) using screws (7) as shown

8

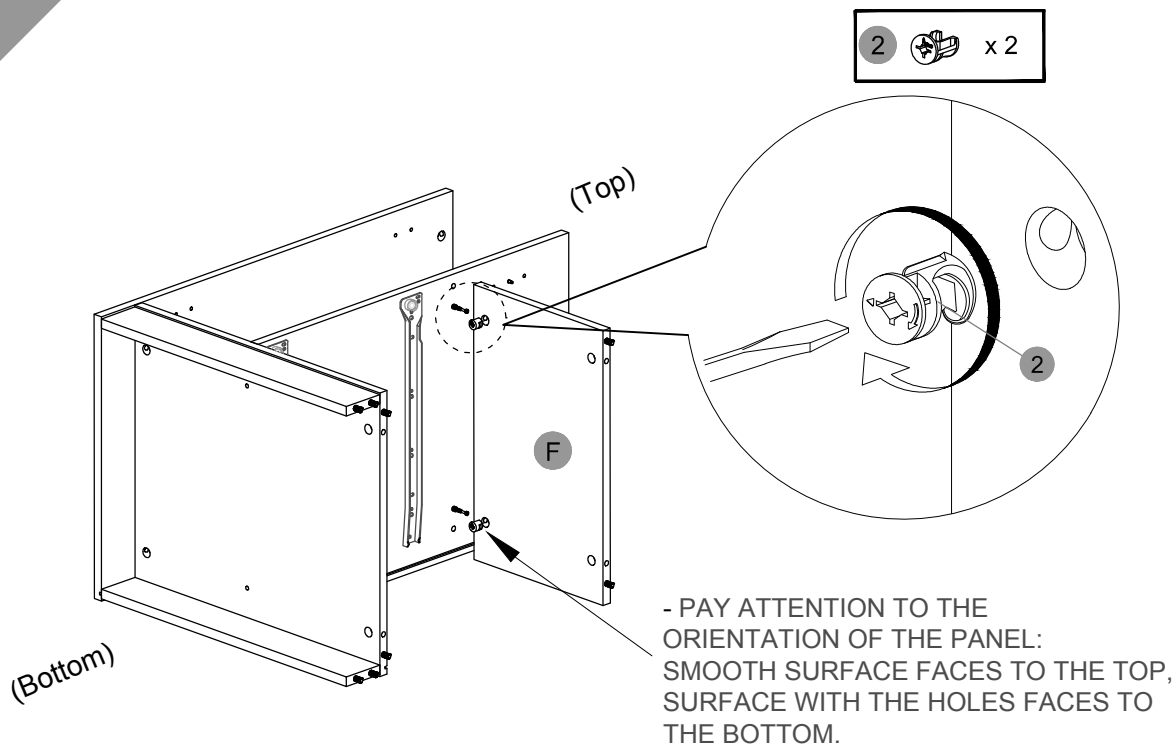

- Assemble the partition panel (F) to the middle panel (D) using cam locks (2) as shown and explained in page 4.

9

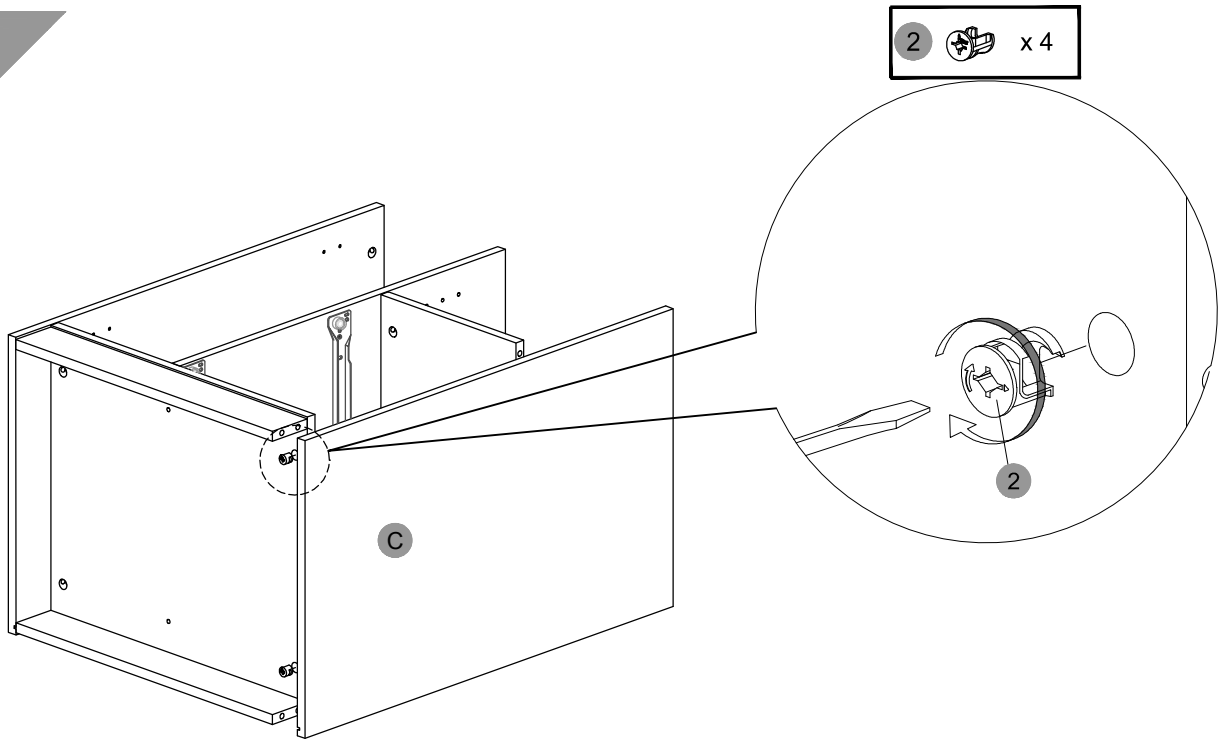

- Assemble the right panel (C) to the bottom panel (E) and the partition panel (F) using cam locks (2) as shown and explained in page 4.

10

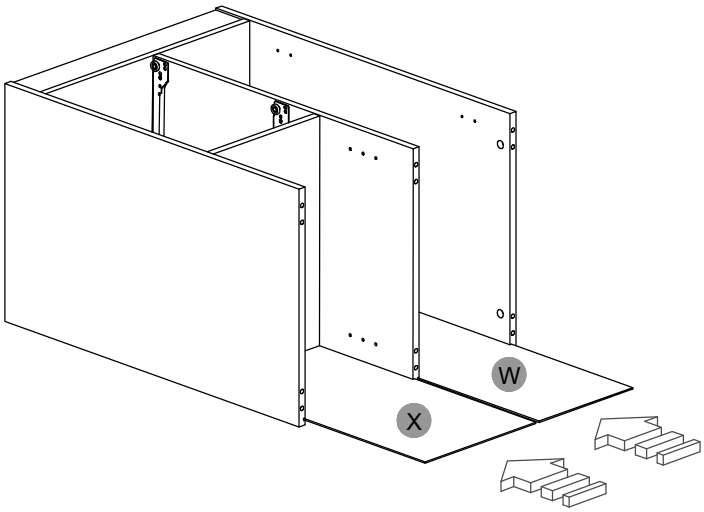

- Insert the back panels (W) and (X) into the groves of the panels (B), (C), (D) and (E) as shown.

11

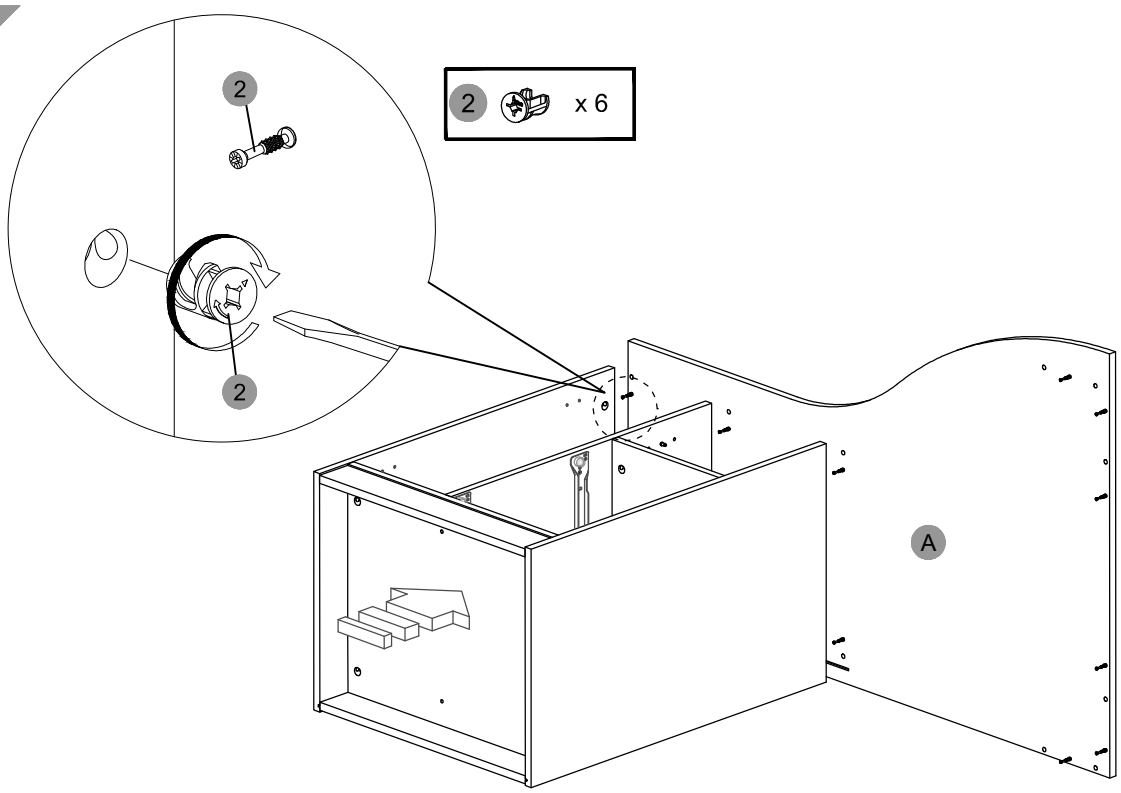

▪ Assemble the main panel (A) to the panels (B), (C) And (D) using cam locks (2) as shown and explained in page 4.

12

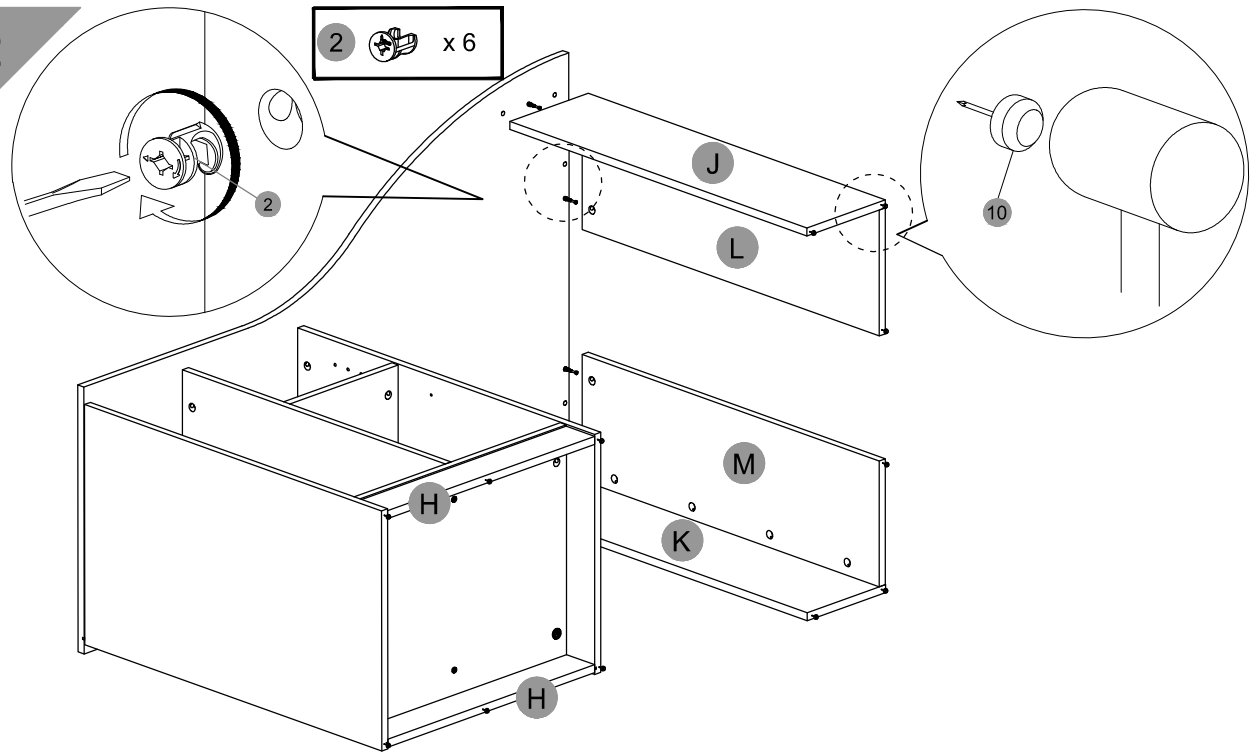

▪ Assemble panel (J) ,(L) ,(M) , & (K) with Cam Lock (2) as shown above. Then attach the plastic feet (10) to the bottom of all panels in their corners and in the middle of panels (H) as shown.

13

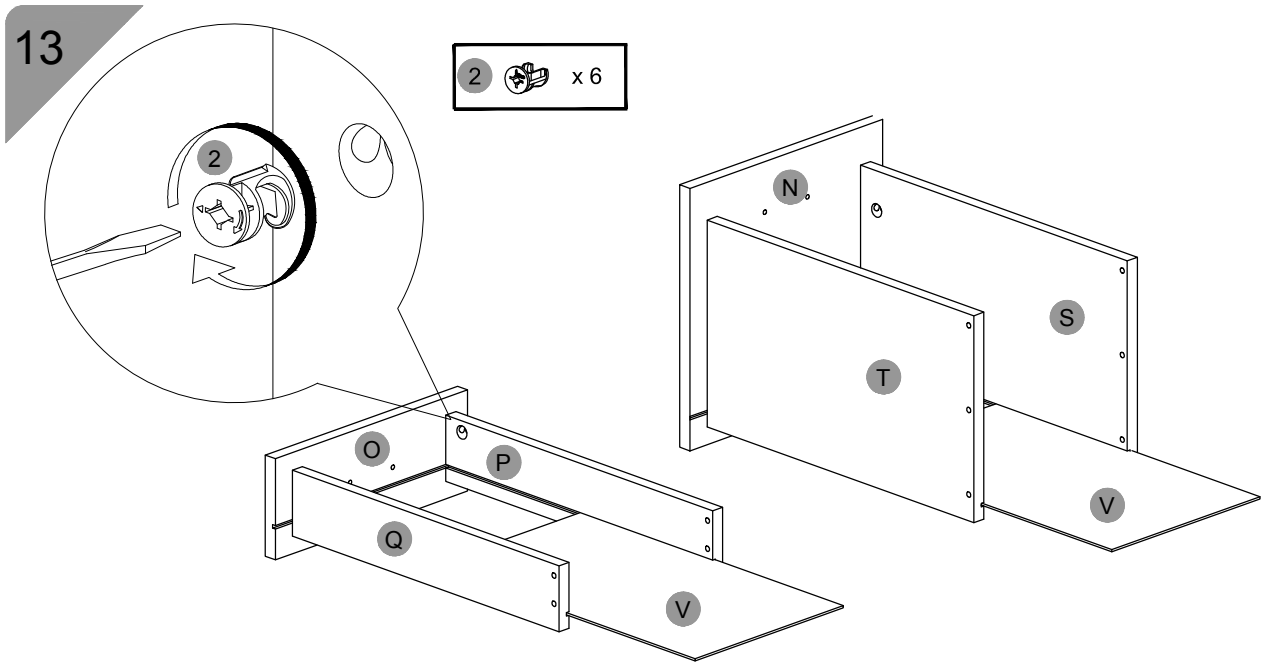

Using cam locks (2), and as shown and explained in page 4, assemble:
- The large drawer side panels (S) and (T) to the large drawer front panel (N).
- The small drawer side panels (P) and (Q) to the small drawer front panel (O).

Then insert the drawer bottom panels (V) in the groves of all panels on each drawer as shown.

14

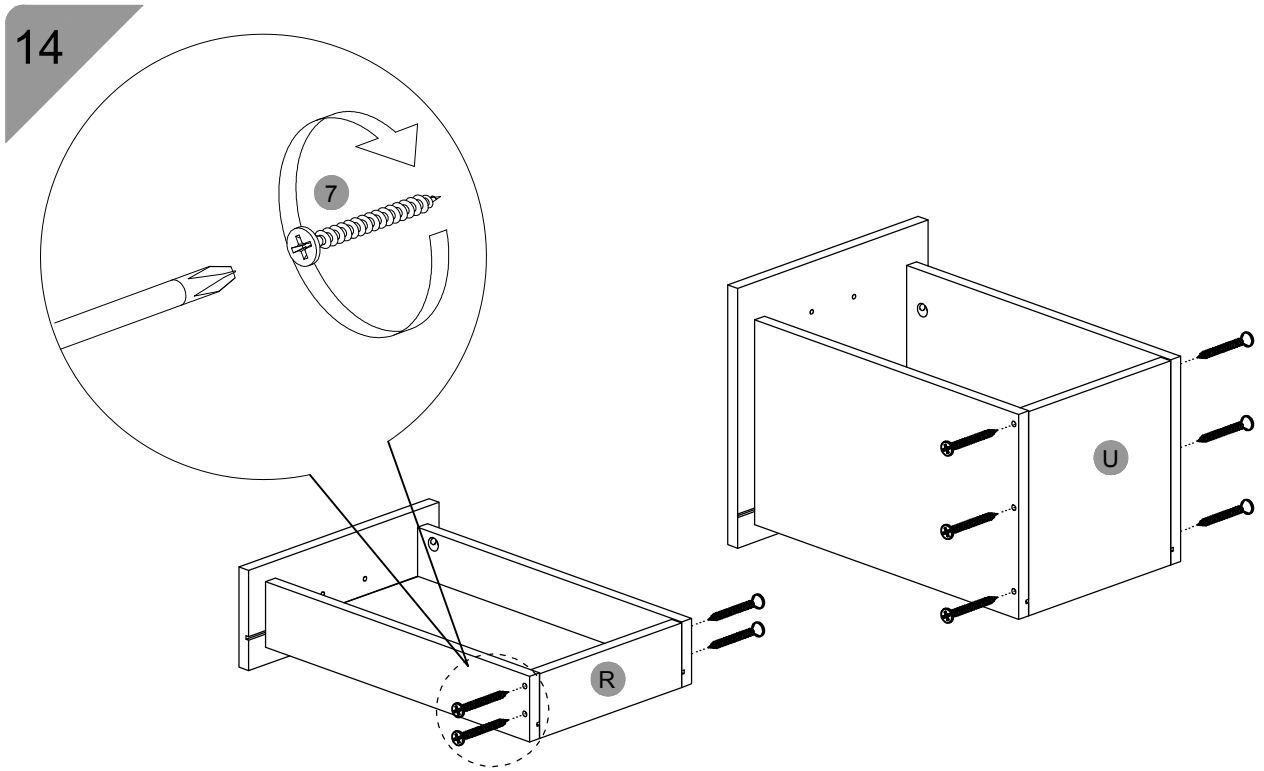

▪ Assemble the drawers back panels (R) and (U) to their respective drawers using screws (7) as shown.

15

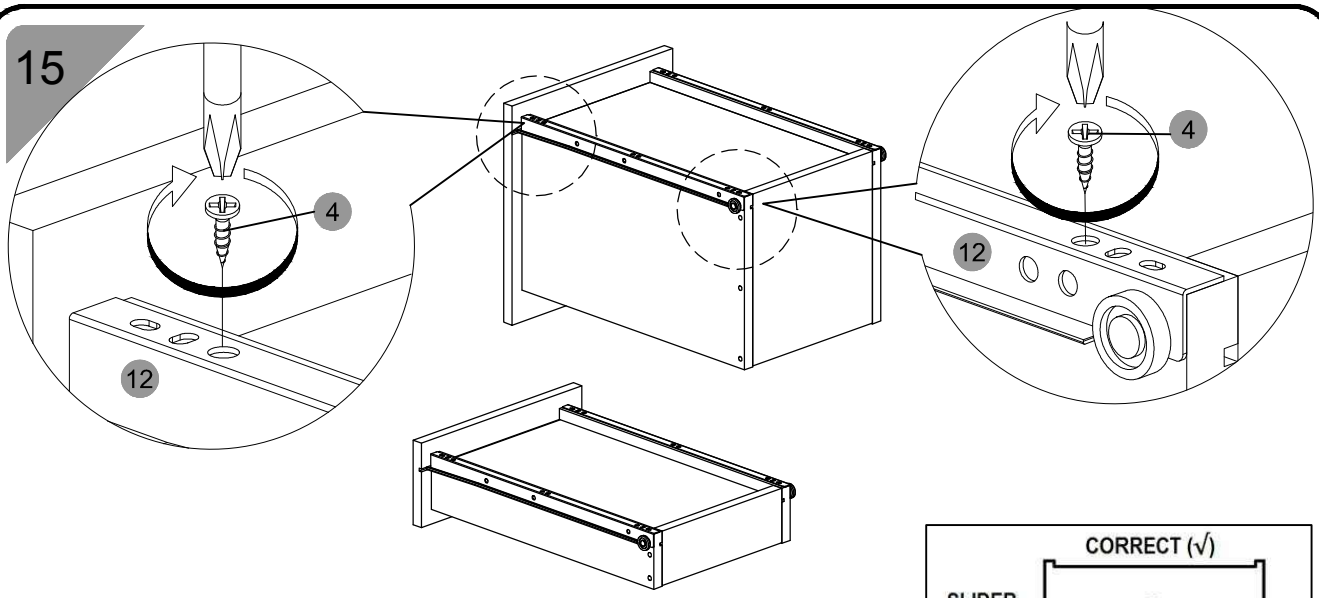

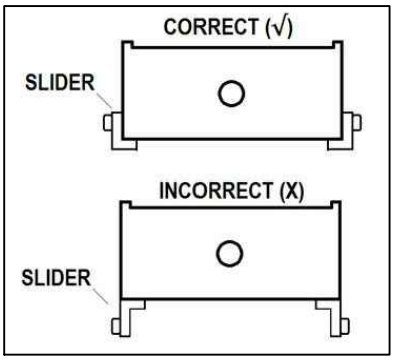

▪ Place the drawers upside-down and assemble the “L” shaped sliders to the bottom using screws (4) as shown.
Please note that the wheels go towards the back of the drawers and the sliders should not protrude from the bottom, otherwise the drawers raise 3/4” and will not fit in the unit.

16

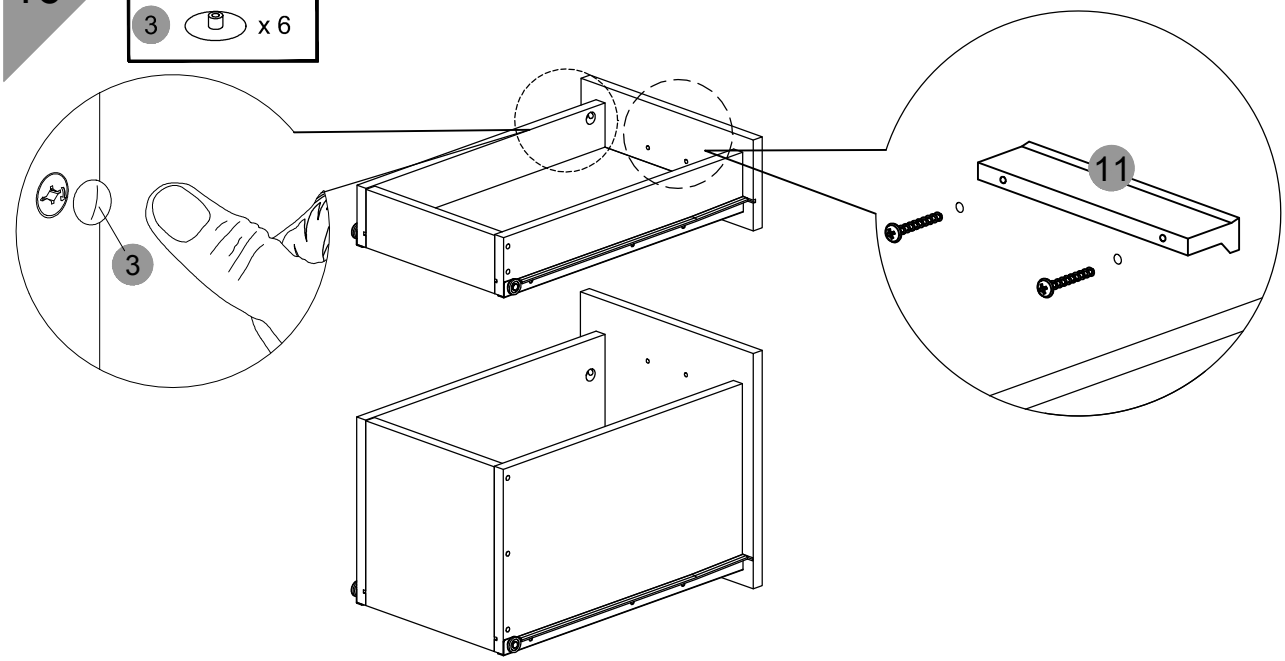

- Install Handle set (11) to both drawers, Then attach Hole Covers (3) to both drawer side panels (P) , (Q) , (S) & (T) as shown above.

17

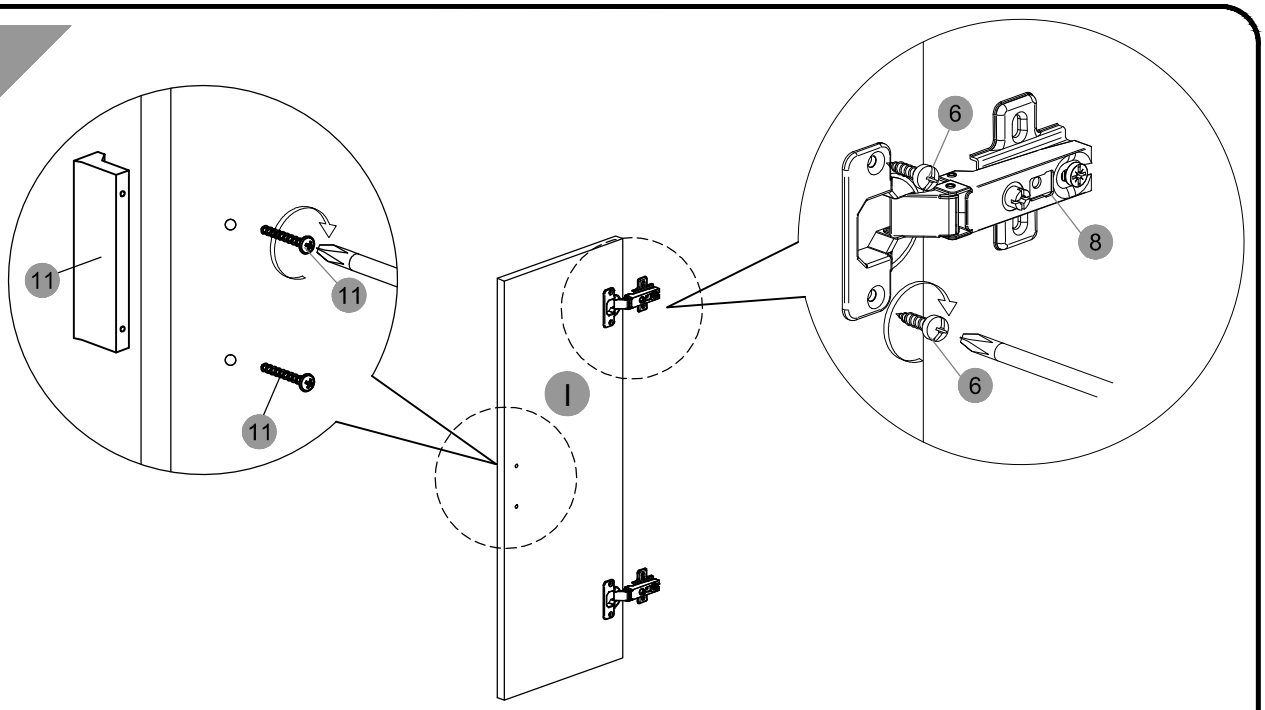

- Install Handle Sets (11) to door (I) , then install Hinges (8) with screw (6) as shown above.

18

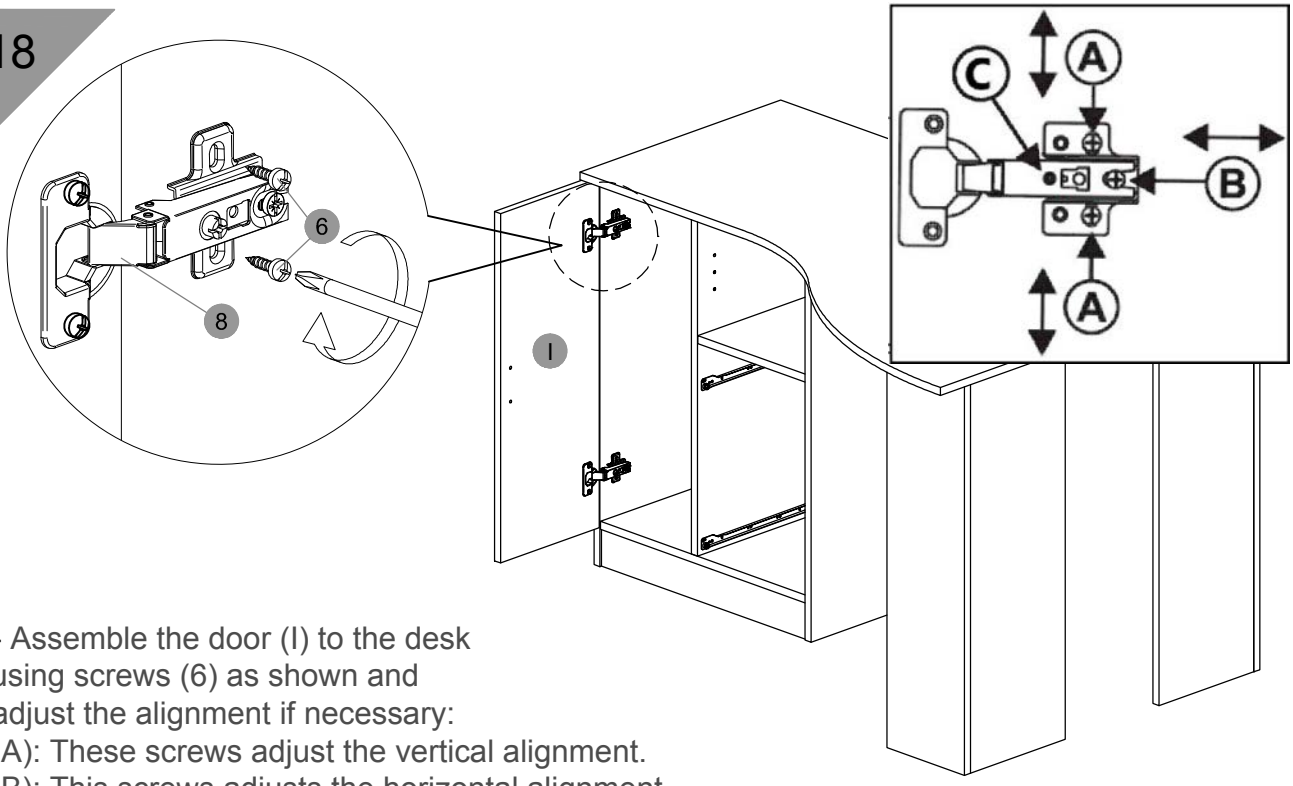

- Assemble the door (I) to the desk using screws (6) as shown and adjust the alignment if necessary:
(A): These screws adjust the vertical alignment.
(B): This screws adjusts the horizontal alignment.
(C): This screws adjusts the depth.

19

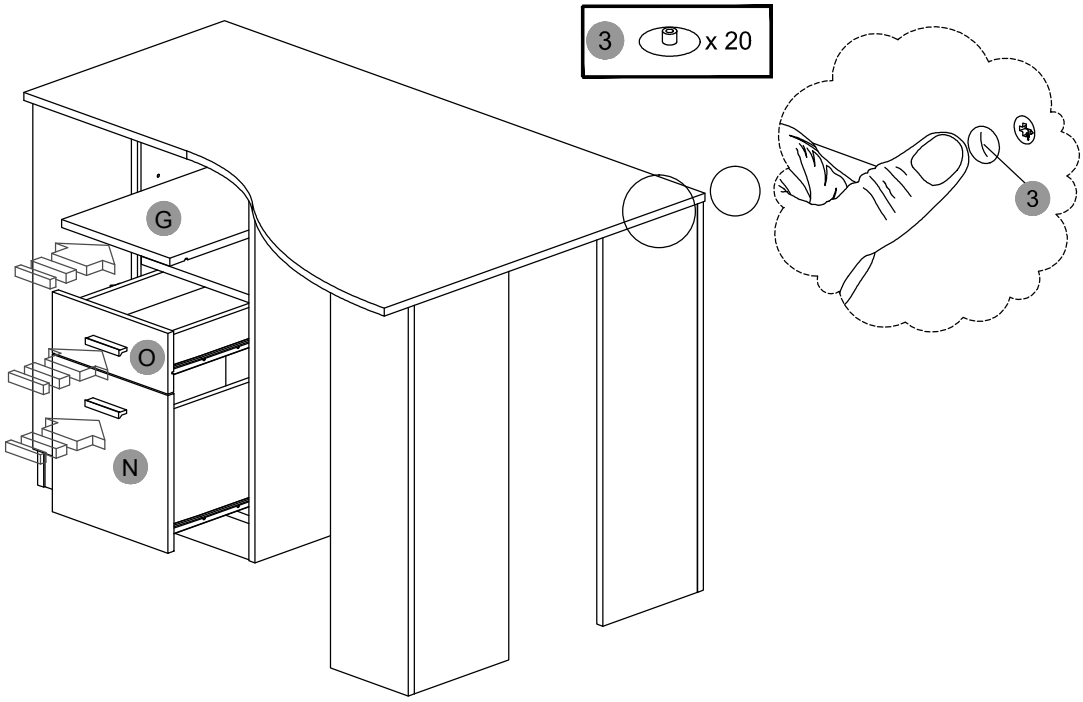

- Place both drawers and the Adjust Panel (G) into the cabinet as shown, then attach Hole Covers (3)

DONE! Before you start using, please read all the warnings in the next page.

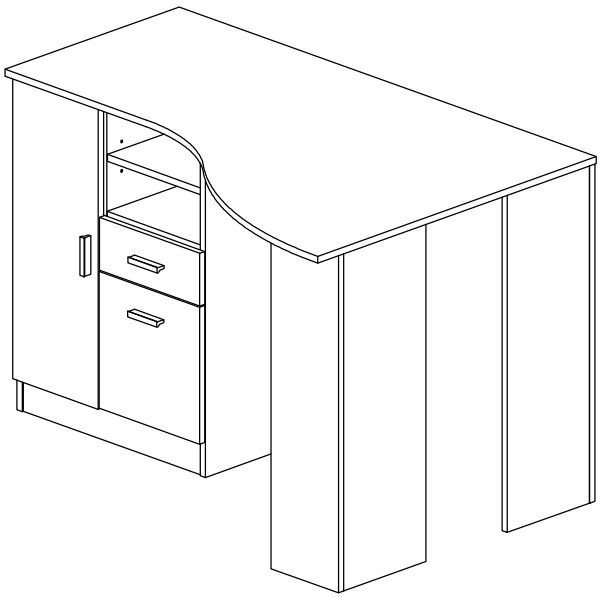

Enjoy your new unit!

⚠ AFTER THE ASSEMBLY IS DONE, PLEASE READ THE FOLLOWING WARNINGS FOR CARE AND MAINTENANCE:

WEIGHT LIMIT :

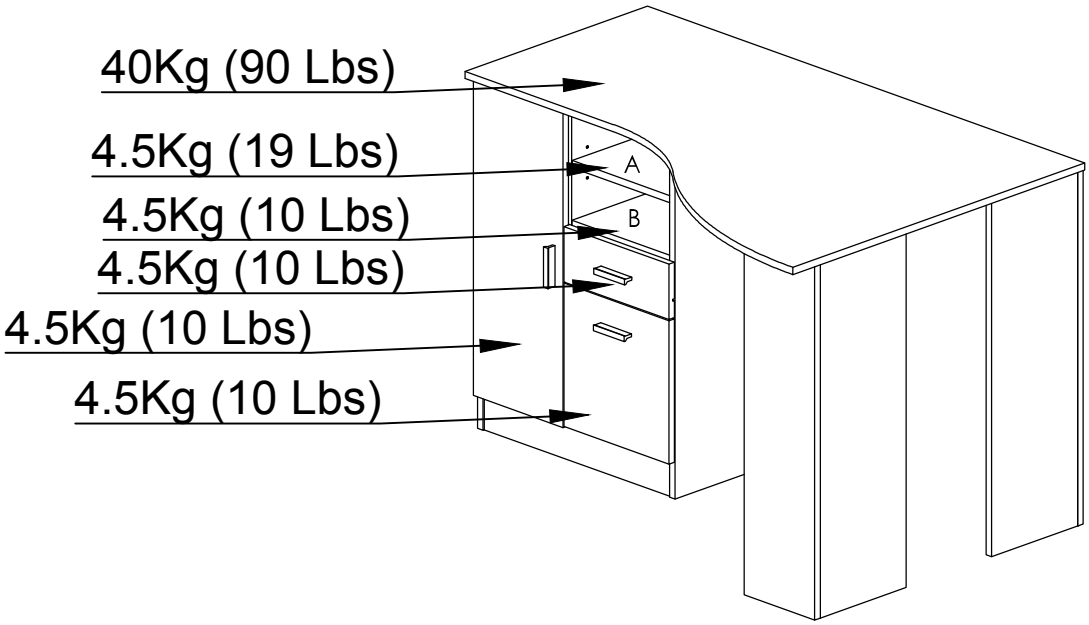

Do not exceed the weight limits.
Do not expose the surfaces to direct sunlight or to extreme environmental conditions.
Clean the surfaces preferable with a soft cloth damped with a solution of mild soap and water, then dry with a clean towel.
If you decide to apply a cleaning agent, first test on a small area of the unit that is hidden from view, for example, under the keyboard panel.
Do not sit on the tabletop.
Do not allow small children to climb over the unit, play underneath, or reach inside the drawers and compartments without your supervision.
Before moving the unit within the same room or to an adjacent room:

a) Remove all objects from the tabletop, drawers and shelves that are heavy or might fall off.
b) The unit must be handled by at least 2 persons
c) Use both of your hands and bend your knees, not your backs.

To transport the unit to a location far away from its current location, it is recommended to properly secure it to avoid breakage during transit.
The warranty does not extend to damages caused by accidents, own errors, incorrect assembly, negligence, improper use, modifications, or not heeding the above warnings.
The warranty is valid only within the continental United States. If you reside in Hawaii, Puerto Rico, U.S. Dependencies or other countries, please contact the supplier from where the unit was purchased.
Making any kind of modification to the unit voids the manufacturer’s warranty.
For details on the warranty, please refer to the Warranty Document included with the product, or visit online.