PENDANT LAMP

ASSEMBLY GUIDE

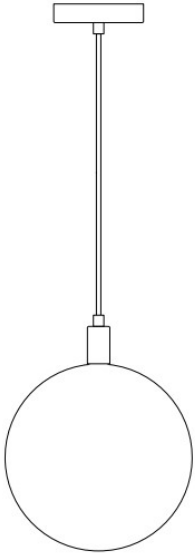

Important - Please read these instructions fully before starting assembly

SAFETY AND CARE ADVICE

NO POWER TOOLS

SAFETY AND CARE ADVICE

- Check you have all the components and tools listed.
- We recommend seeking assistance from a qualified electrician for this installation.
- The lamp must be protected by a 3 amp fuse in the main plug. This lamp can only be used with a 220V~240V 50Hz power source
- Intended for indoor use and must not be used in bathrooms or near any liquids
- Do NOT turn on or use with product until it has been completely assembled and the light bulb has been installed. During assembly or maintenance, make sure
- the lamp is disconnected from the mains.
- Under no circumstances must this light fixture be covered with any type of material or have anything hung from any part of the lamp. Covering the lamp could pose a safety hazard.
- If the external flexible cord or switch of the lamp is damaged, do NOT use the lamp under any circumstances.
- Waste electrical products cannot be disposed of with normal household waste. Please check with your local authority for your nearest recycling centre that accepts electrical products.
- When replacing the light bulb, make sure the lamp is switched off at the mains plug to allow it to cool down. (CAUTION: light bulbs get hot during use).
-
- If you have any doubt about installation/use of the lamp, consult a qualified electrician.

IMPORTANT INFORMATION

15 MINUTE BUILD

ONE PERSON

SAFETY AND CARE ADVICE (CONTINUED)

- Make sure to use the correct wattage and type of light bulb for the lamp. Using light bulbs of a higher wattage than the lamp requires can cause a safety hazard and may cause damage to the lamp. Lamp requires:

  G9 1 x MAX.20W
  G9 1 x MAX.7W
  220-240V~50Hz

  (bulbs not inclued)

- Always shut off power to the circuit before starting installation work.
- This fitting must be earthed.
- Connect the earth conductor of your house wiring (normally bare or with Green/ Yellow sleeving) to the earth terminal of the fitting marked “E”, “Earth” and/or coloured Green/ Yellow. Connect the switched live conductor of your house wiring (normally Brown or Red) to the live terminal or wire which is marked “L” or “Live” and/or coloured Brown. Connect the neutral conductor of your house wiring (normally Blue or Black) to the neutral terminal or wire which is marked “N” or “Neutral” and/or coloured Blue.
- Double check all the connections are secure and that no loose strands of wire are left out of the connector.
- The minimum distance from lighted object is 0.3M.
- The weight of the lamp must be taken by the suspension wire. When adjusting the cable make sure that it is longer than the wire.
- Incorrect assembly and/or use of the lamp will void the warranty.

furniturebox

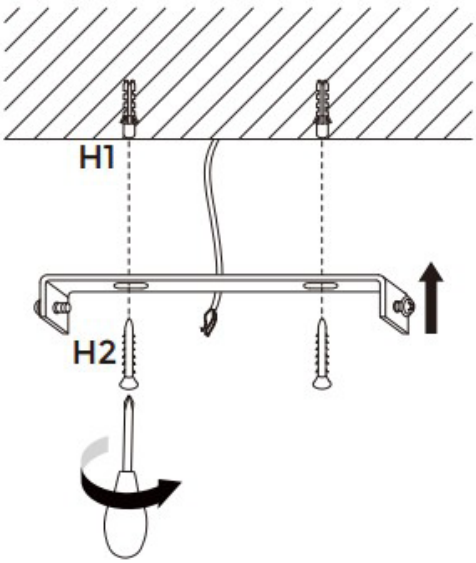

We recommend you seek professional assistance from a qualified electrician for this installation.

STEP 1

Attach the bracket to the ceiling around your electrical wiring. Use 2x raw plugs H1 and 2x screws H2 to secure bracket.

STEP 2

Wire in the pendant as shown.

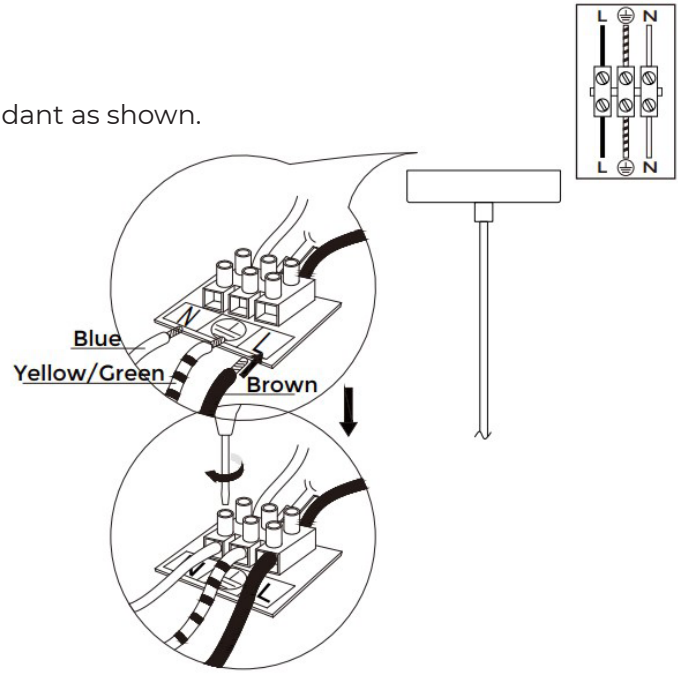

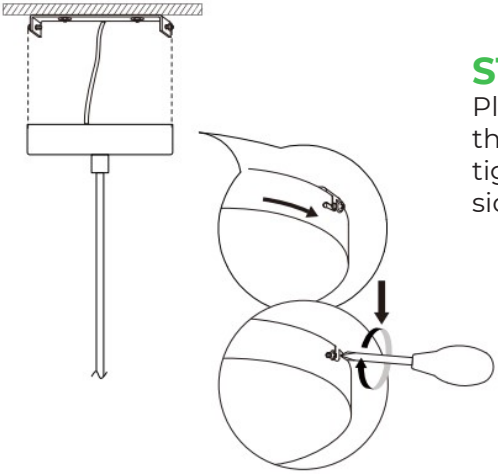

STEP 3

Place the pendant cap over the bracket and secure by tightening the screws on either side into the bracket.

STEP 4

Carefully insert the bulb into the socket. You will need 1x G9 bulb (not included). Be careful to align the pins of the bulb into the socket holes.

STEP 5

Carefully place the lampshade over the bulb and twist to secure.

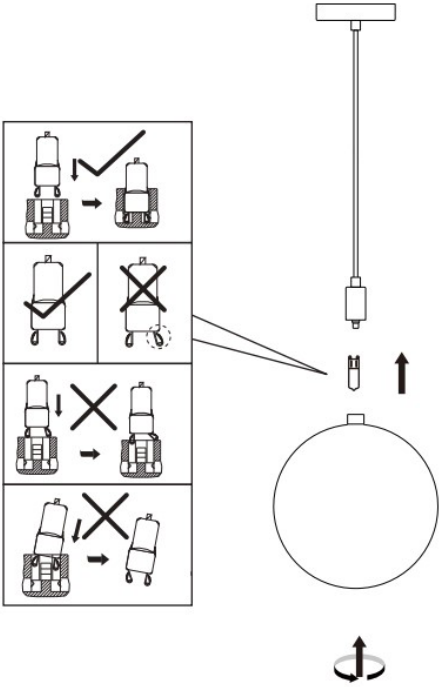

NOTE: The quantities above are the correct amount to complete the assembly. In some cases more fittings may be supplied than are required.

2 YEAR GUARANTEE

OUR 2 YEAR* GUARANTEE

our products come with a 2 year guarantee to give you peace of mind shopping

*excludes some garden furniture items which have a 1 year guarantee

WHAT THE GUARANTEE COVERS

PRE-INSERTED FIXINGS
e.g. loose metal threads

FAULTY JOINTS
e.g. legs bending

EXTERNAL FIXING FAULTS
e.g. bonding/glue

STRUCTURAL INTEGRITY
e.g. the frame of the product