Parker House
FURNITURE

Assembly Instruction

Item No: BOC-347C
Description : 48IN. CREDENZA

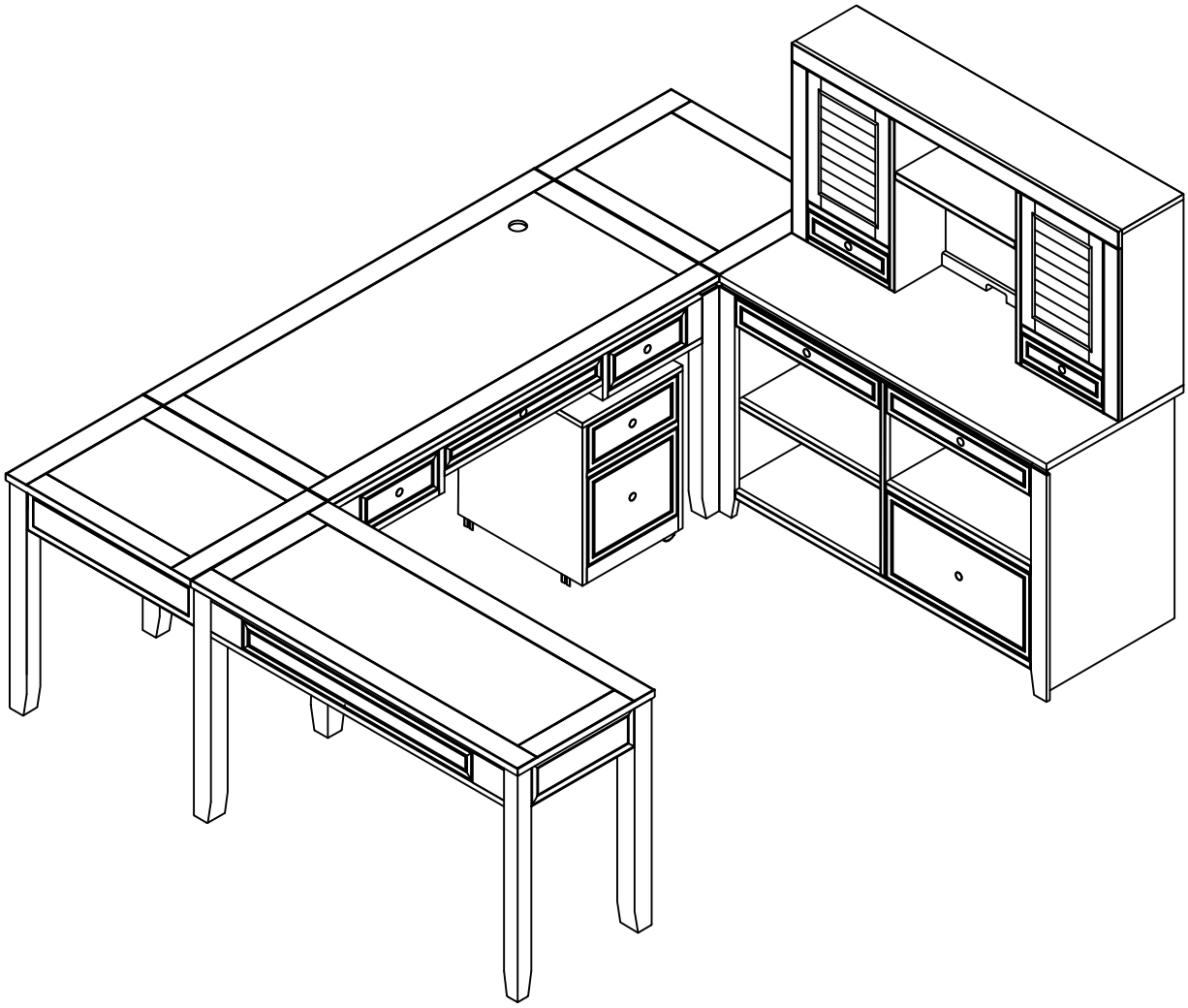

Parker House
FURNITURE

Assembly Instruction

Item No: BOC-347C
Description : 48IN. CREDENZA

HARDWARE LIST

No	Description	Sketch	Q'TY
A	File rods 498mm x Ø7		2PCS

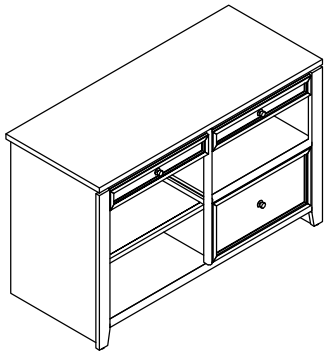

HARDWARE

File rods pack is here

STEP 1

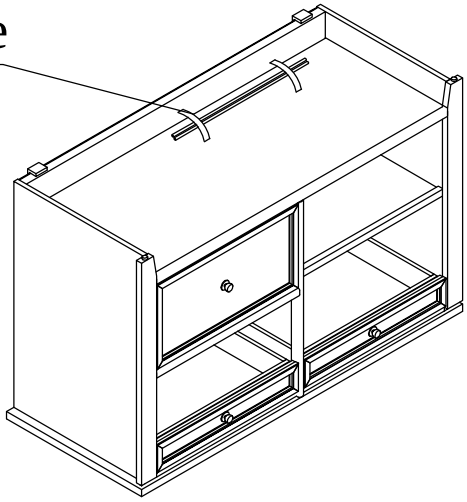

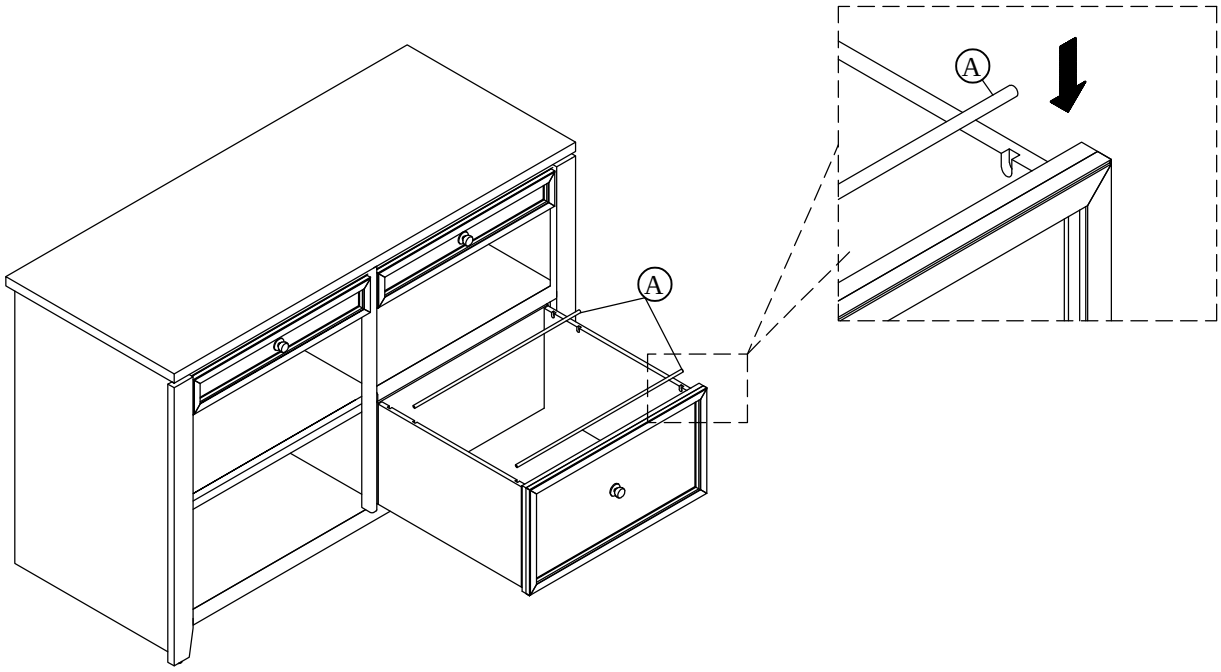

Assembly Instruction

Item NO: BOC-347H

6/10

Hardwares

NO	Description	Sketch	Q'TY
A	Touch up Pen		1pc

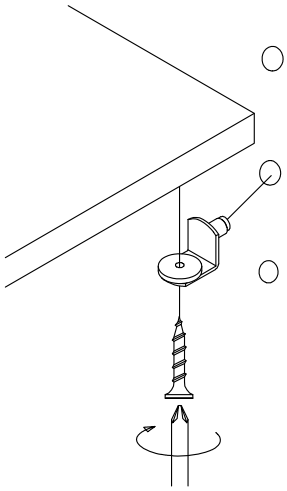

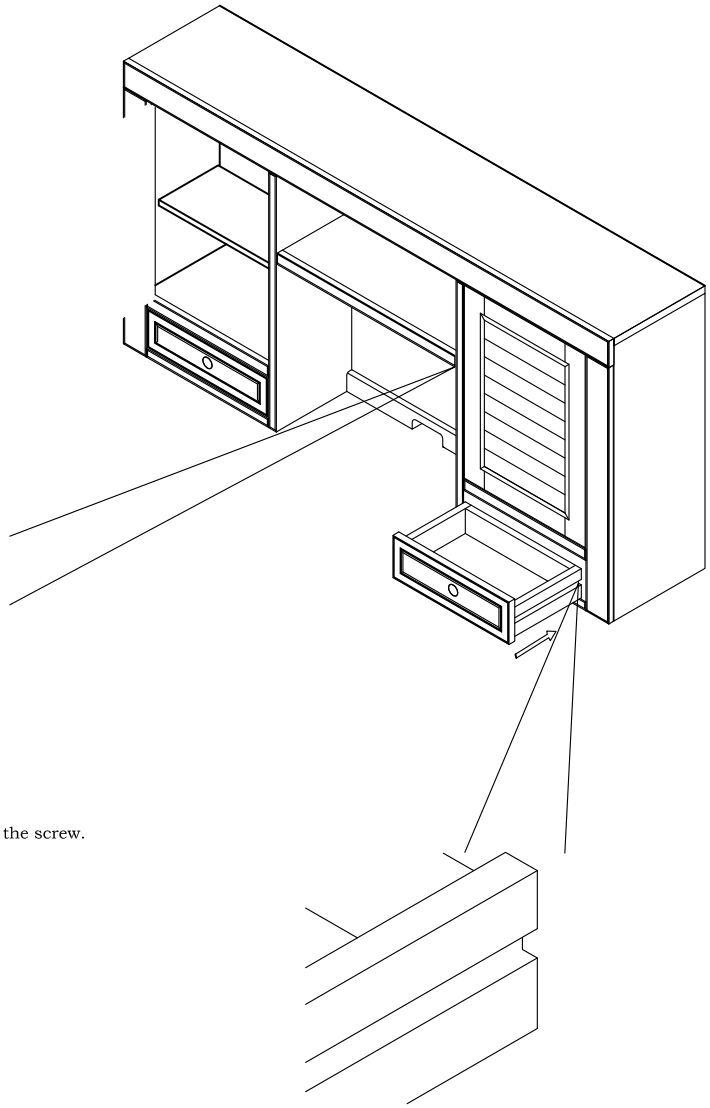

If you want to adjust the shelf, please loosen the screw.