WIN6016

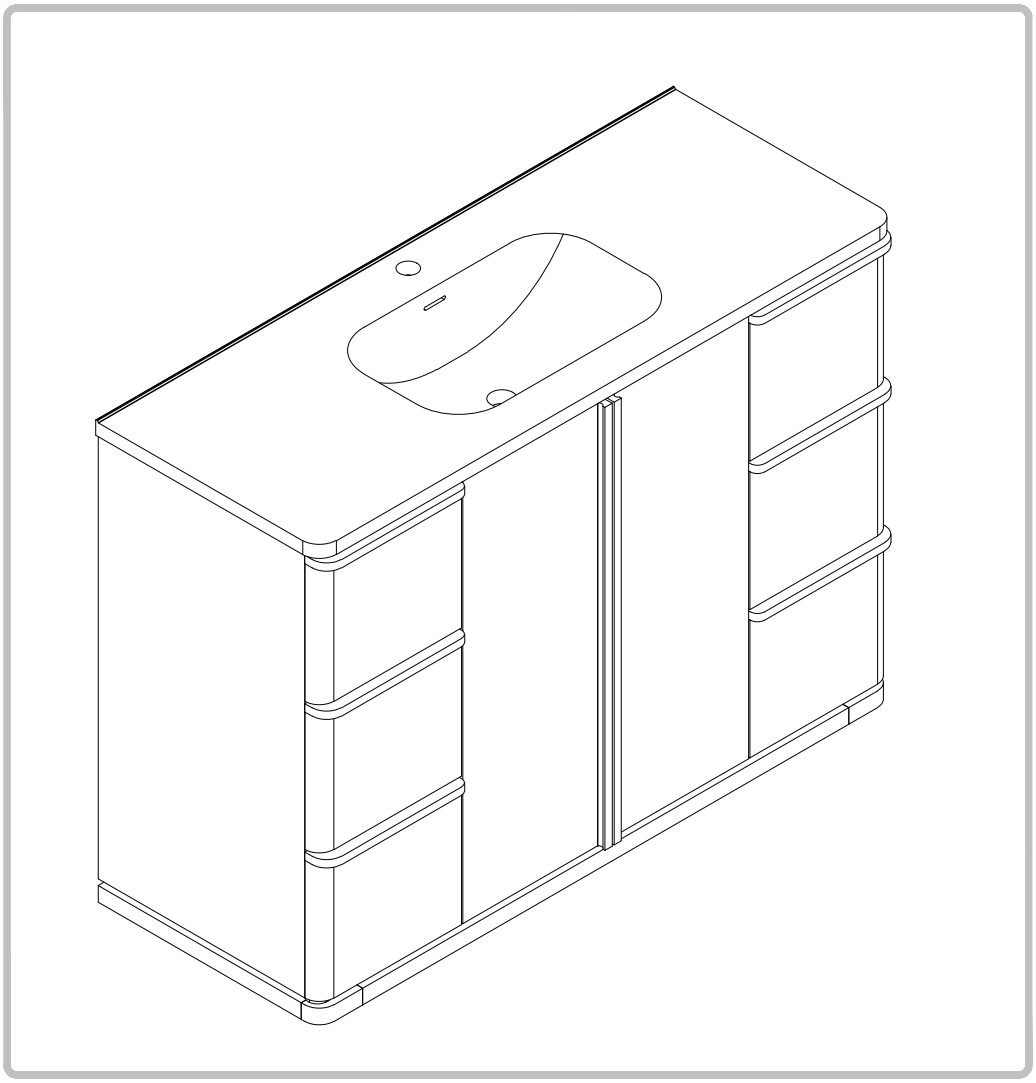

2 ADULTS ASSEMBLY REQUIRED
Se necesitan dos adultos para ensamblar

THIS INSTRUCTION BOOKLET CONTAINS IMPORTANT SAFETY INFORMATION.
PLEASE READ AND KEEP FOR FUTURE REFERENCE.
Date 2026-06-30 Rev. 0001-A

BUYING TIPS By Customer Team



If you have any questions below, please feel free to contact us. We will respond within 24 hours.

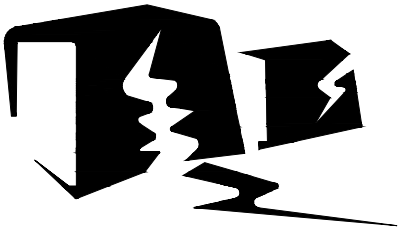

ANY DAMAGE

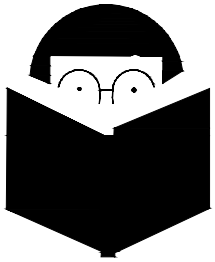

READ INSTRUCTIONS CAREFULLY

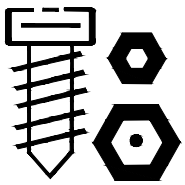

MISS SOME PARTS



OTHER QUESTIONS

Email: Furniture-Service-24Hour@outlook.com

GENERAL INFORMATION, TIPS AND TRICKS

1. Please read the Assembly Instructions prior to assembling this product.
2. Remove all hardware from the box and sort by size.
3. Check to see that all hardware and parts are present BEFORE assembling.
4. Ask a friend to assist you with the assembly of this furniture.
5. To avoid damage, assemble the product on a sturdy, level and protective surface.
6. Please wait until all steps are completed before fully tightening bolts.
7. Make sure all screws and bolts are tightly fastened before the unit is used.
8. CAUTION If you use an electric screwdriver to tighten screws, be careful to slow.
9. stop when the screws are tightened. Failure to do so may result in stripping of the screws.
10. If the installation kit is equipped with anti-tip device, It is recommended to secure the cabinet to the wall with screws after installation to prevent it from falling down.

SAFETYINFORMATION

The accessory bag contains some small accessories , which should be kept away from children.

Kids are not allowed to climb or playwith the product for safety reasons.

NECESSARY TOOLS – YOU WILL NEED THESE TOOLS FOR ASSEMBLY

1.RUBBER MALLET

2.PHILLIPS HEAD SCREW DRIVER

3.FLAT HEAD SCREW DRIVER

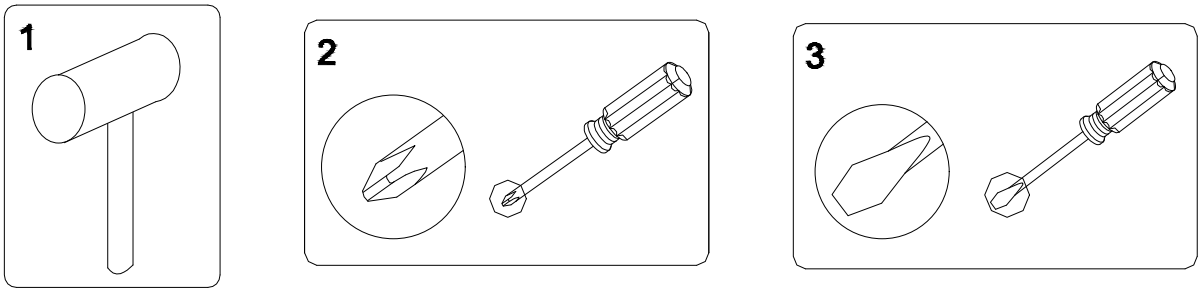

NOW YOU ARE READY TO BEGIN ACTUAL ASSEMBLY!

BOARD IDENTIFICATION

① x 1

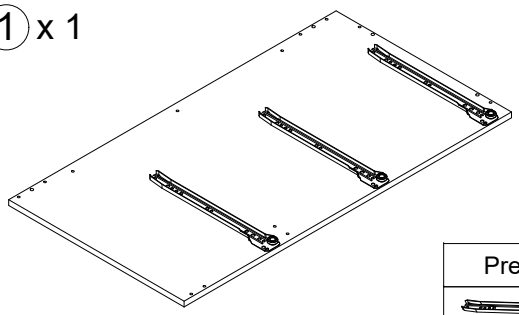

Pre-assembled	
	3
	9

② x 1

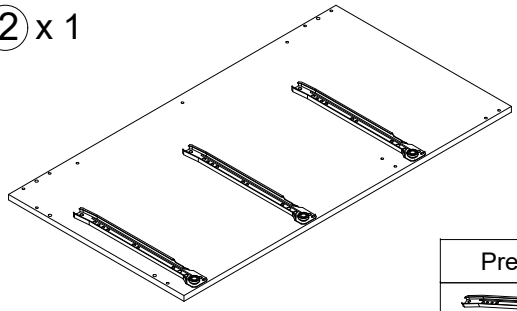

Pre-assembled	
	3
	9

③ x 1

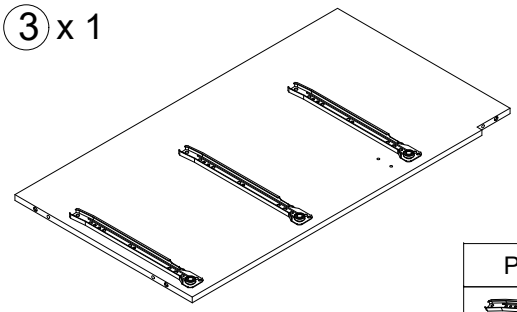

Pre-assembled	
	3
	9

④ x 1

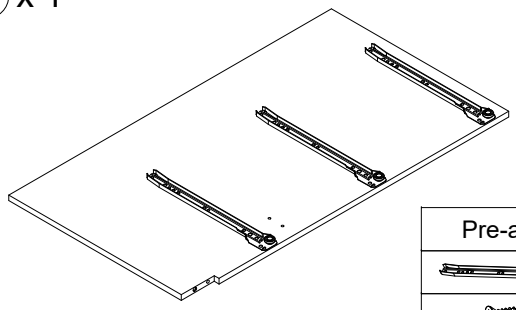

Pre-assembled	
	3
	9

⑤ x 1

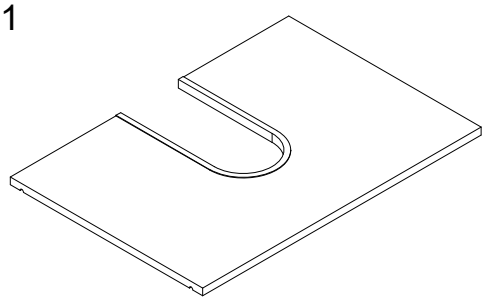

⑥ x 2

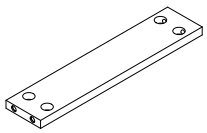

⑦ x 1

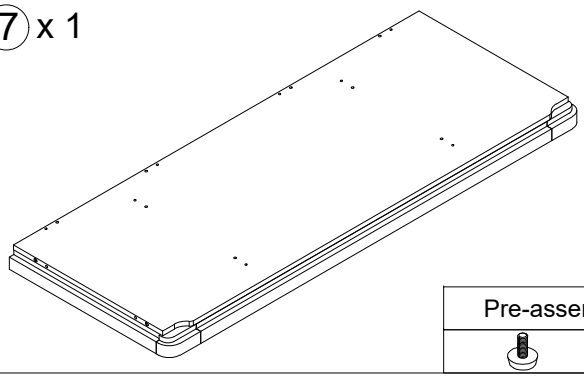

Pre-assembled	
	5

⑧ x 1

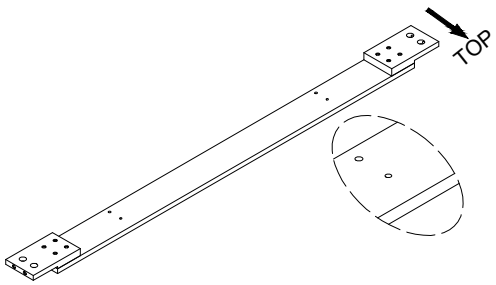

⑨ x 1

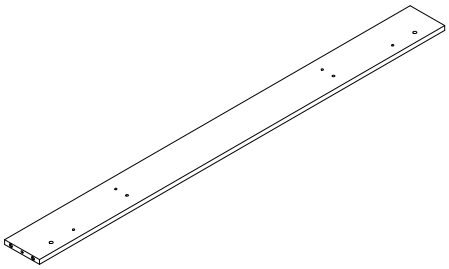

⑩ x 1

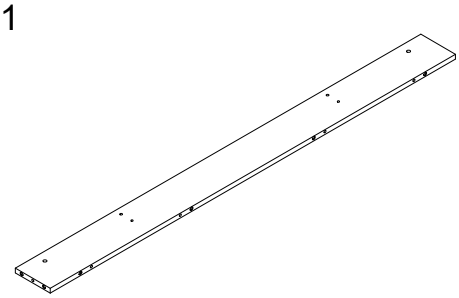

BOARD IDENTIFICATION

(11) x 2

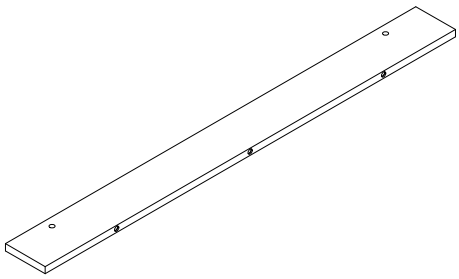

(12) x 2

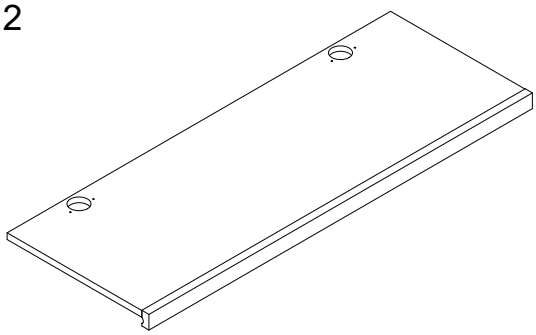

(13) x 3

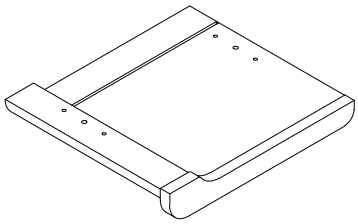

(14) x 6

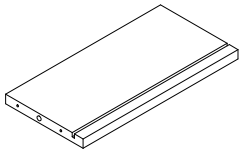

(15) x 6

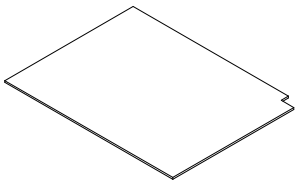

(16) x 3

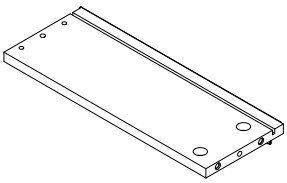

Pre-assembled	
	1
	3

(17) x 3

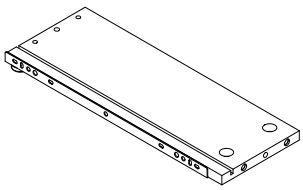

Pre-assembled	
	1
	3

(18) x 3

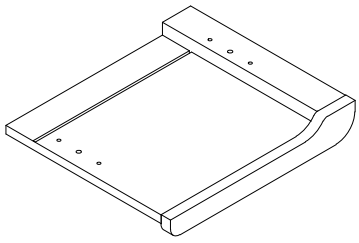

(19) x 3

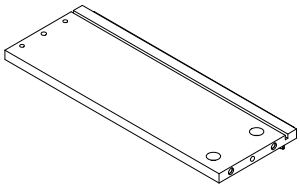

Pre-assembled	
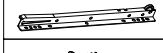	1
	3

(20) x 3

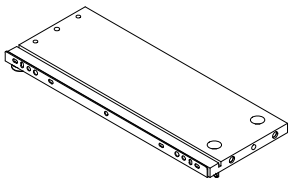

Pre-assembled	
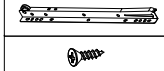	1
	3

BOARD IDENTIFICATION

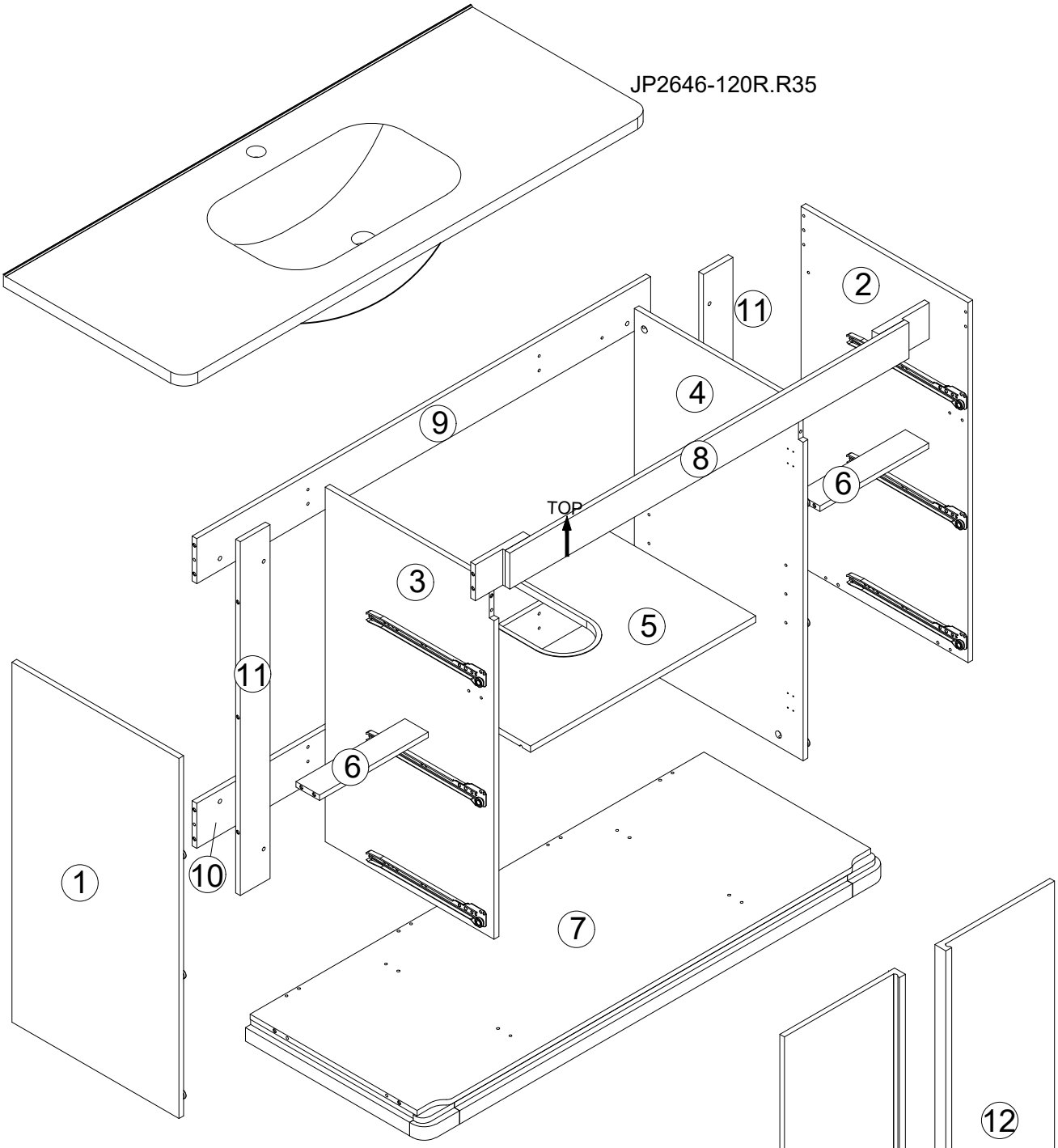

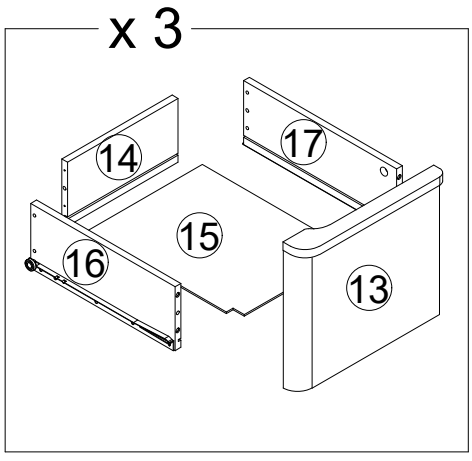

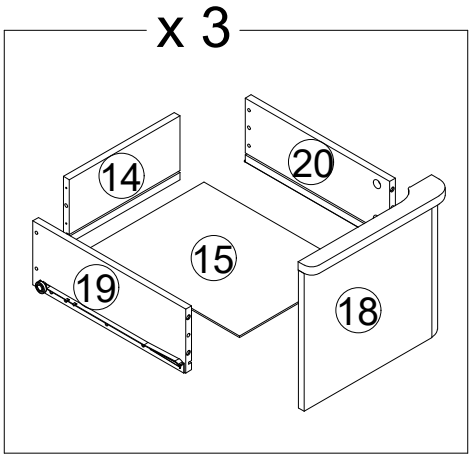

HARDWARE IDENTIFICATION

A 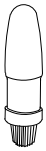 Glue Qty: 2	B 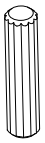 Wood Dowel Ø6*30mm Qty: 46	C 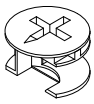 Cam Lock Ø15*9mm Qty: 68	D  Cam Bolt Ø7*34mm Qty: 68	E  Shelf support Qty: 4
F  Screw Ø1/4*22mm Qty: 4	G  Hex Key Qty: 1	H 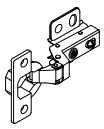 Hinge Qty: 4	I  Screw Ø3.5*12mm Qty: 24	J  Screw Ø4 x 30mm Qty: 24
K  Screw Ø4*50mm Qty: 2	L 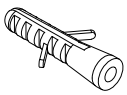 Drywall Anchor Qty: 2	M  Cover Qty: 38		

TOOLS REQUIRED



Silicone (not included) is required for installing the vanity top onto the vanity body.



A Electric drill (not included) is required.

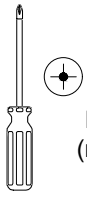

Phillips screwdriver (not included) is required.

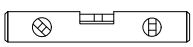

A level (not included) is required.



A Hammer (not included) is required for assembly.

CAM LOCK SYSTEM OPERATION

NOTE: When inserting the Cam Lock,make sure that the Open End of the Cam Lock faces the Cam Screw Entry. The Dowel will be inserted in the hole NEXT to the Cam Lock/Cam Screw Hole.

NOTE: The Cam Lock is backwards in this illustration.The Cam Screw can not connect to the Cam Lock because the Dowel is in the incorrect hole.

NOTE: To tighten, turn the Cam Lock CLOCKWISE until the arrow point AWAY from the connected Panel.

NOTE: DO NOT USE AN AUTOMATIC SCREWDRIVER TO TIGHTEN CAM LOCKS,DO NOT OVER-TIGHTEN.

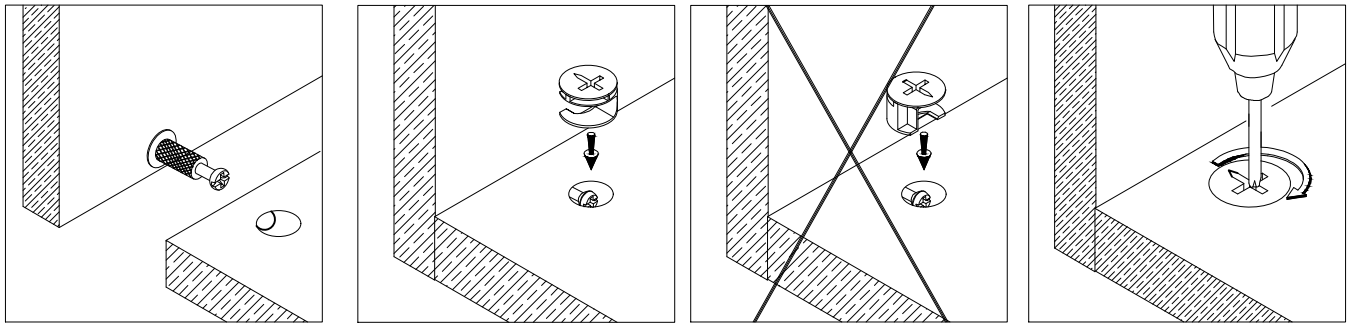

IMPORTANT

Before you begin: Open, identify and count all parts prior to assembly. Lay out parts on a flat and non-abrasive surface.
NOTE: IT IS VERY IMPORTANT TO USE GLUE WITH THE DOWELS. EXCESS GLUE CAN BE WIPED OFF WITH A DAMP CLOTH.
Insert Dowel at least half way by tapping lightly with a rubber mallet (not included), IF NECESSARY.

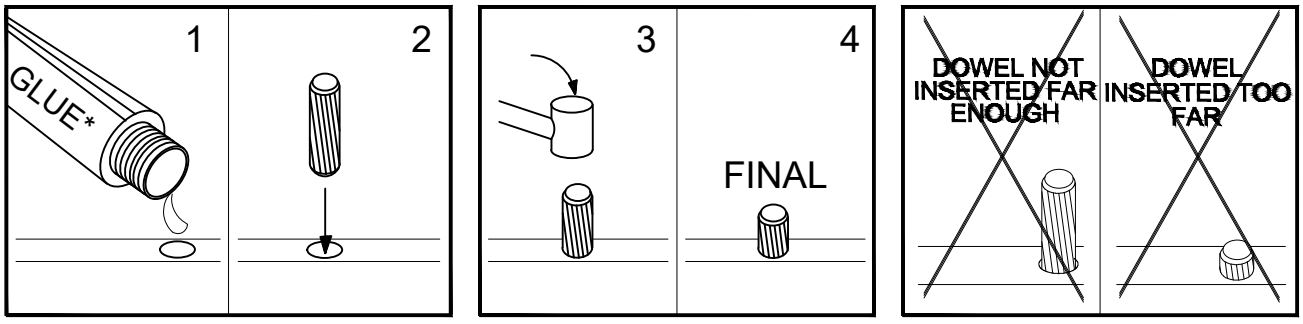

STEP 1

●Unpack the unit and confirm that you have all the hardware and required parts.
●Assemble the unit on a carpeted floor or the empty carton to avoid any scratches.

B 18 x

D 10 x

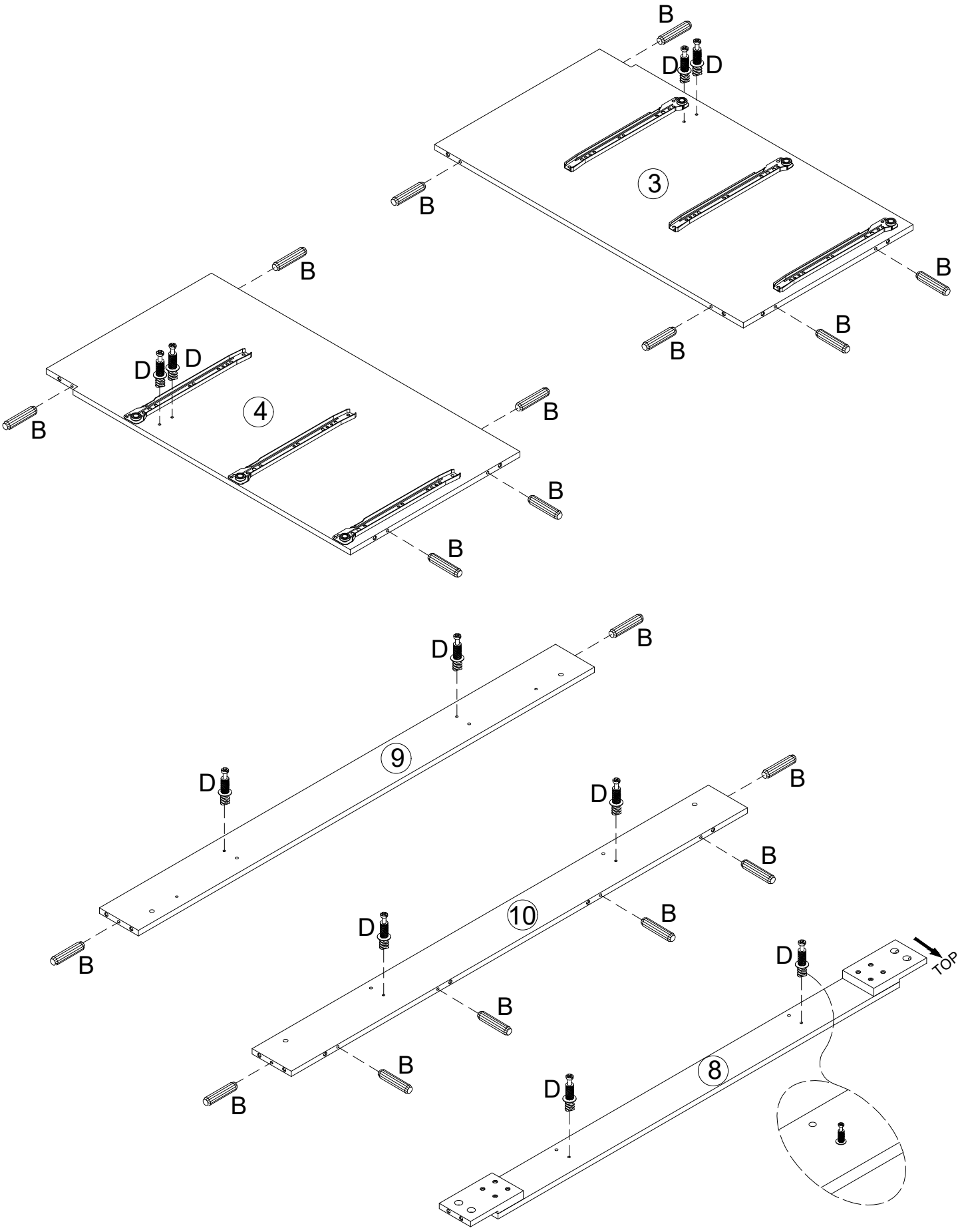

STEP 2

C 2 x

M 2 x

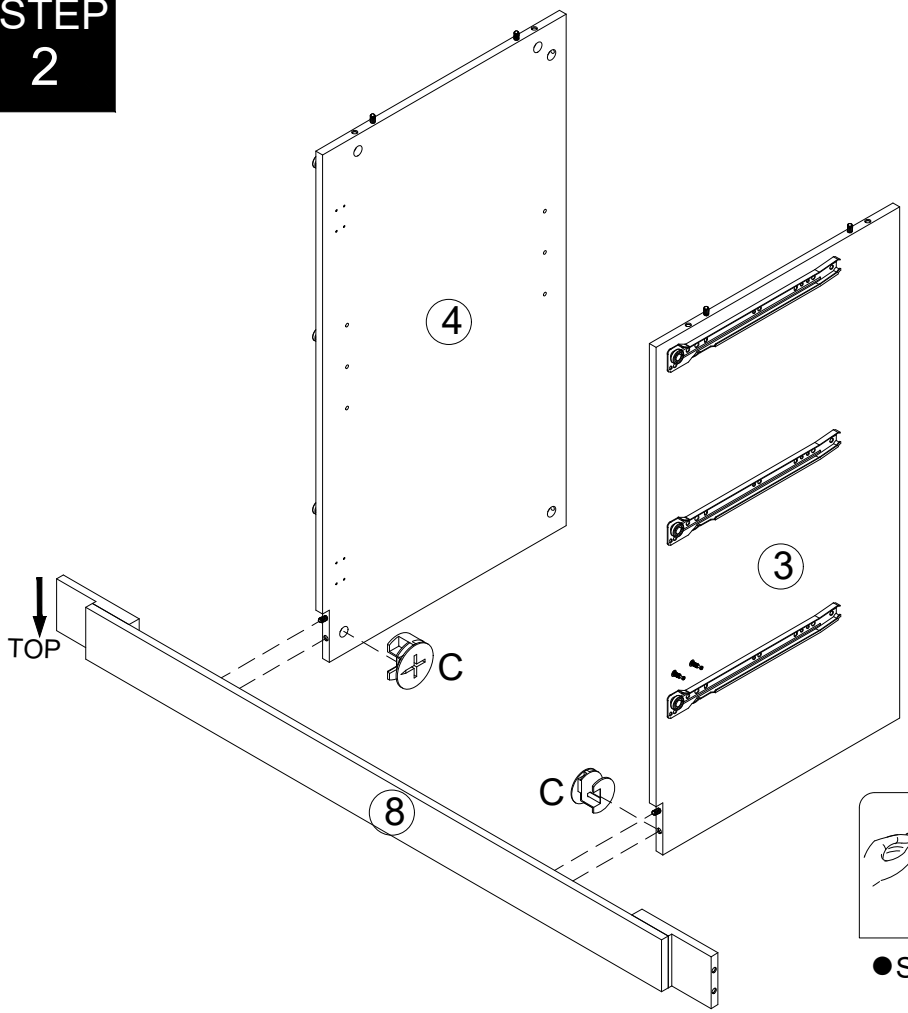

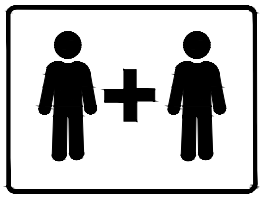

Two people are required to assemble and move this model.

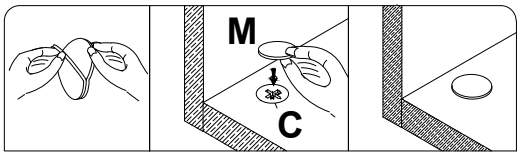

●Stick stickers (M) on cam locks(C).

STEP 3

C 4 x

M 4 x

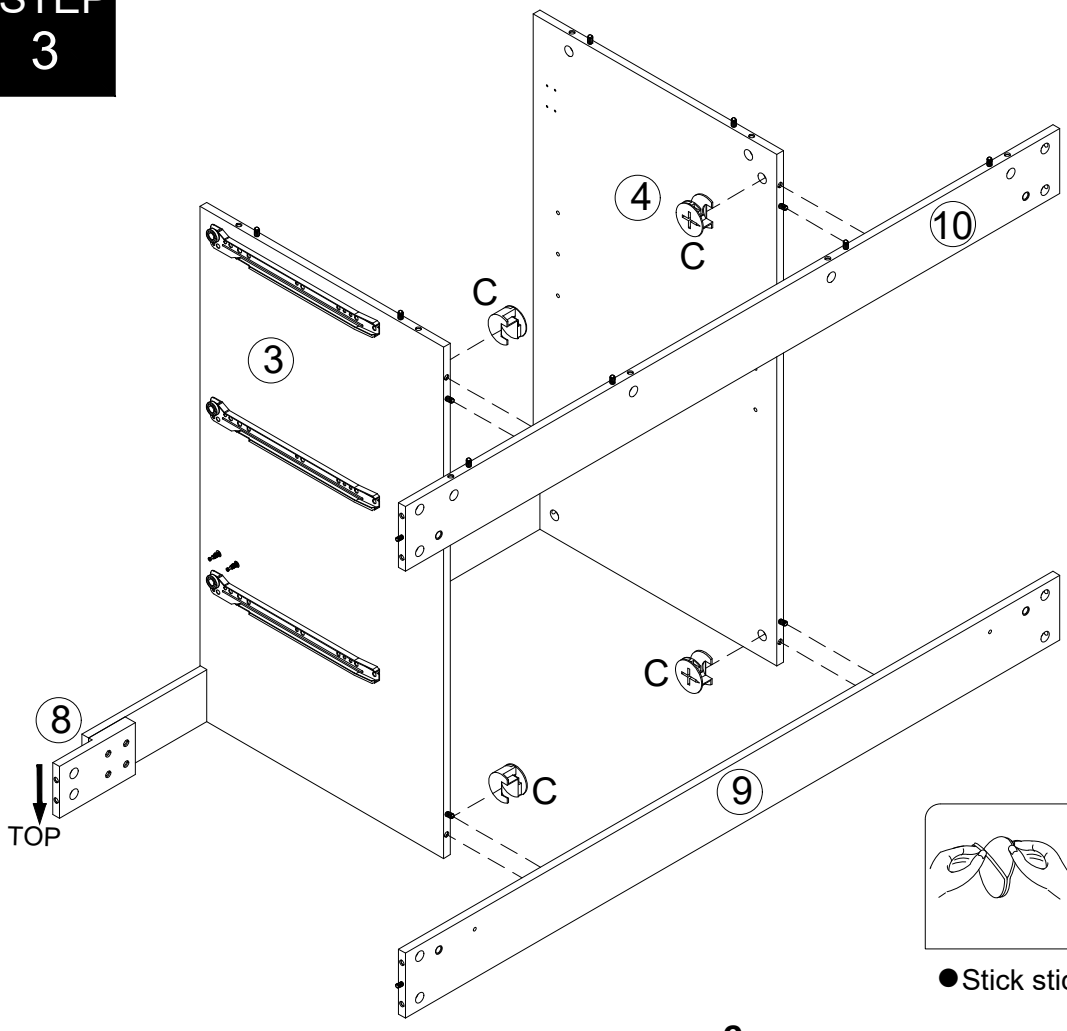

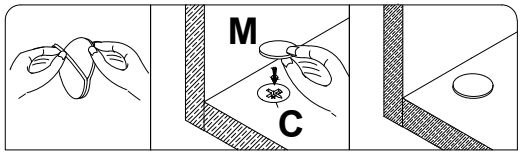

●Stick stickers (M) on cam locks(C).

STEP 4

2 Person Task

D	B	C	M
8 x	4 x	8 x	8 x

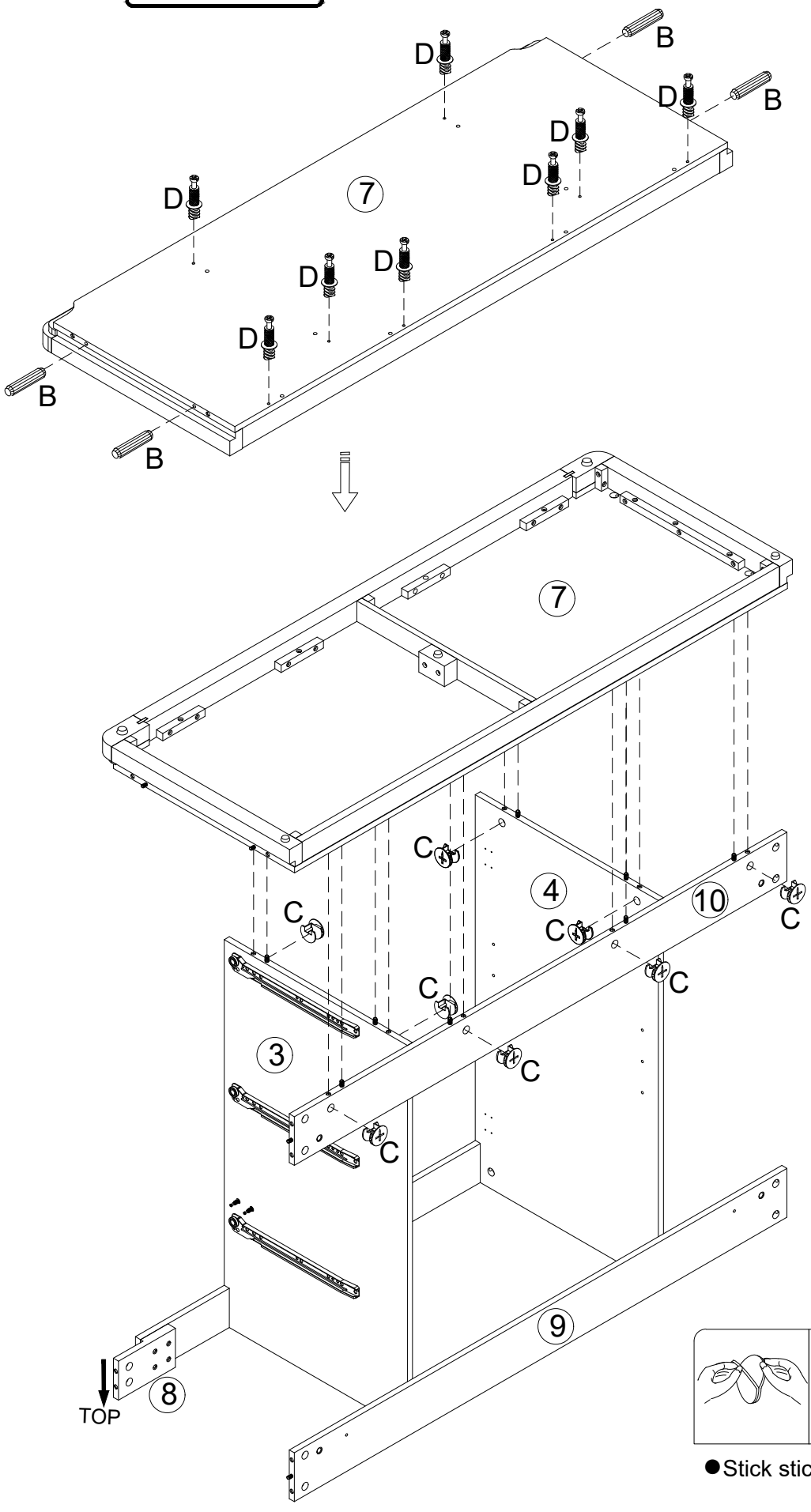

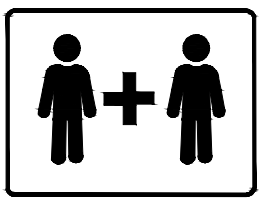

Two people are required to assemble and move this model.

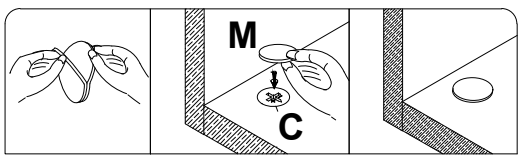

●Stick stickers (M) on cam locks(C).

STEP 5

C

4 x

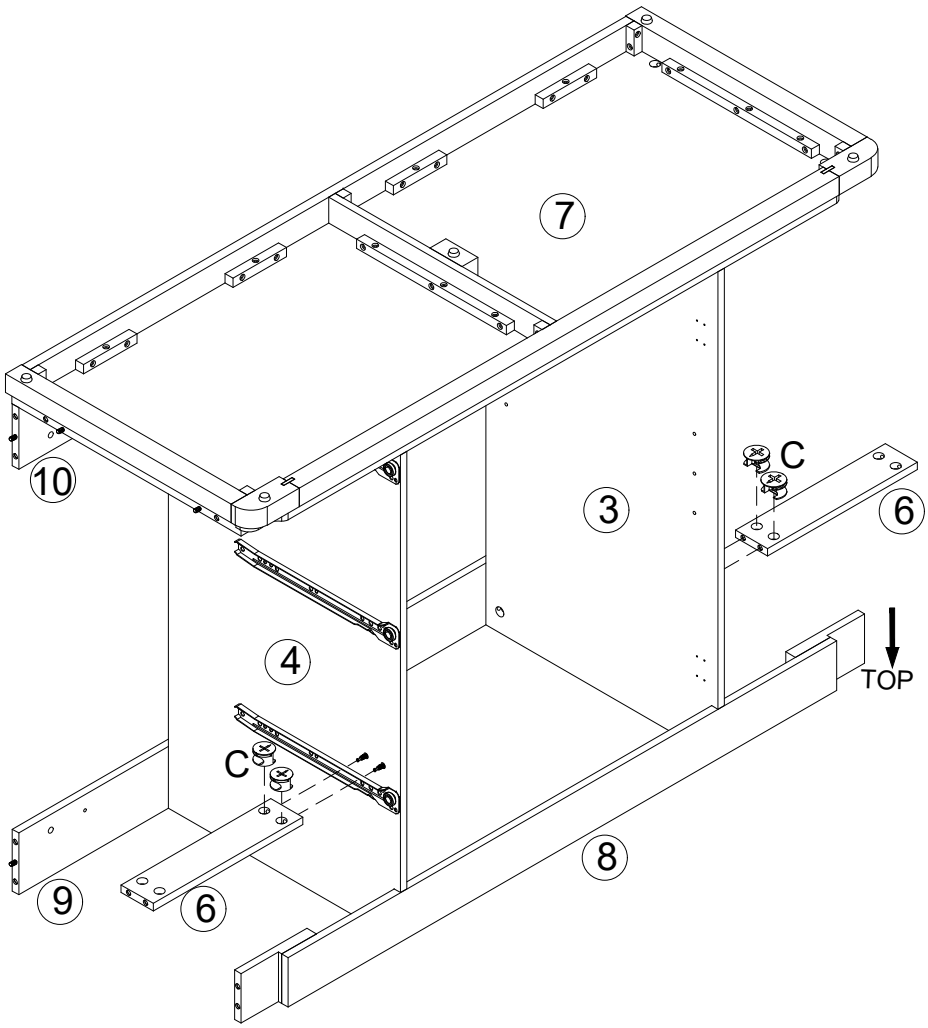

STEP 6

D

26 x

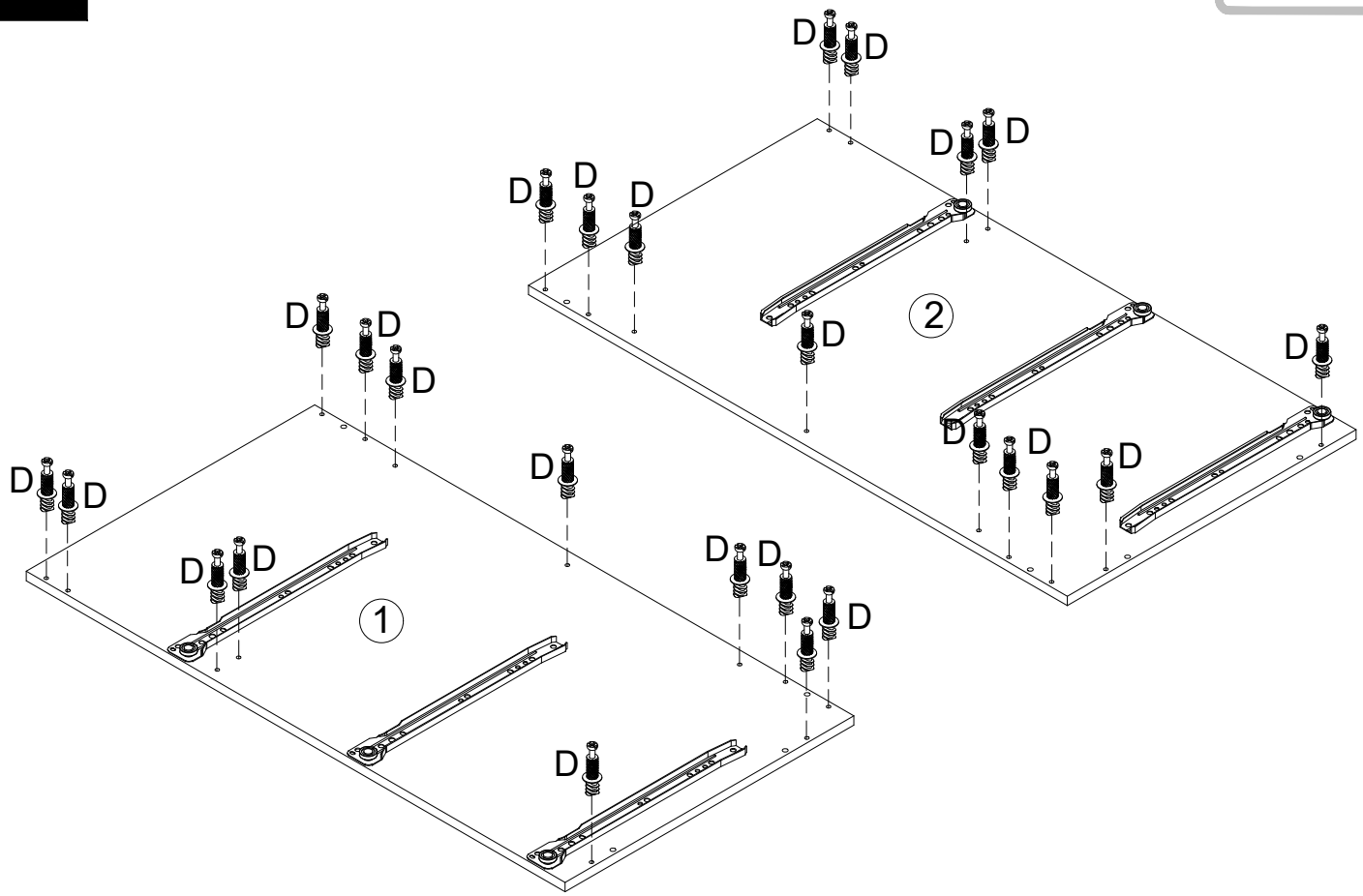

STEP 7

C
10 x

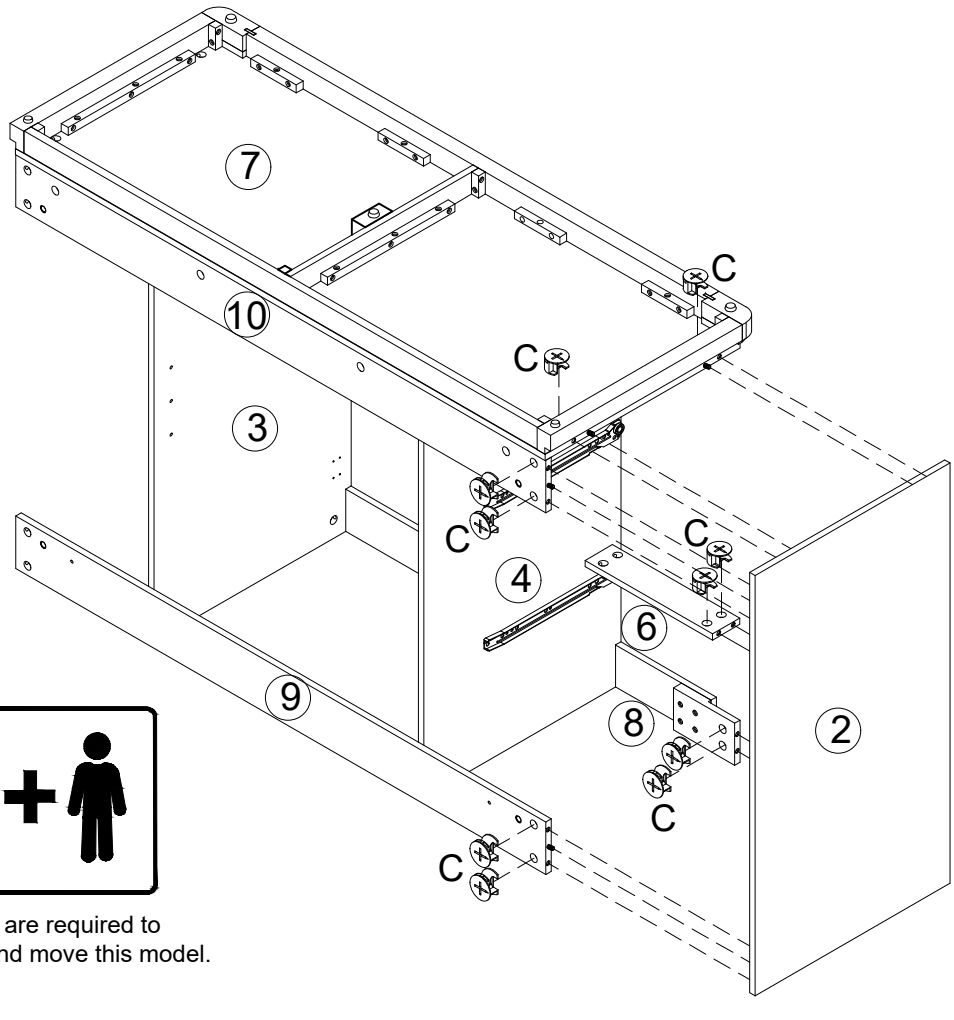

Two people are required to assemble and move this model.

STEP 8

C
10 x

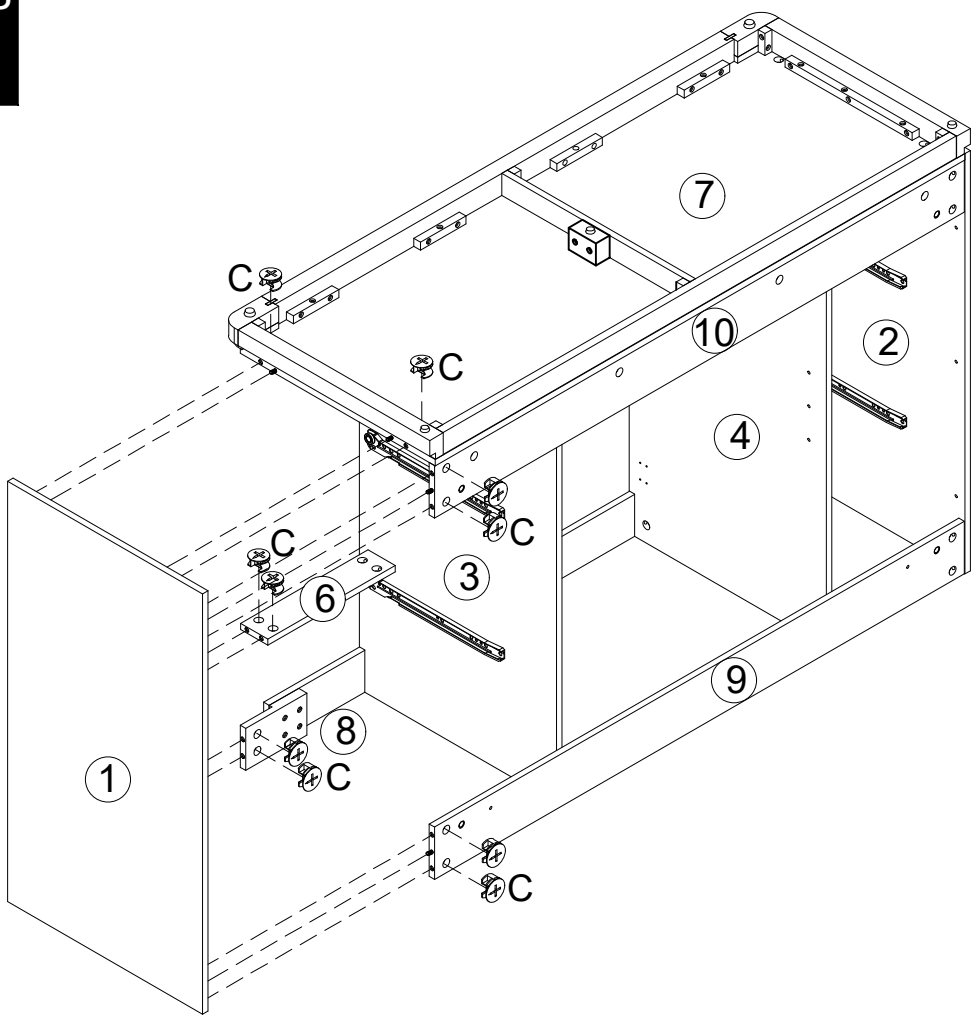

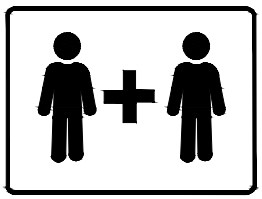

Two people are required to assemble and move this model.

STEP 9

C
6 x

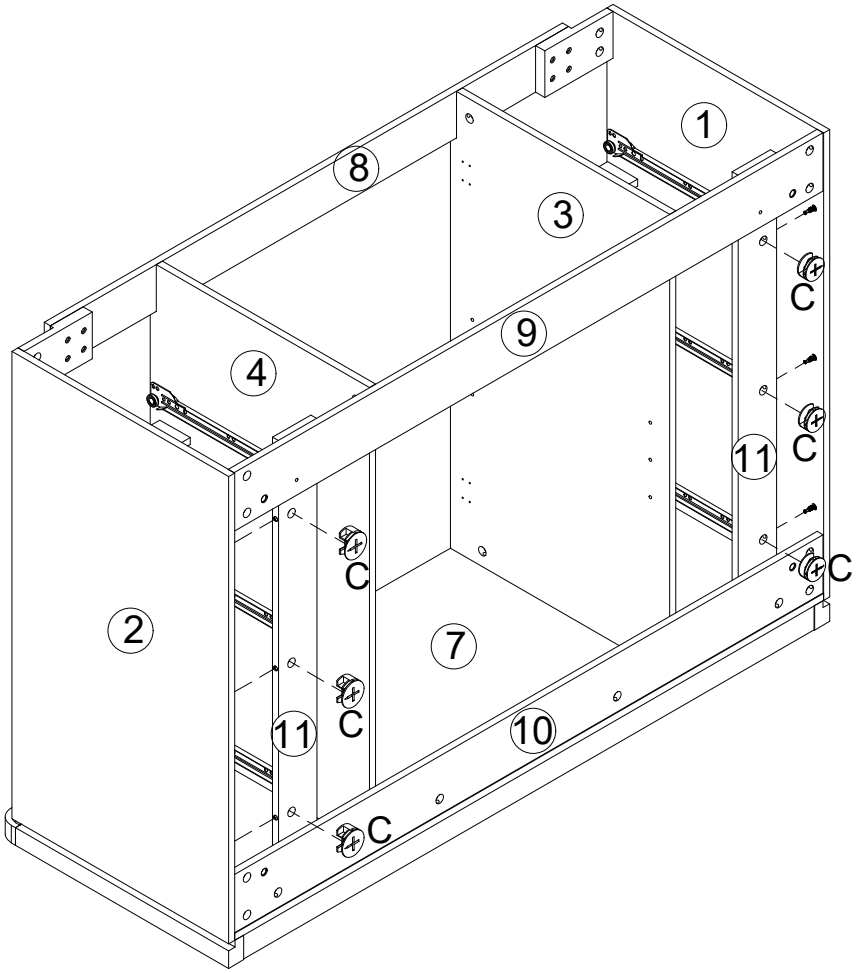

STEP 10

F
4 x

G

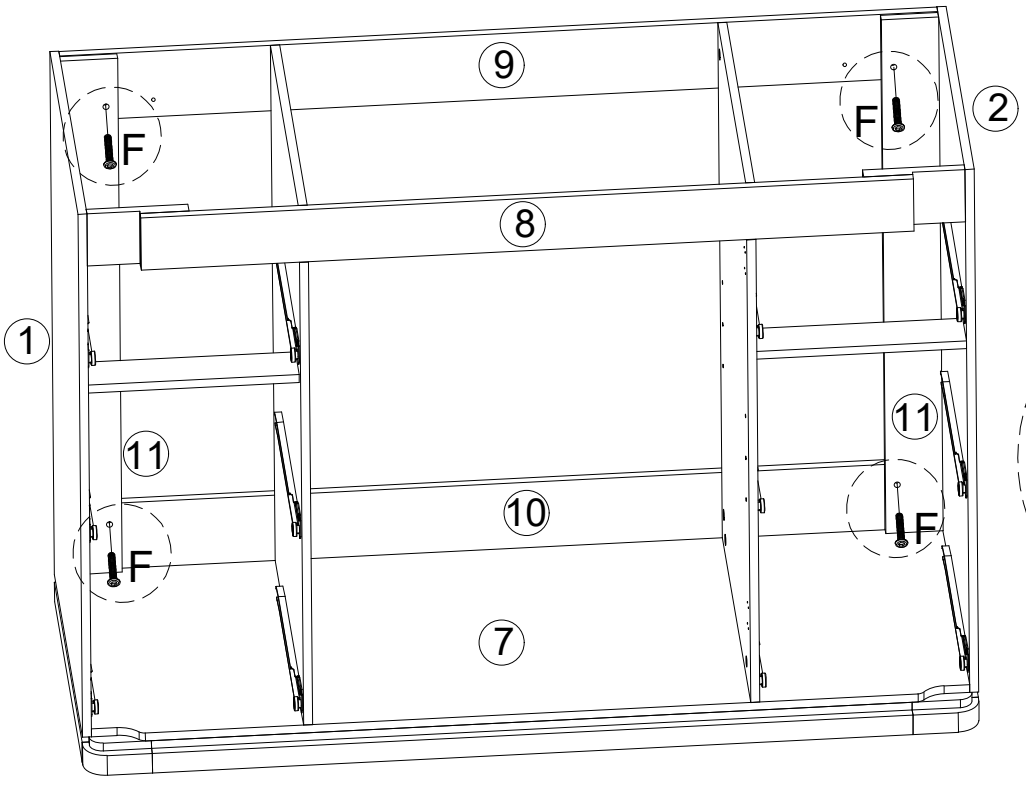

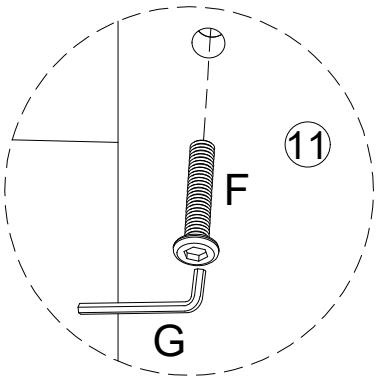

STEP 11

B 12 x

D 12 x

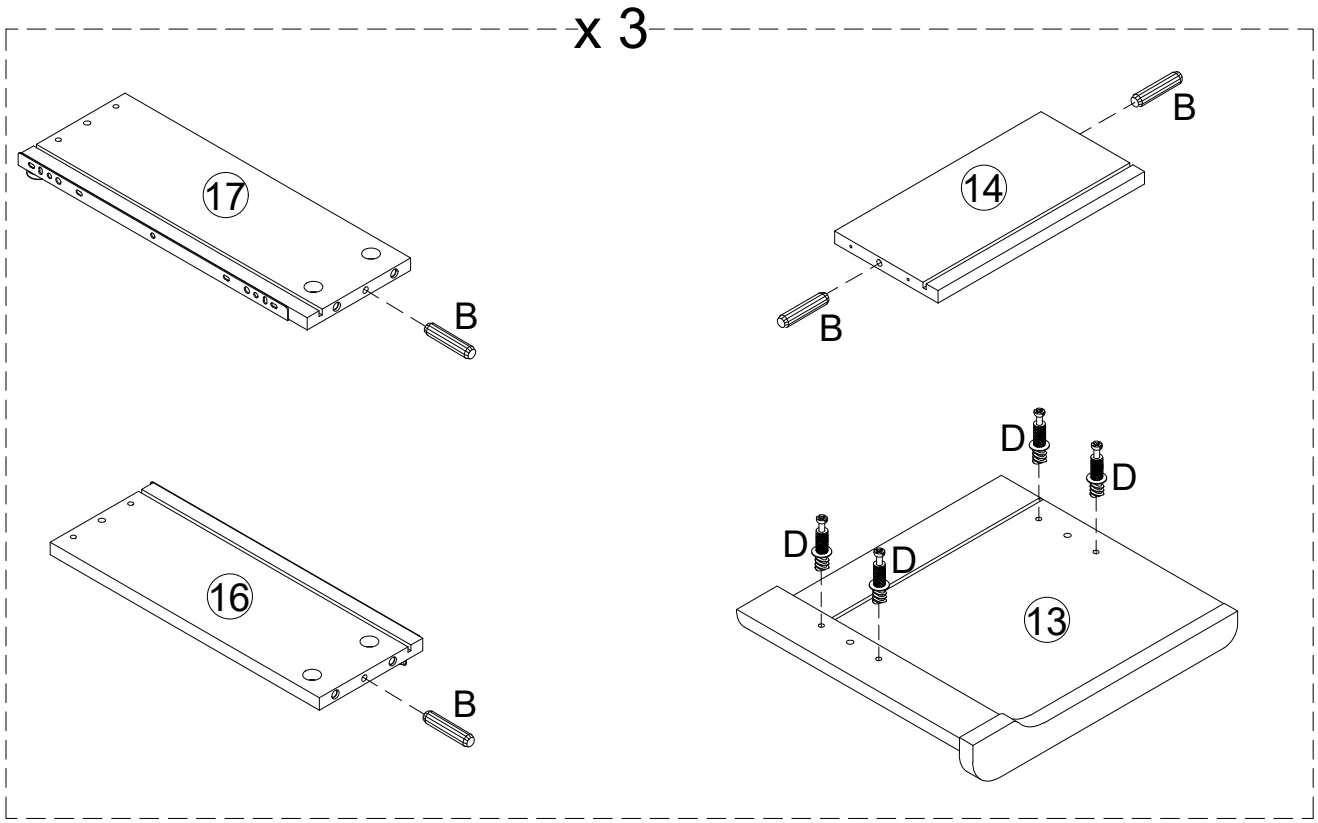

STEP 12

J 12 x

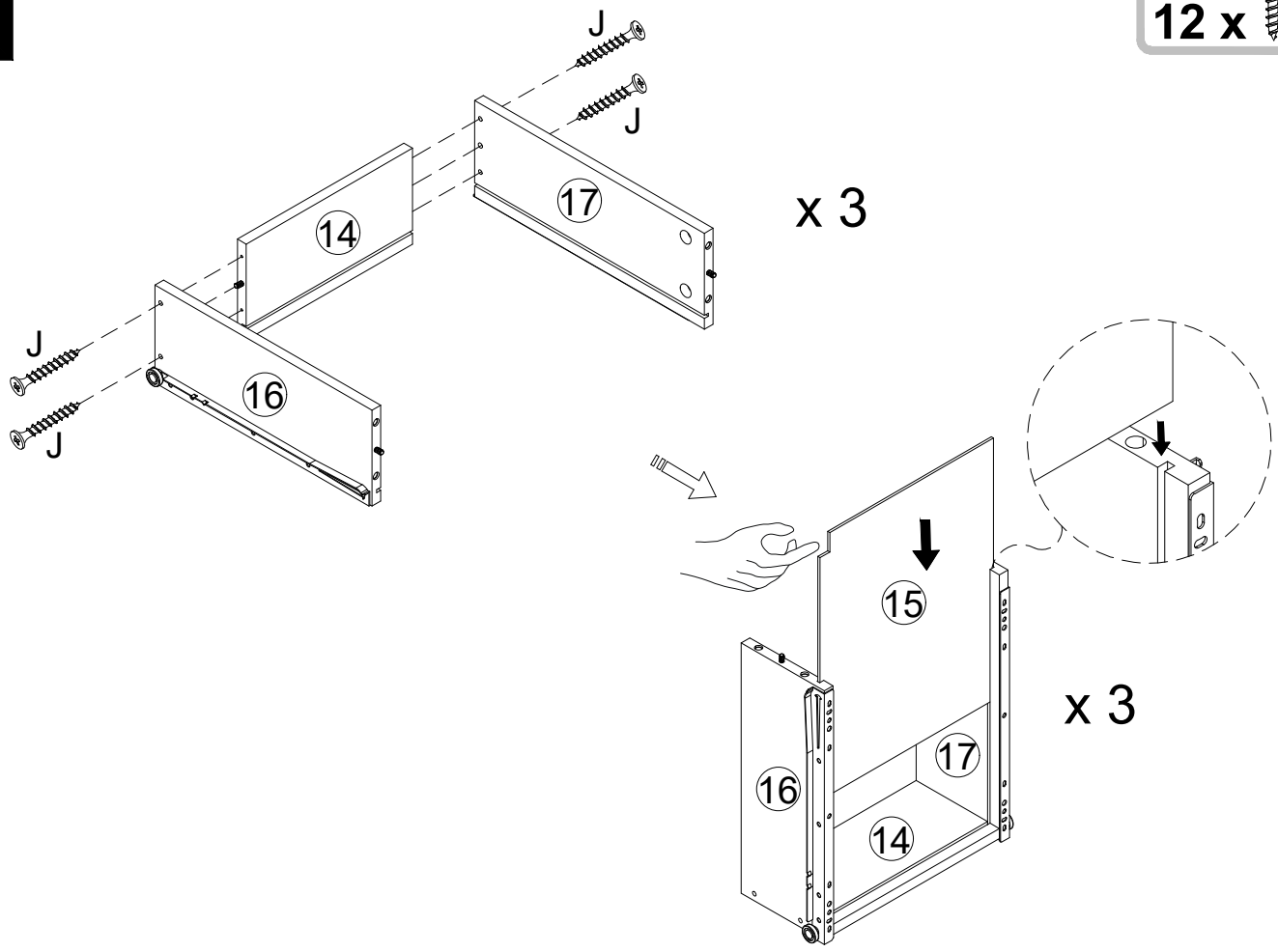

STEP 13

C 12 x



M 12 x

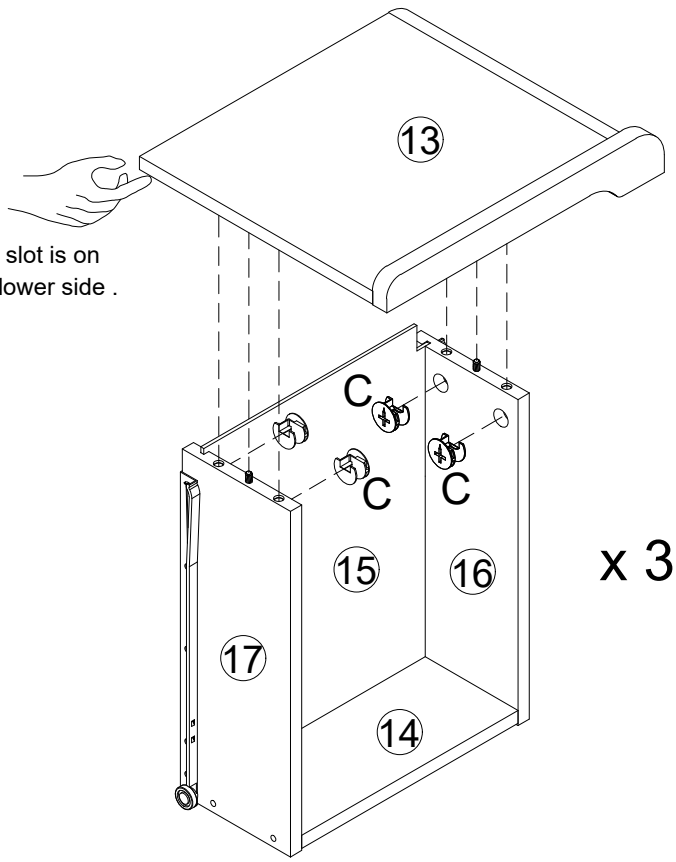

x 3

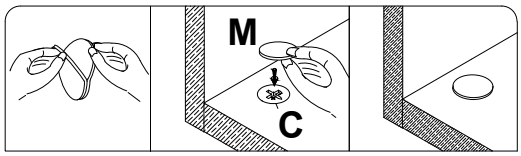

● Stick stickers (M) on cam locks(C).

STEP 14

B 12 x

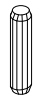

D 12 x



x 3

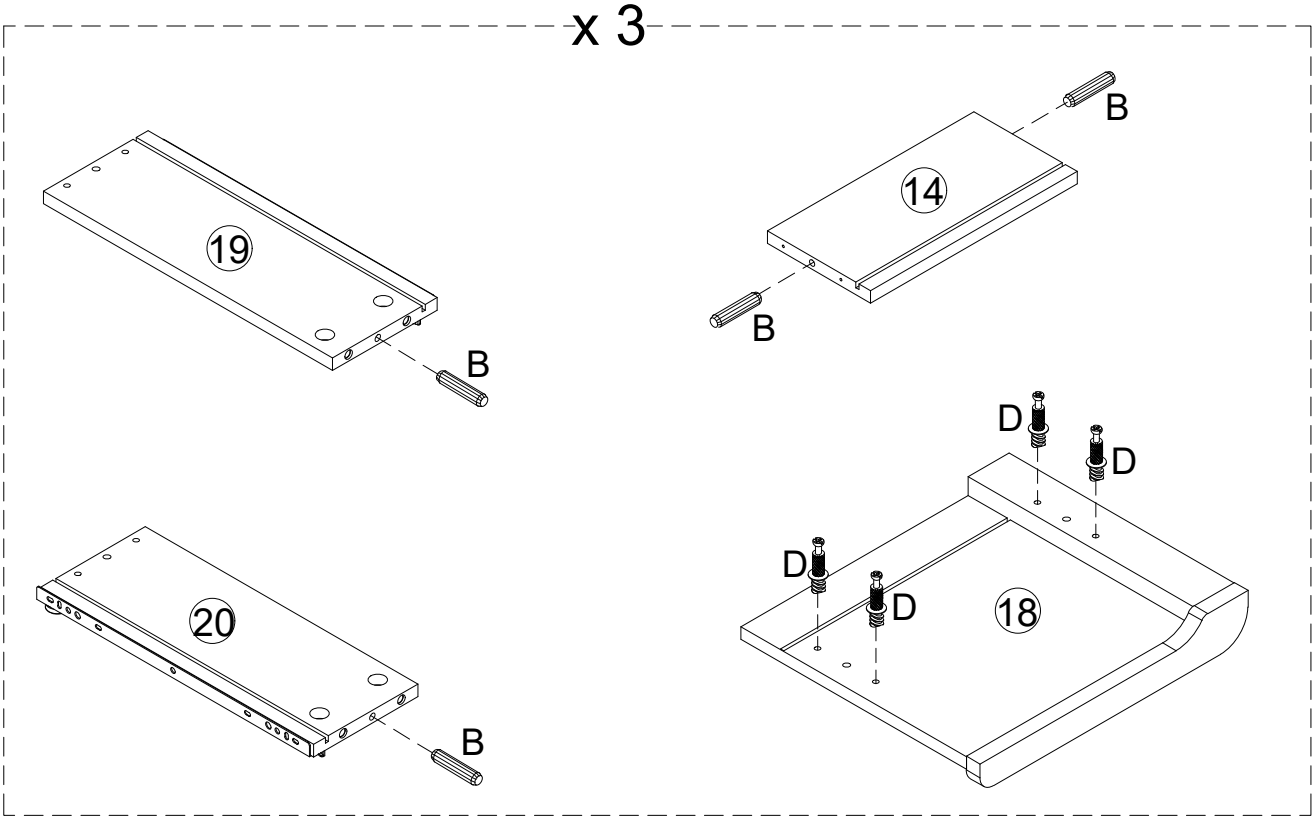

STEP 15

J
12 x

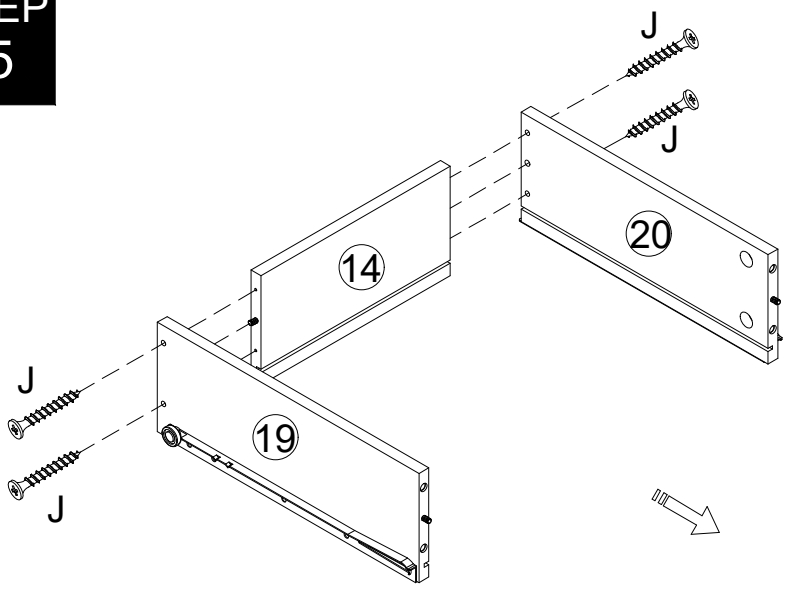

x 3

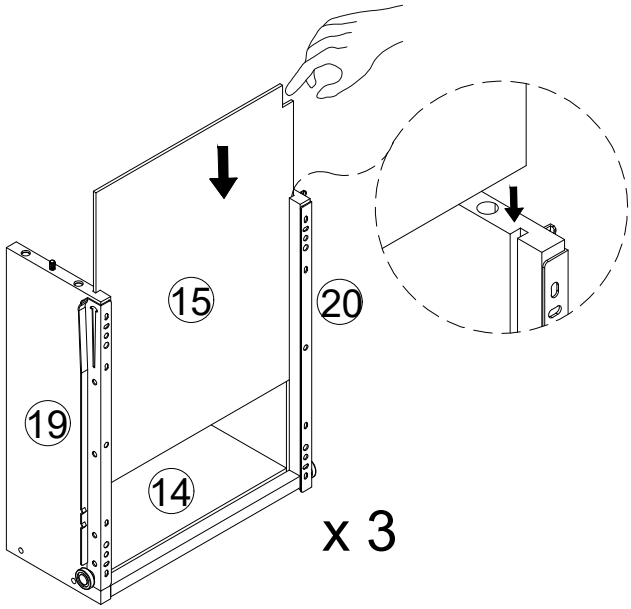

x 3

STEP 16

C
12 x

M
12 x

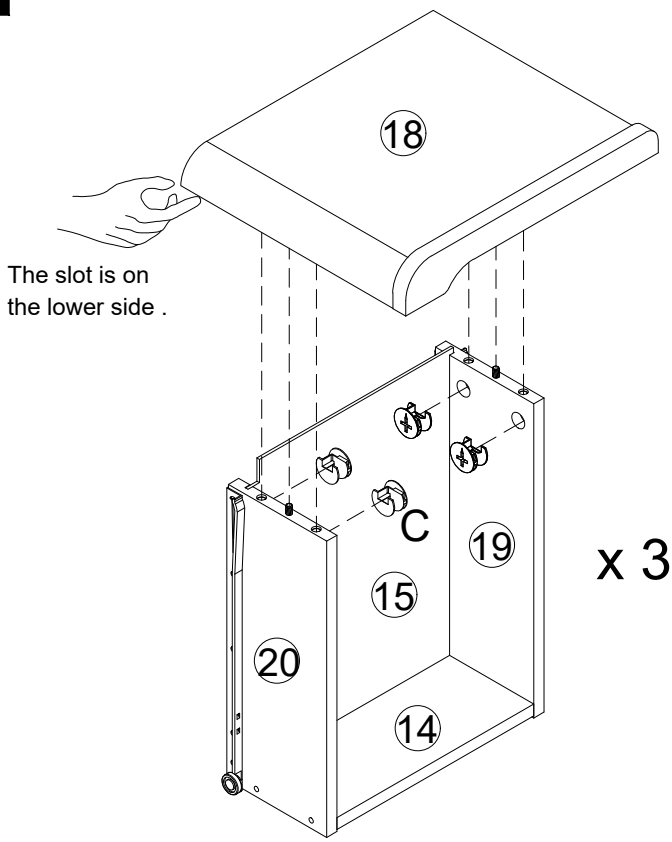

x 3

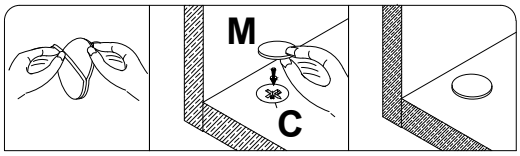

●Stick stickers (M) on cam locks(C).

STEP 17

NOTE: Never open more than one drawer at a time.

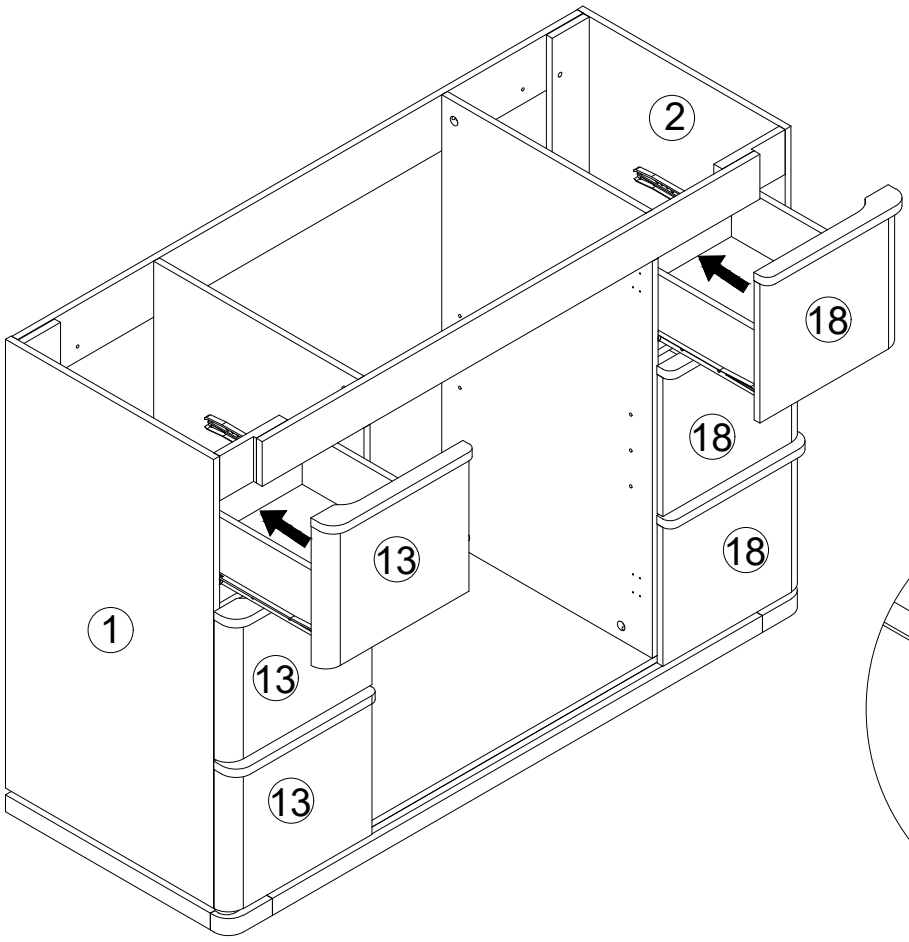

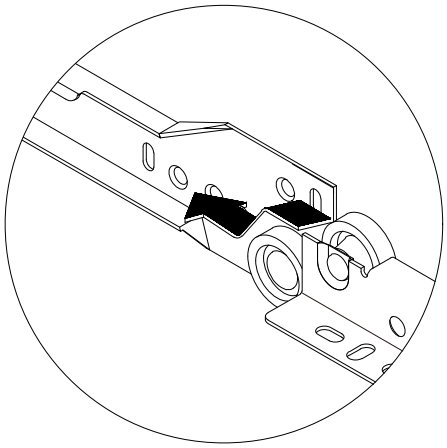

1.Please ensure that you have matched the wheels on BOTH sides of the drawer with the wheels on rails installed BEFORE push in the drawer.

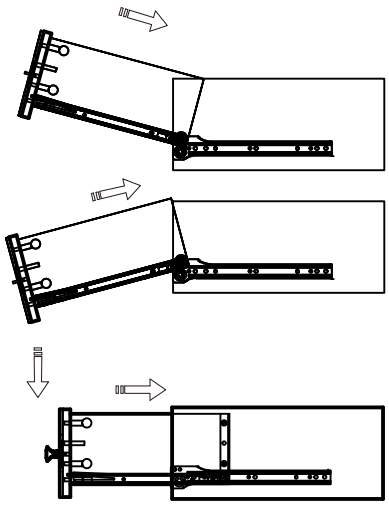

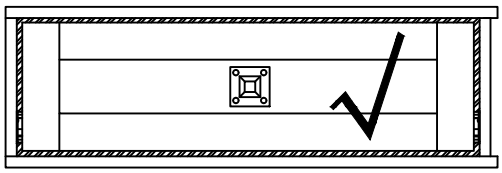

2.If the following occurs, redo the first two step.

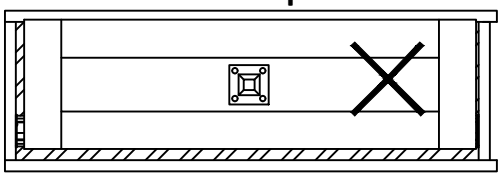

(both wheel are off the rails)

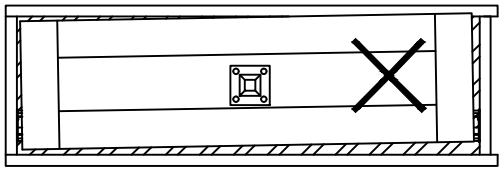

(one wheel is off the rail)

STEP 18

H 4 x

I 8 x

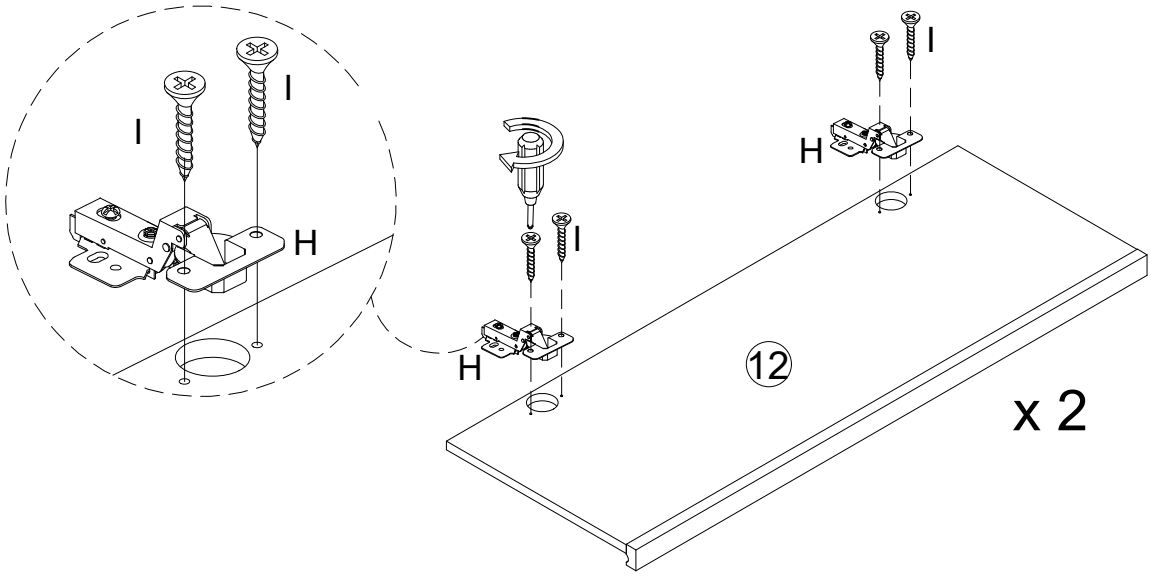

STEP 19

I 16 x

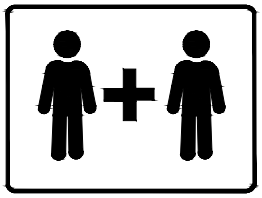

Two people are required to assemble and move this model.

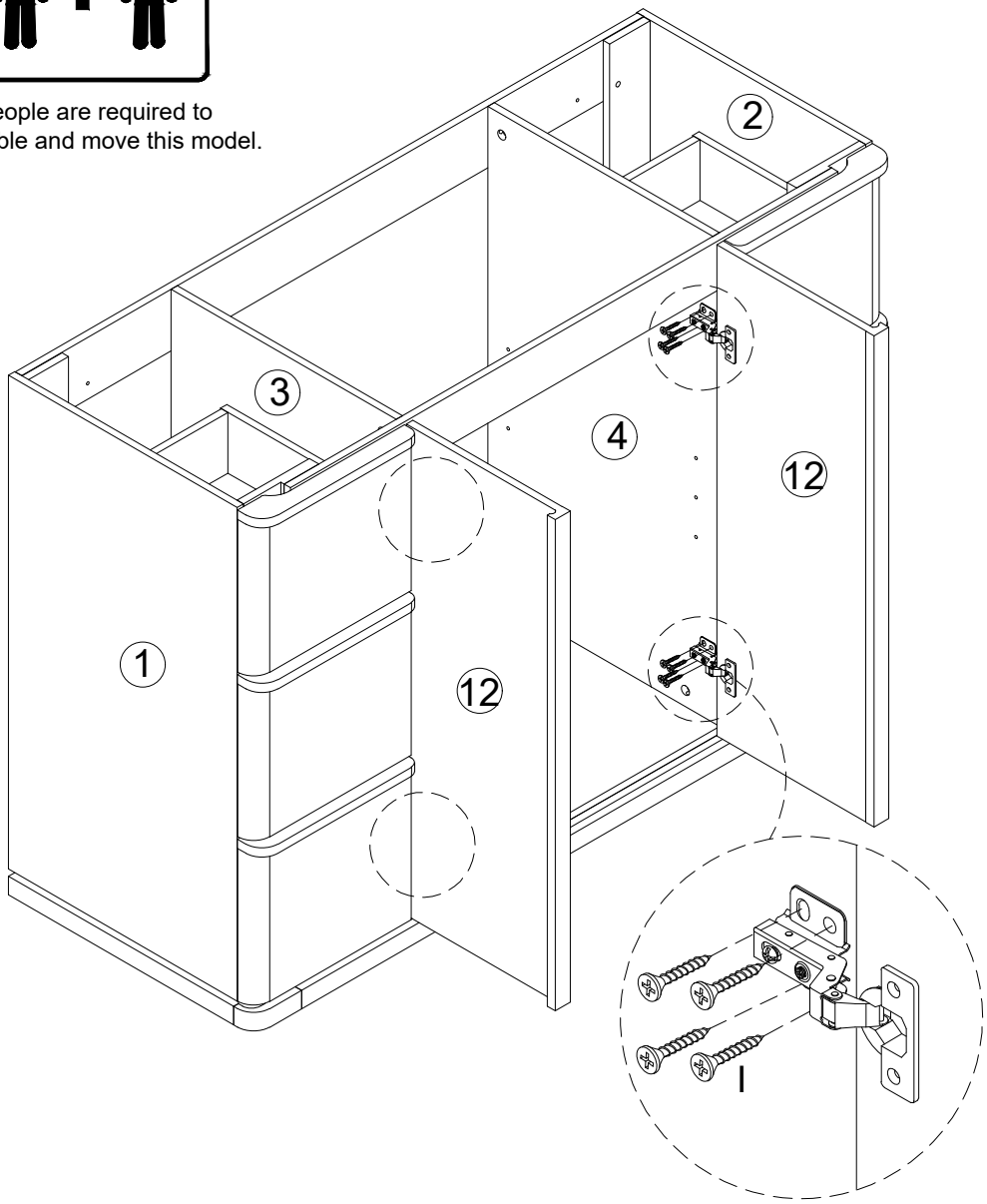

STEP 20

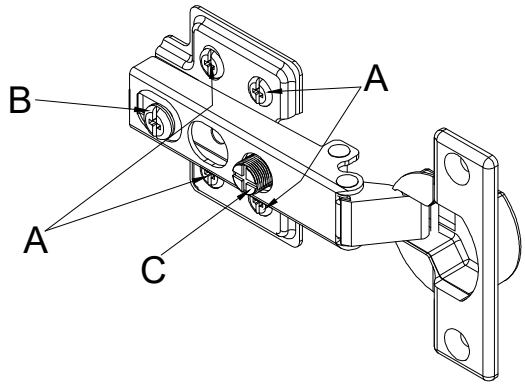

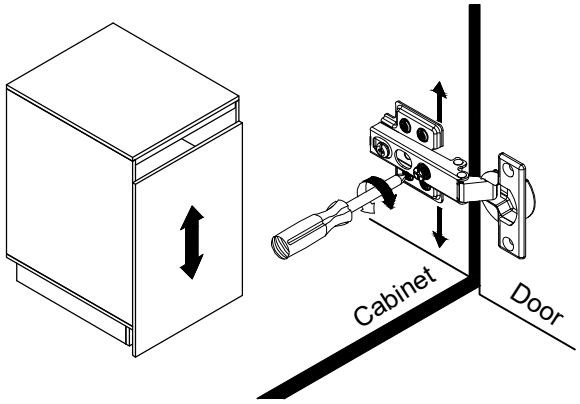

To adjust the vertical height.

Loosen the four screws "A" on both hinges. Two of them are usually in slotted holes which allows you to adjust up or down by a few mm. Then tighten back up.

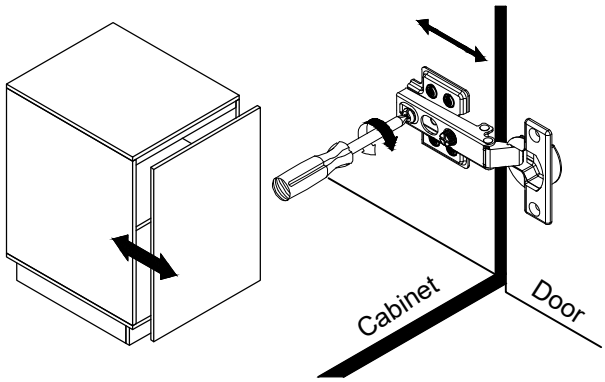

To adjust depth.

Loosen screw "B" and adjust door, if the door can not be adjusted, please loosen screw "C", then try again. Tighten screw "B" and "C".

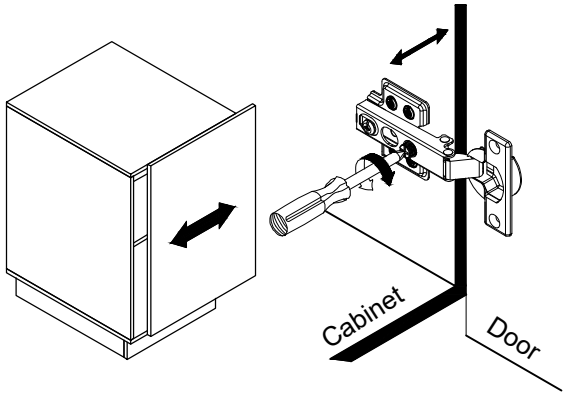

To adjust side ways.

Turning the screw "C" on BOTH hinges on each door.

STEP
21

E
4 x

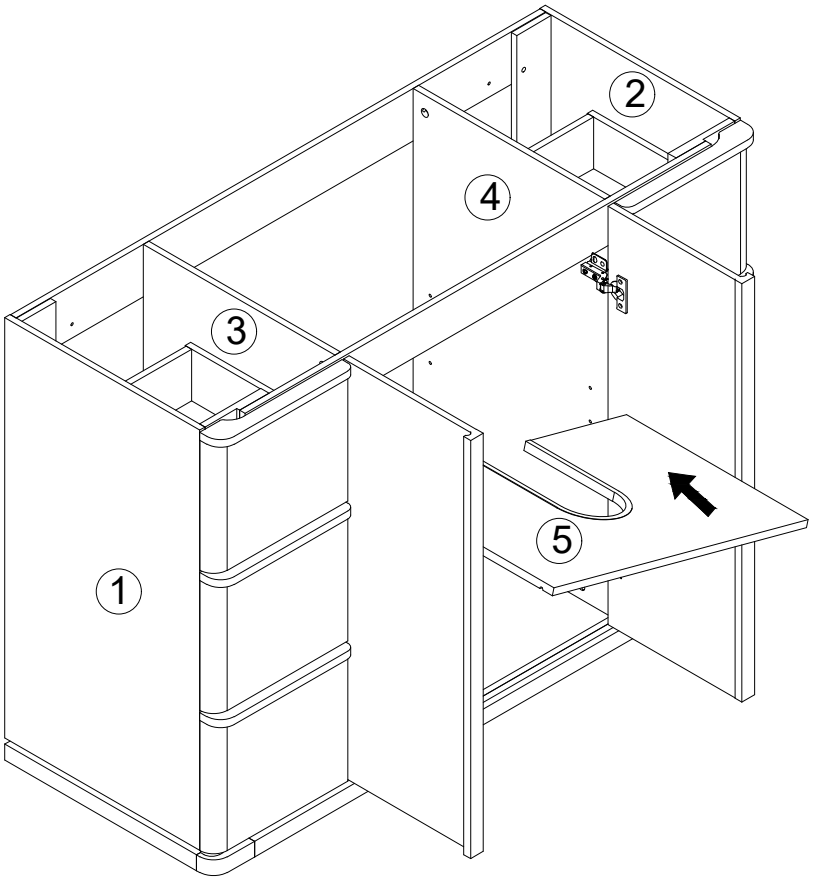

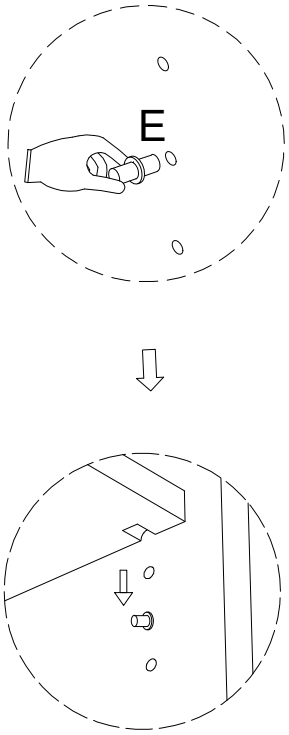

STEP 22

Ensure the vanity is level, adjust floor levelers if needed, then attaching long screws (K) to fasten vanity body (9) to the wall with electric drill.

L 2 x

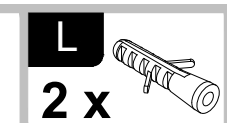

K 2 x



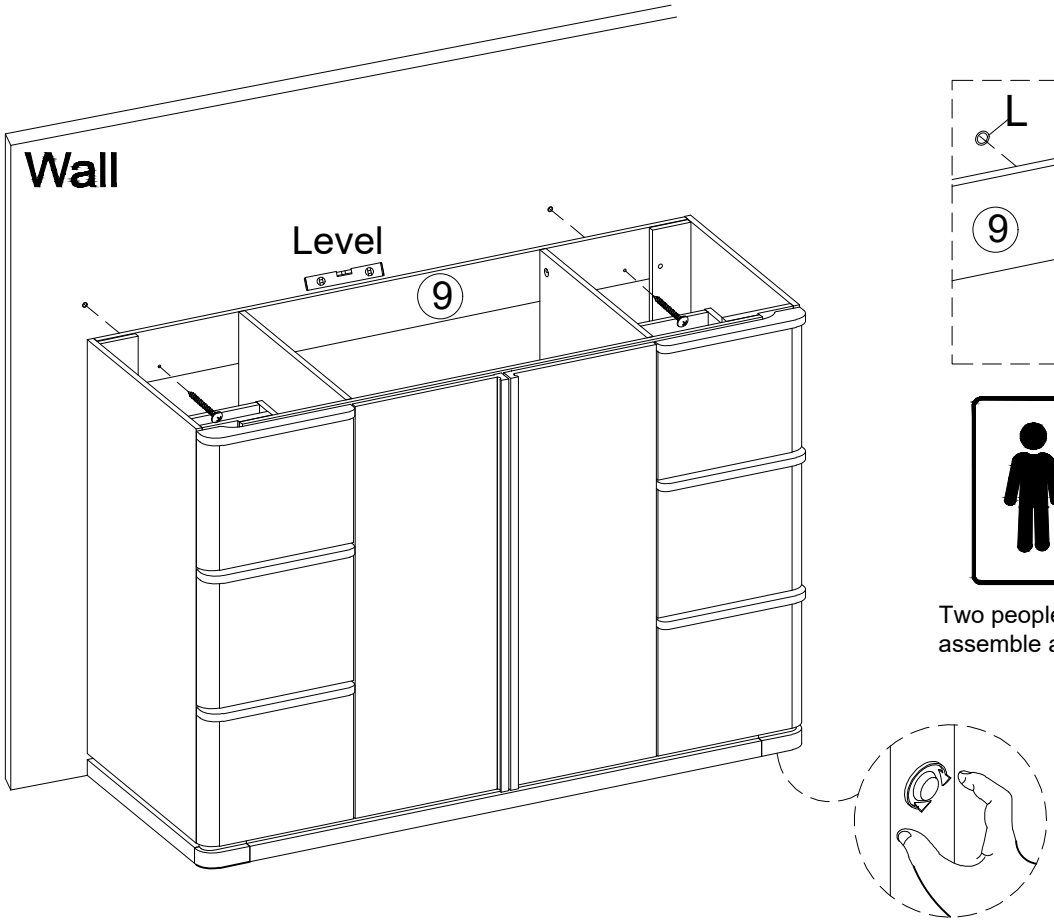

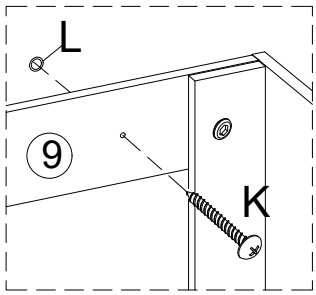

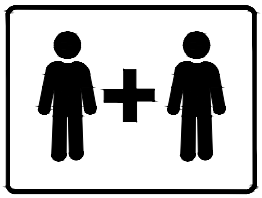

Two people are required to assemble and move this model.

* When installing to a concrete wall, drill two 5/16 inch dia. holes on the wall and punch the expansion bolts (L) into the wall first.*

Step 1

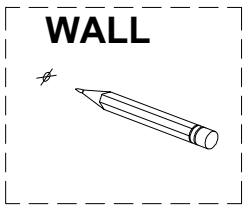

Step 2

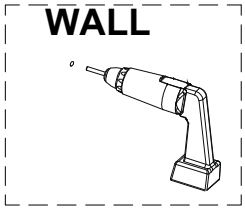

Step 3

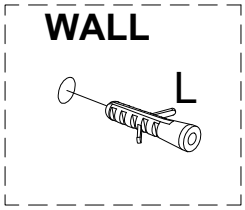

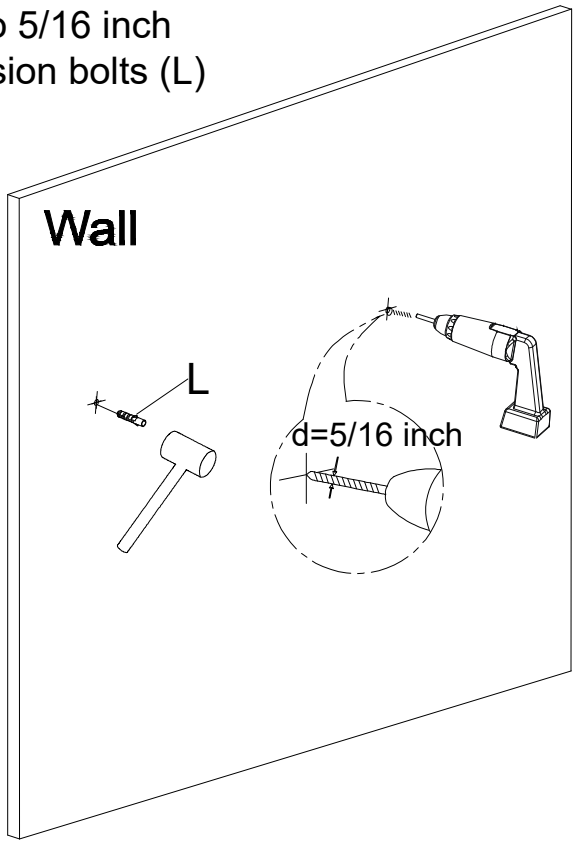

STEP
23

Apply a small bead of silicone (neutral) around the top perimeter of the vanity body . Carefully place the vanity top on the top of the vanity body , and press it down to set in place. Clean any excess silicone compound before allowing to dry and wait 24 hours before exposing to water.

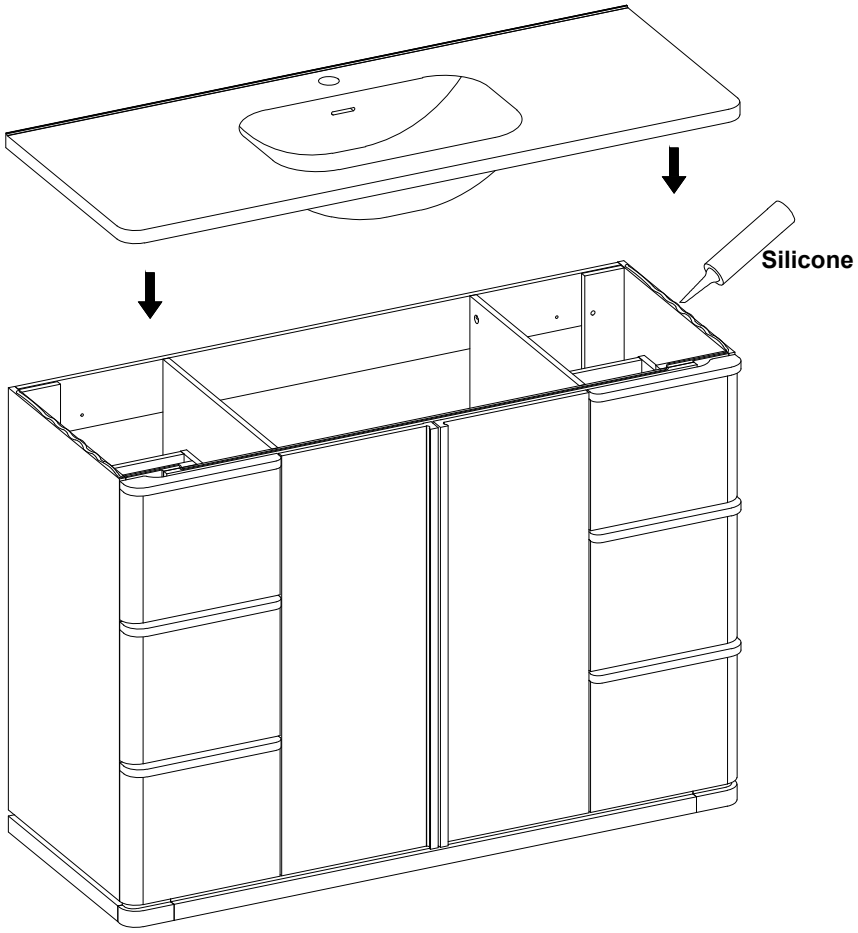

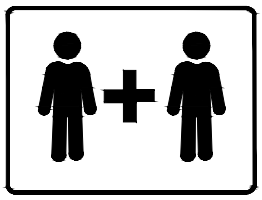

Two people are required to assemble and move this model.

Care and Maintenance

- Use a soft, clean cloth that will not scratch the surface when dusting.
- Use of furniture polish is not necessary. Should you choose to use polish, test first in an inconspicuous area.
- Using solvents of any kind on your furniture may damage the finish.
- Never use water to clean your furniture as it may cause damage to the finish.
- Always use coasters under beverage glasses and flowerpots.
- Liquid spills should be removed immediately. Using a soft, clean cloth, blot the spill gently. Avoid rubbing.
- Always use protective pads under hot dishes and plates. Heat can cause chemical changes that may create spotting within the furniture finish.
- Stains or marks from crayons or ink markers will be difficult to remove.
- In the event that your furniture is stained or otherwise damaged during use, we recommend that you call a professional to repair your furniture.
- Check bolts/screws and nuts periodically and tighten them if necessary.

Caring for Wood Furniture

It is best to keep your furniture in a climate-controlled environment. Extreme temperature and humidity changes can cause fading, warping, shrinking and splitting of wood. It is advised to keep furniture away from direct sunlight as sun may damage the finish.

Proper care and cleaning at home will extend the life of your purchase. Following these important and helpful tips will enhance your furniture as it ages.