COMPONENTS LIST

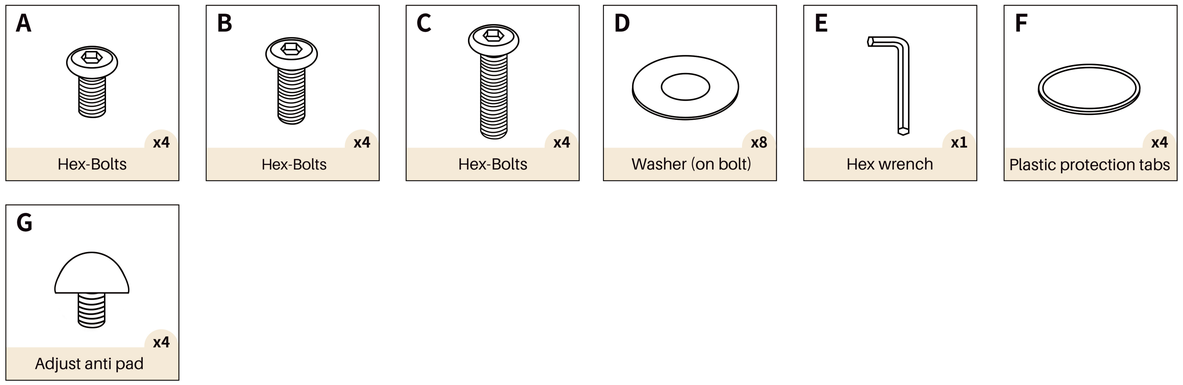

ASSEMBLY INSTRUCTION

Installation Tips

❶ Adjust anti pad and Plastic protection tabs have been pre-installed on the product, due to transportation reasons there may be detachment, please check before the product i nstallation process to avoid increasing the difficulty of installation.

❷ The product will have wrinkles due to the material, please use a moist hot towel to restore the flatness.

❸ Chemical liquid cleaners may cause product color fading.

❹ The zipper design is a design requirement, please do not dismantle the seat cover as it may not be recoverable.

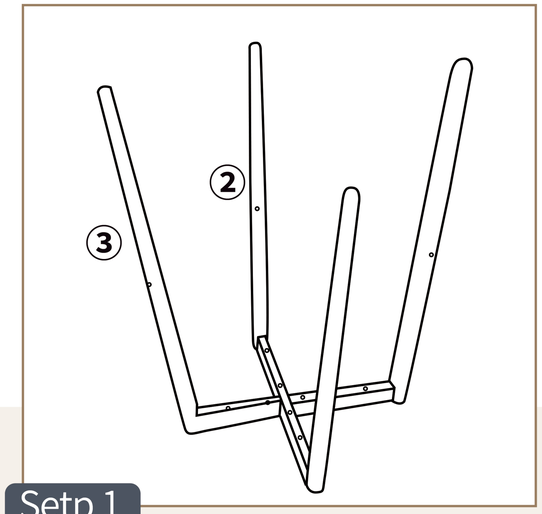

Setp 1

Find steel frames ② and ③ and arrange them in a cross.

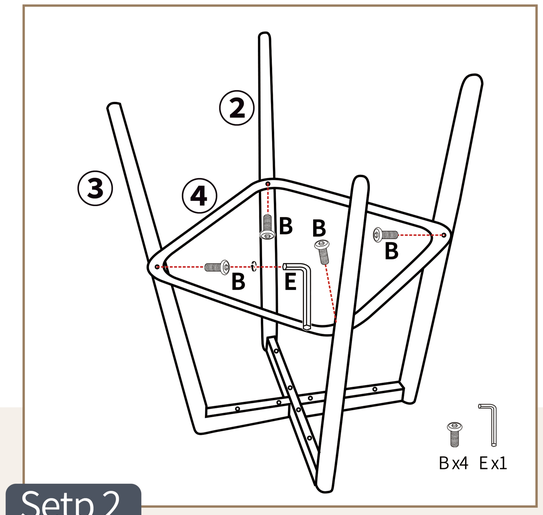

Setp 2

Locate the Foot steel frame ④ and screw in the 4 screws **B** to hold them together.

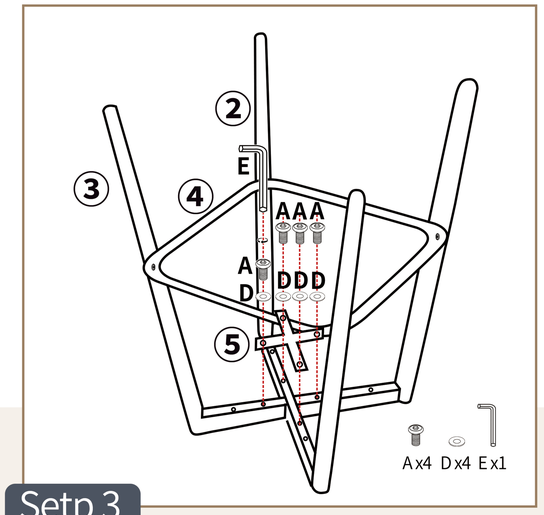

Setp 3

Find Cross frame fixing piece ⑤, and tighten screw **A** and spacer **D** to it.

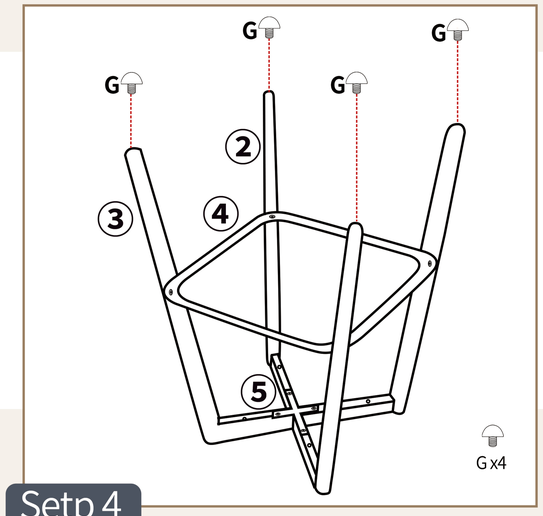

Setp 4

Install the Adjust anti **G** pad are installed on the frame bottom.

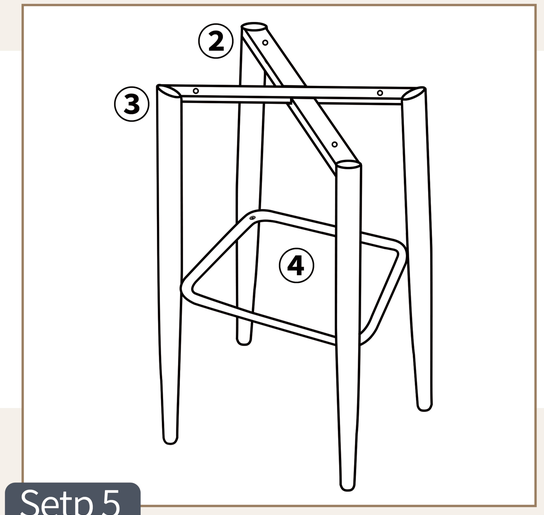

Setp 5

Flip Frame (Step 4).