ASSEMBLY INSTRUCTIONS

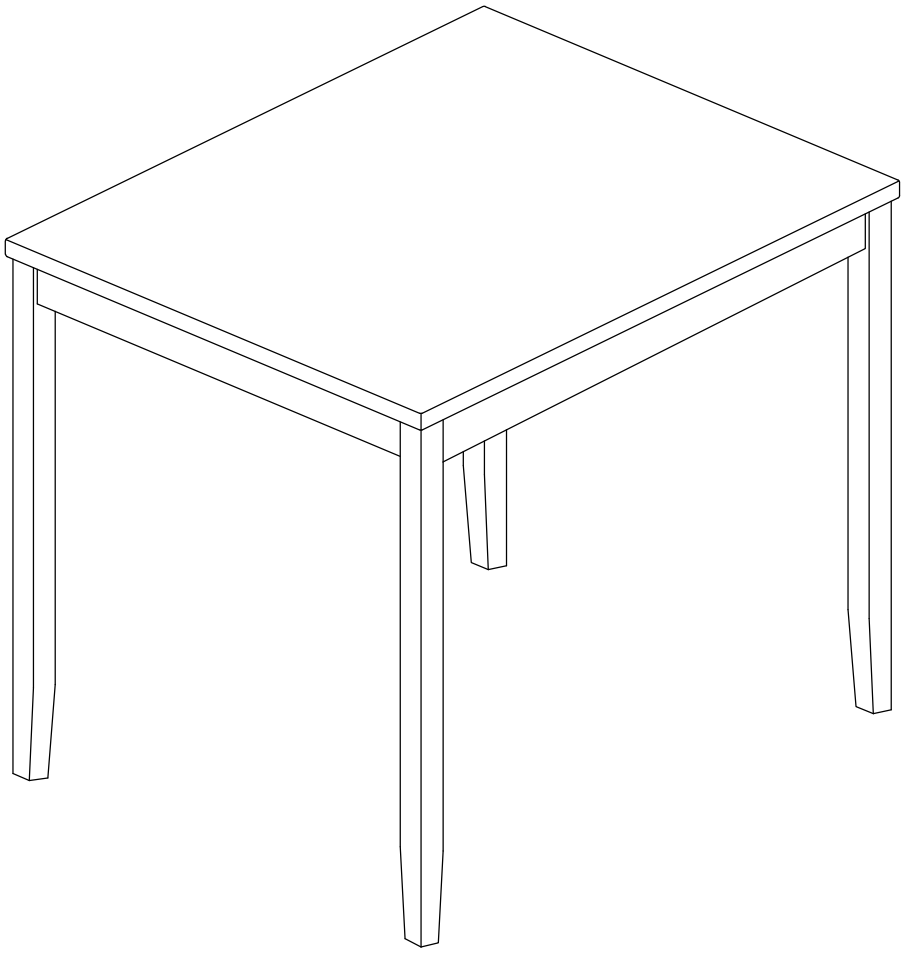

ASSEMBLY TIPS:

1. Remove hardware from box and sort by size.
2. Please check to see that all hardware and parts are present prior to start of assembly.
3. Please follow attached instructions in the same sequence as numbered to assure fast & easy assembly.

Part List

NO.	DIAGRAM	PART NAME	Q'ty
#1		Table Top	1 pc
#2		Table Legs	4 pcs

Hardware List

NO.	DIAGRAM	PART NAME	Q'ty
#A		Bolt Ø5/16" x 2-3/8"	8 pcs
#B		Spring washer Ø5/16"	8 pcs
#C		Flat washer Ø5/16"	8 pcs
#D		Allen key M4	1 pc

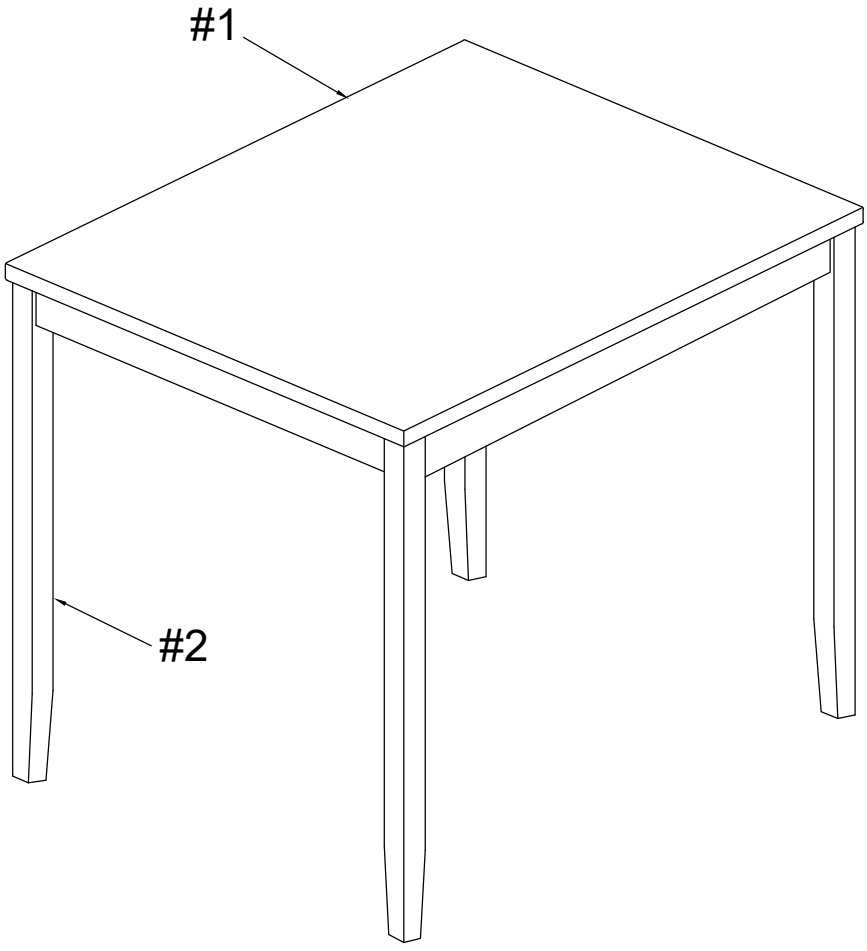

STEP 1

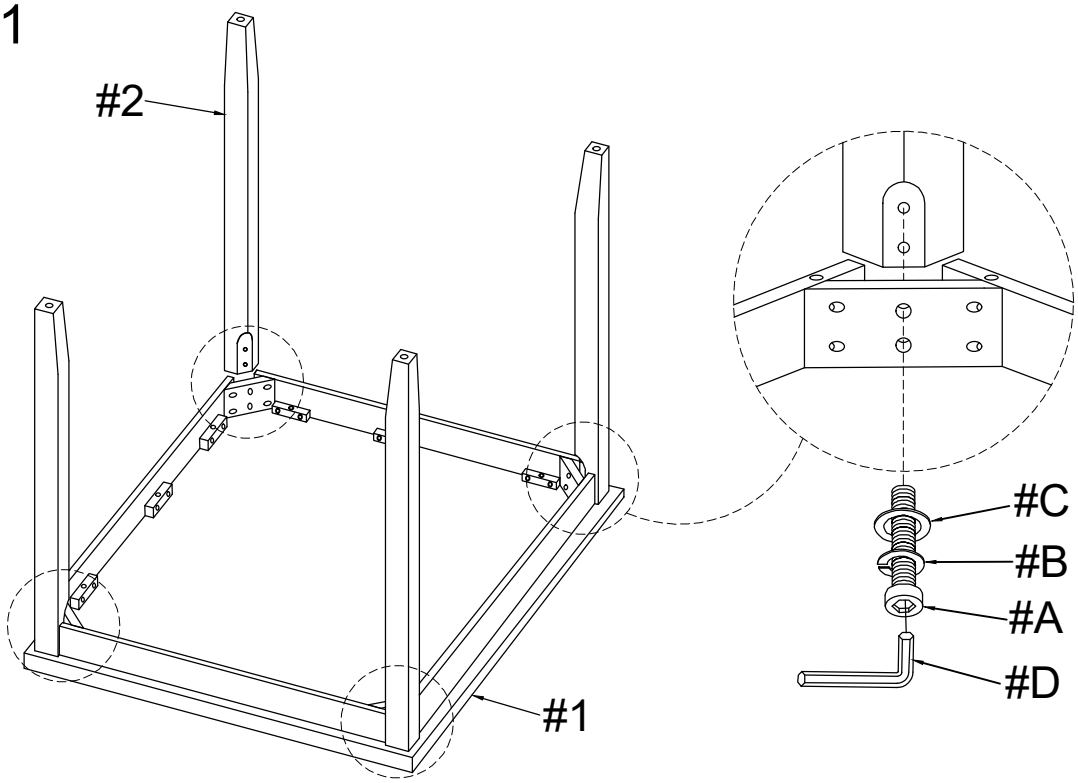

STEP 2

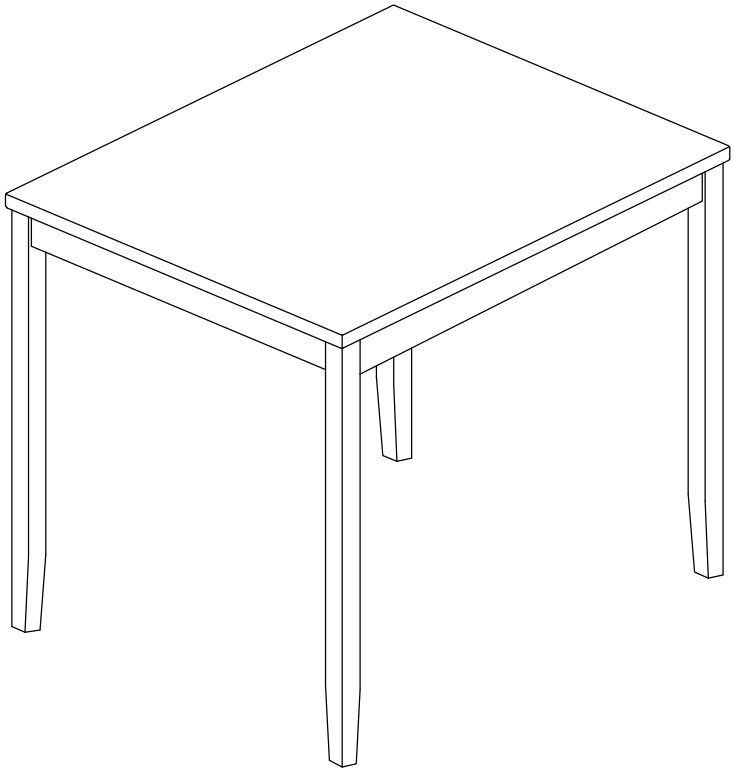

Tighten all screws until completely asembled.