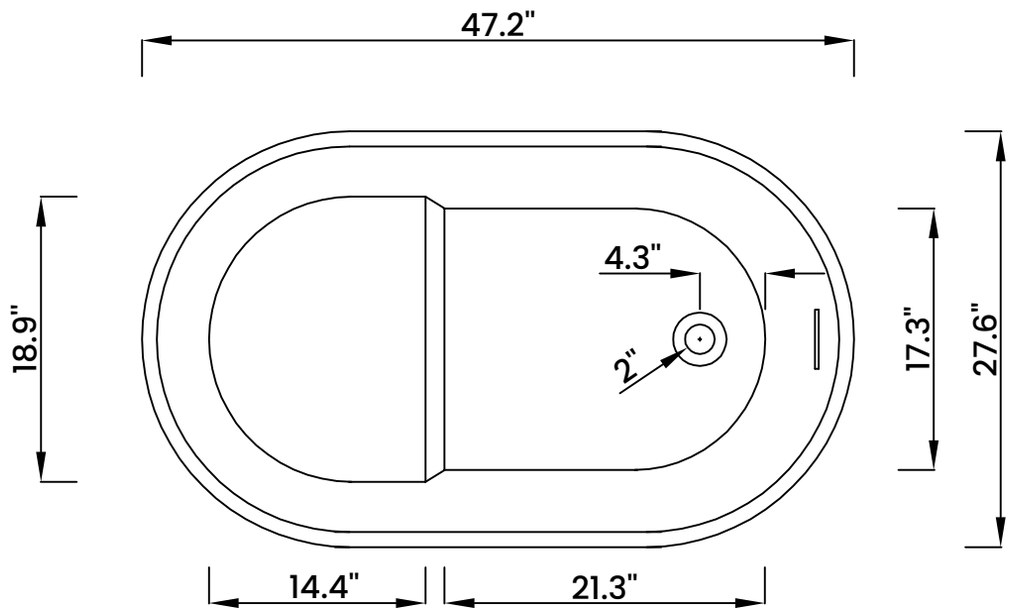
47.2"
18.9"
4.3"
2"
17.3"
27.6"
14.4"
21.3"

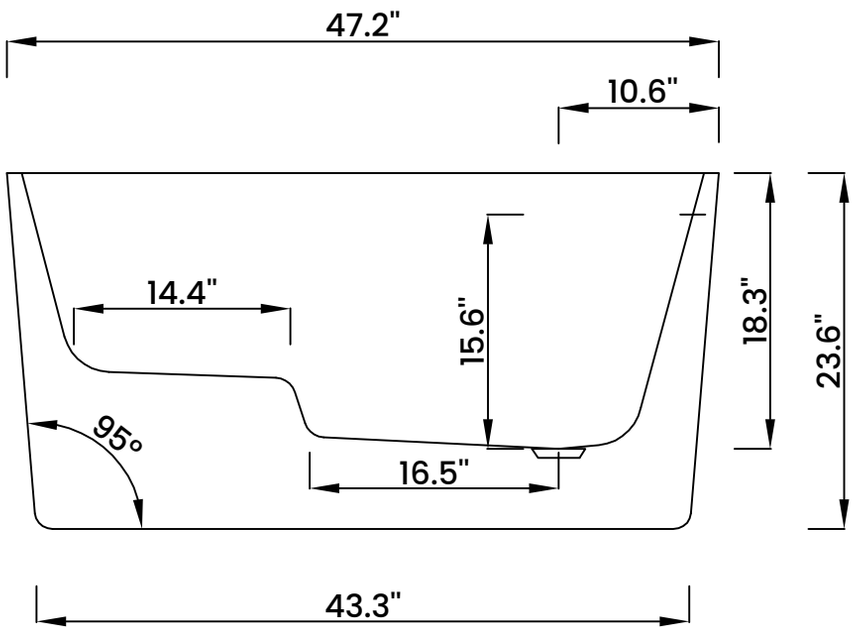
47.2"
10.6"
14.4"
15.6"
18.3"
23.6"
95°
16.5"
43.3"

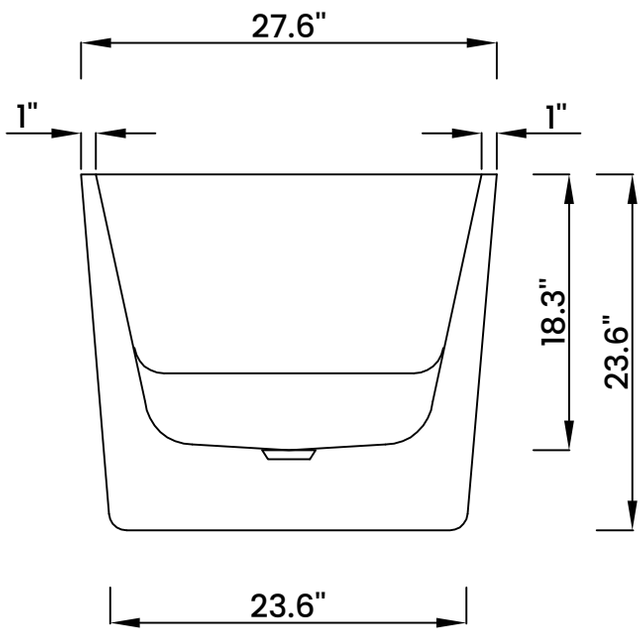
27.6"
1"
1"
18.3"
23.6"
23.6"