MOEN

Buy it for looks. Buy it for life.®

Specifications

ADA

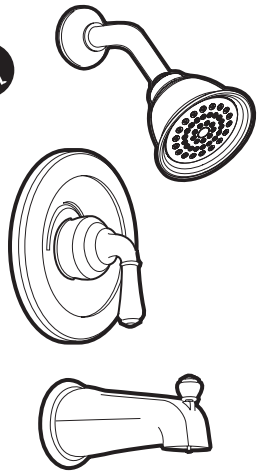

MONTICELLO® INSPIRATIONS™ POSI-TEMP®

Single-Handle Tub/Shower (Trim Only)

Models: T2347, T2347CP, T2347P, T2347W

(Bulk packed 12 per carton)

RT2347/AT2099, RT2347P/AT2099P, RT2347PM/AT2099PM, RT2347BP/AT2099BP, RT2347CG/AT2099CG, RT2347ST/AT2099ST, RT2347NL/AT2099NL

(Packed 1 per carton)

T2449, T2449CP, T2449P, T2449PM, T2449PMC, T2449ST, T2449STP, T2449W

(Packed 1 per carton)

FAUCET DESCRIPTION
- Metal construction with a chrome plated, LifeShine® polished brass, Platinum, Black Opal™, Classic Gold, Satine®, Nickel or glacier finish
- Includes showerhead, arm and flange

OPERATION
- Handle operates counterclockwise through a 270˚ arc with off at 6 o'clock and maximum hot at the 9 o'clock position. Shut off in clockwise direction
- Adjustable temperature limit stop to control maximum hot water temperature
- Pressure balancing mechanism maintains selected discharge temperature to ± 2°

FLOW
- Showerhead limited to 2.5 gpm (9.5 L/min)

CARTRIDGE
- 1222 cartridge design
- Nonmetallic/nonferrous and stainless steel materials
- Accommodates back to back installations

STANDARDS
- Third party certified by CSA to meet CSA B-125,ASME A112.18.1M and all applicable requirements referenced therein and complies with the applicable requirements of ANSI A117.1

WARRANTY
- Lifetime limited warranty against leaks, drips and finish defects to the original consumer purchaser
- 5 year warranty if used in commercial installations

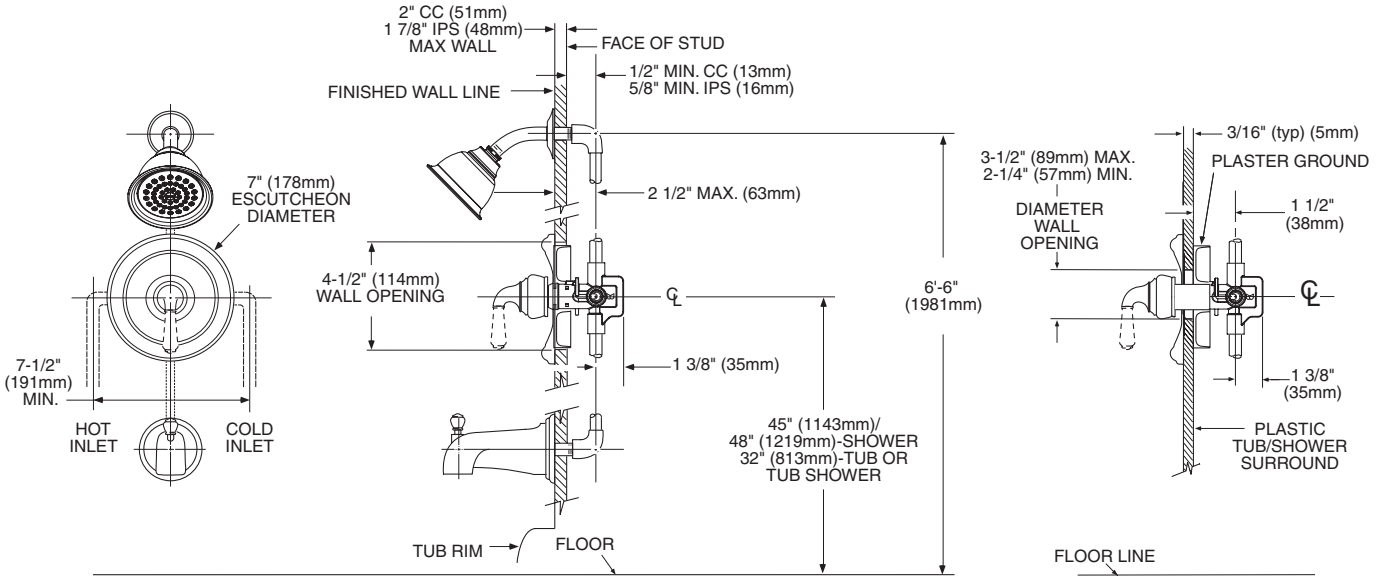

THICK WALL APPLICATION **THIN WALL APPLICATION**

CRITICAL DIMENSIONS

(DO NOT SCALE)