safety glazing
certification council

Administrative Office, AMS, Inc.
205 West Main Street, PO Box 730
Sackets Harbor, NY 13685
Phone: (315) 646-2234
E-mail: SGCC@amscert.com

ANAB
ANSI National Accreditation Board
ACCREDITED
ISO/IEC 17065
PRODUCT CERTIFICATION BODY
#0961

# ACKNOWLEDGEMENT OF CERTIFICATION

THIS IS TO ACKNOWLEDGE THAT AS OF THIS DATE

## Zhongshan Walle Glass Product Co., Ltd
## Zhongshan, Guangdong Province

IS A CURRENT LICENSEE AND HAS MET ALL GUIDELINES AND REQUIREMENTS FOR THE SGCC® CERTIFICATION PROGRAM AND AS SUCH IS ELIGIBLE TO LABEL THE BELOW INDICATED PRODUCT(S) AS SGCC® CERTIFIED. REPRESENTATIVE SAMPLES OF THE BELOW PRODUCTS HAVE BEEN FOUND TO BE IN COMPLIANCE WITH ANSI Z97.1-2015 AS INDICATED AND CPSC 16 CFR 1201 STANDARDS, KNOWN AS COMPOSITE CERTIFICATION (COMP), OR BOTH STANDARDS WITH CAN/CGSB 12.1-2022 KNOWN AS COMP+CAN.

### Tempered Transparent Glass

| SGCC# | IN | MM | Attributes | Type Code | Max Size | ANSI Class | Test Std |
|---|---|---|---|---|---|---|---|
| 8142 | 1/4 | 6 | | TTG | U | A | COMP+CAN |
| 8143 | 5/16 | 8 | | TTG | U | A | COMP+CAN |
| 8144 | 3/8 | 10 | | TTG | U | A | COMP+CAN |

THIS SGCC® PROGRAM CERTIFICATION IS CURRENT AND IN FULL EFFECT AS OF THIS ISSUE DATE. CERTIFICATION IN THE SGCC® PROGRAM IS SUBJECT TO SEMI-ANNUAL RENEWAL. PLEASE CHECK THE SGCC WEBSITE AT WWW.SGCC.ORG OR THIS OFFICE FOR MOST CURRENT INFORMATION.

| Wednesday, July 29, 2026 | L26 | |
|---|---|---|
| DATE OF ISSUE | CERTIFICATION PERIOD | ADMINISTRATIVE MANAGER |

Shower Door
1/4" glass (6mm)

Installation Dimensions:
55" - 60" W x 78" H

# S9811H INSTALLATION GUIDE

CAUTION:
To reduce the risk of breakage, keep corner protectors on the glass while installing. Keep any space corner protectors for later use in case future adjustments are needed.

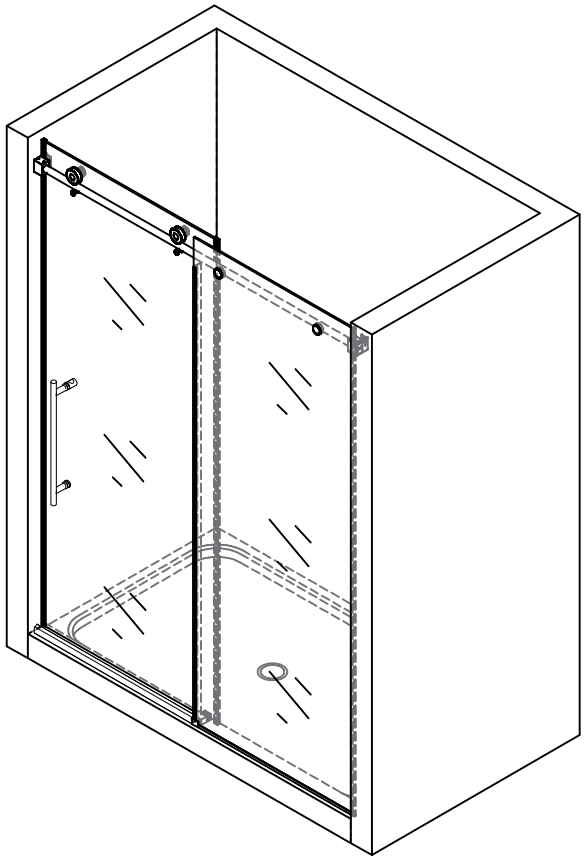

installation video

Please spend two minutes watching the installation video to save half an hour of installation time

Scan the QR code

# Table of Contents


| Section Title | Page # |
|---|---|
| Model Specific Preparation | 1 |
| Tools | 2 |
| Detailed Diagram of Shower Door Components | 3 |
| Parts List | 4 |
| Measure the finished opening width | 5 |
| Cut The Upper Top Rail | 6 |
| Positioning wall hole | 7 |
| Install rail wall connector (3) | 8 |
| Left Hand Assembly Installation Steps | 9-18 |
| Right Hand Assembly Installation Steps | 19-28 |
| Sealing | 29 |


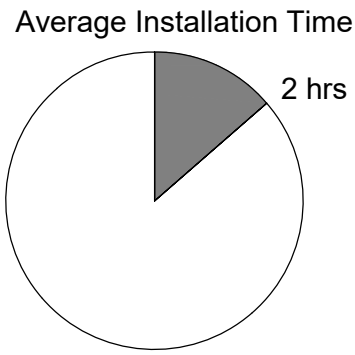

# Model Specific Preparation

## REQUIRED:

Verify threshold and walls with a level

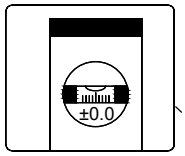


Threshold must be level

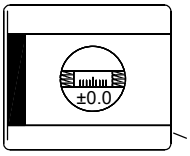


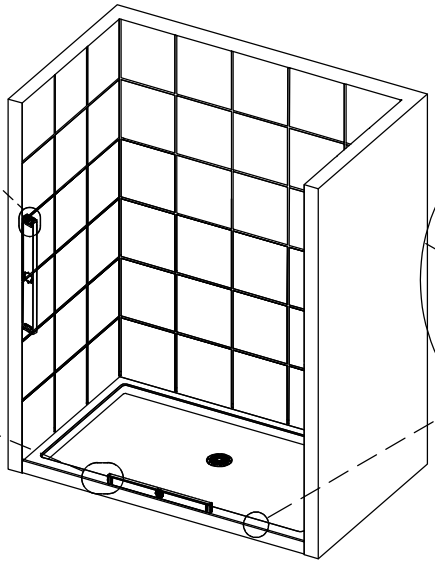

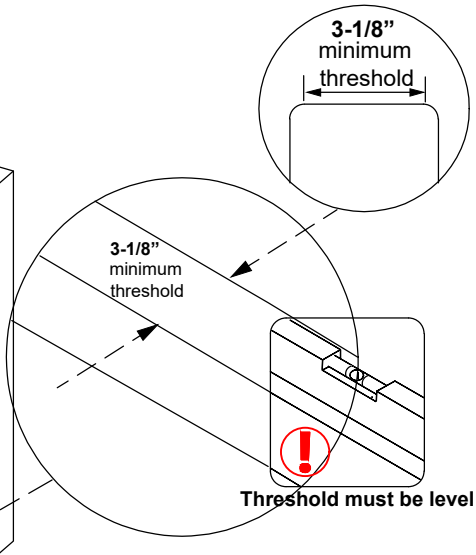


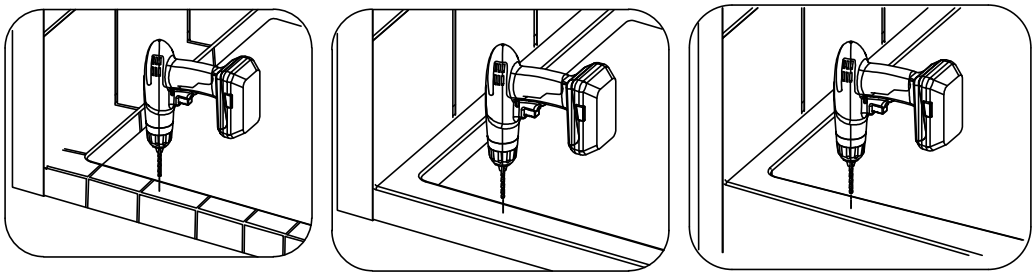

Thank you for purchasing this product. It can be installed by applying silicone sealant or drilling! Please check if the base or threshold can be drilled before installation!

Contact the manufacturer of the base, threshold material with any questions regarding the drilling of holes into their product.

Before installation, please check if there is enough space on the edge of the threshold to install the product. The minimum threshold requirement is 3-1/8" inch!

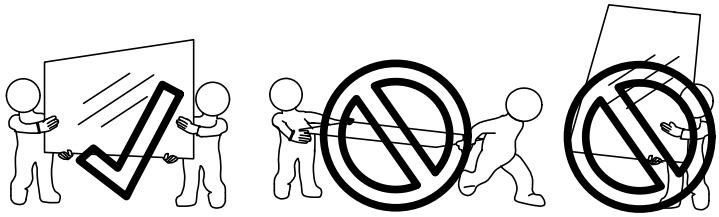

This door recommended professional installation. Two installers required.

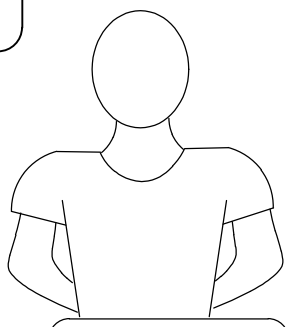

Professional Installation recommended.

# Tools



Level

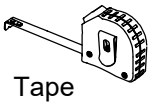

Tape Measure



Pencil

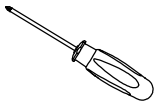

Phillips Screwdriver

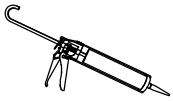

Silicone



Power Drill

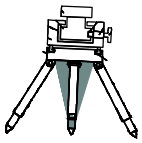

level gauge



Drill Bit Ø1/4" (6mm)



Drill Bit Ø5/16" (8mm)

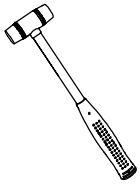

Soft Head Hammer

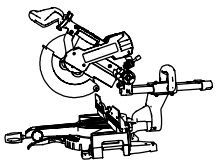

Mitre Saw

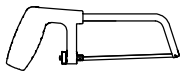

Hacksaw



Painter's Tape

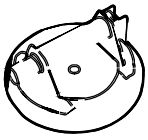

Professional-grade Glass suction cup



Safety Glasses



Work Gloves

TIP

Measure the finished opening before proceeding with the installation to be sure that the correct model size has been ordered.

TIP

Prior to installation, cover the shower drain with tape to prevent losing screws or small parts.

TIP

To prevent stripping the screw heads, set screw gun clutch to a low setting when installing screws and bolts.

NOTE

Unpack your unit carefully and inspect it. Lay it out and identify all parts using the **Detailed Diagram** on **page 4** and parts list in this manual as a reference. Before discarding the carton, check for small hardware bags that may have fallen to the bottom of the box. If any parts are damaged or missing, please contact us for replacement, The shipping boxes may contain extra parts not used in your model configuration.

NOTE

Retain these installation instructions for future reference.

# Detailed Diagram

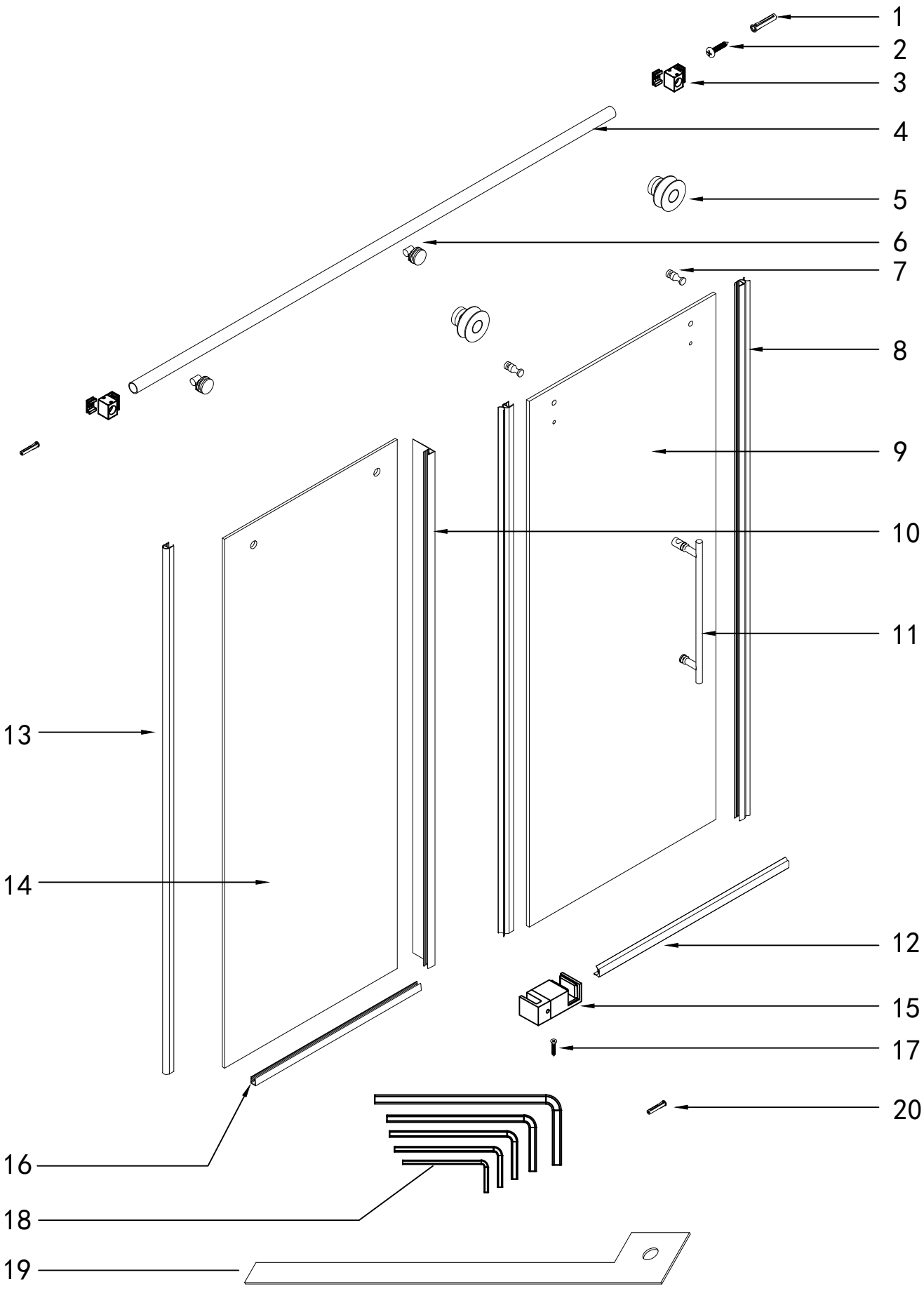

# PART LIST

**Check all parts according to the list before assembly**

| | | | | |
|---|---|---|---|---|
| 1  | 2 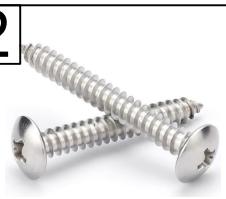 | 3  | 4 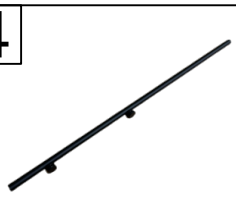 | 5  |
| **Ø8 Wall Anchor (4pcs)** | **ST5X45 Screw (4pcs)** | **Rail Wall Connector (2pcs)** | **Top Rail (1pc)** | **Roller Assembly (2pcs)** |
| 6  | 7  | 8 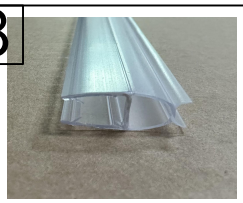 | 9  | 10 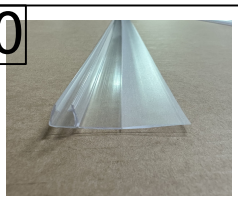 |
| **Pull Rod Fixing Part (2pcs)** | **Anti-Jumper (2pcs)** | **Bumper Strip (2pcs)** | **Sliding Panel (1pc)** | **F-form waterproof strip (1pc)** |
| 11  | 12 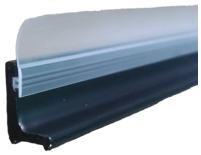 | 13 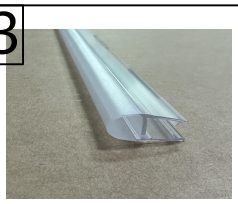 | 14 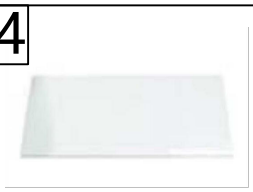 | 15  |
| **Handle (1pc)** | **Base Bar (1pc)** | **Waterproof strip (1pc)** | **Fixed Panel (1pc)** | **Sliding Block (1pc)** |
| 16 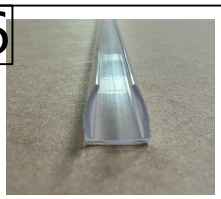 | 17  | 18  | 19  | 20  |
| **U-form waterproof strip (1pc)** | **ST4X35 Screw (2pcs)** | **Allen key (5pcs)** | **Template (1pc)** | **Ø6 Wall Anchor (2pcs)** |

* Utilize Safety Glasses and Safety Gloves when constructing this shower door
* We recommend that 2 people work together to complete  this installation

# STEP 1

## Measure the finished opening width.

NOTE

IMPORTANT: Incorrect measurement may prevent proper door closure. Double-check measurement.

Before beginning installation, verify the door assembly will fit within the horizontal opening of the shower enclosure.

Measure distance "W1" of upper shower enclosure opening and distance "W2" of lower shower enclosure opening.

Both measurements should be within the dimensions listed above for required opening widths.

W1 = Upper Enclosure Width
W2 = Lower Enclosure Width

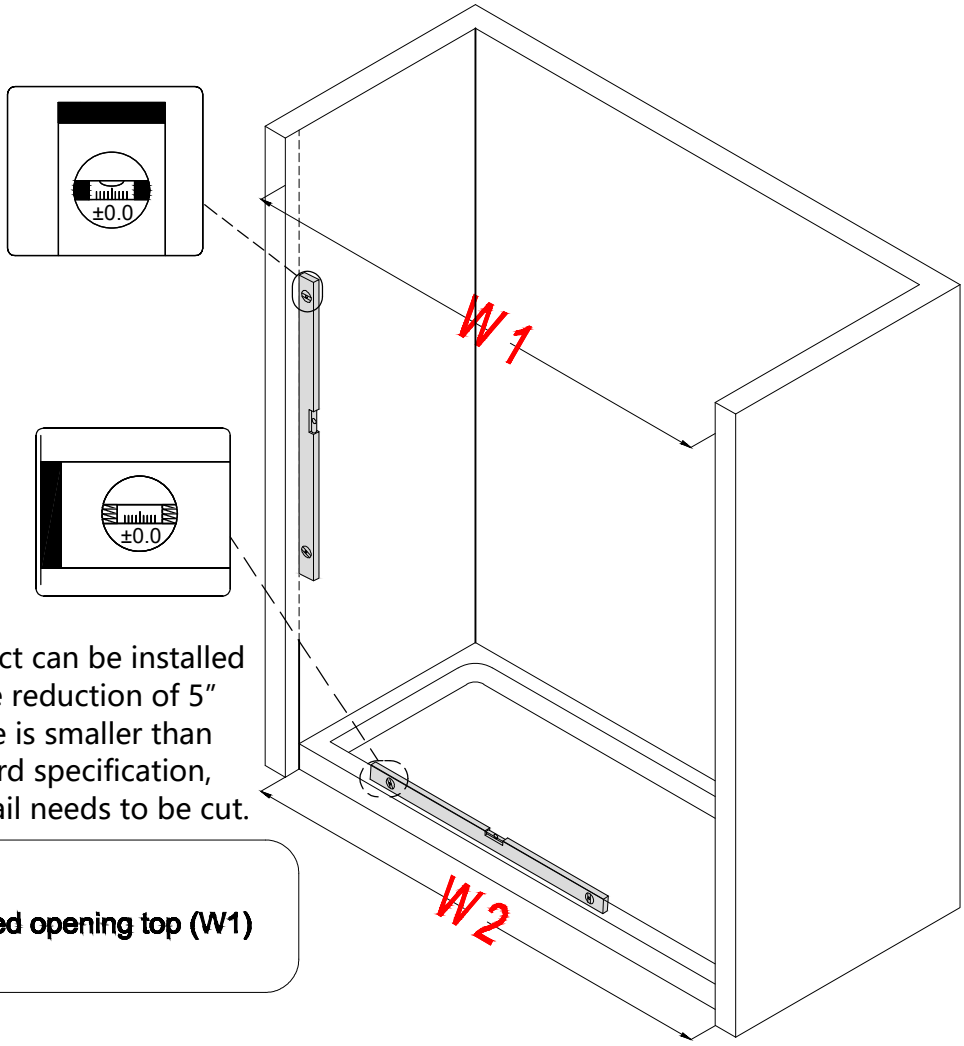


This product can be installed with a size reduction of 5”
If "W1" size is smaller than the standard specification,
The Top Rail needs to be cut.

_____ Finished opening top (W1)

# STEP 2

## Cut The Upper Top Rail ④



**W1**
***at model height**
**”**

**(-) 1” =**

**(L)**
***finished cut length**
**”**

Cut The Upper Top Rail ④ To: **“(L)”**

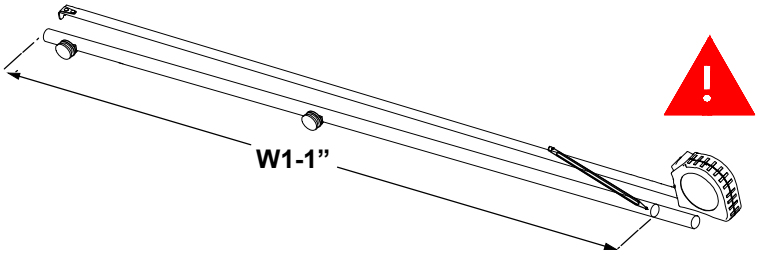


If W1 is smaller than the product specification, the Top Rail ④ needs to be cut to the appropriatesize, Up to 5 inch can be cut, It cannot be cut from the side of the pull rod fixing part ⑥

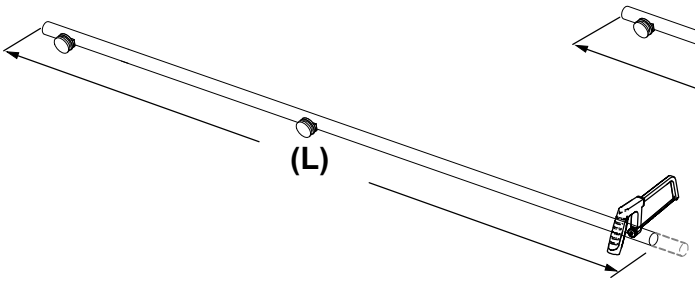


OR

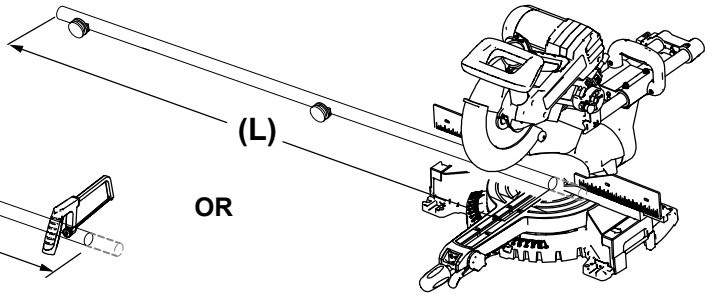


**TIP**

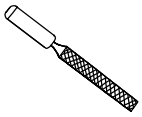

Use a metal file to deburr the cut end

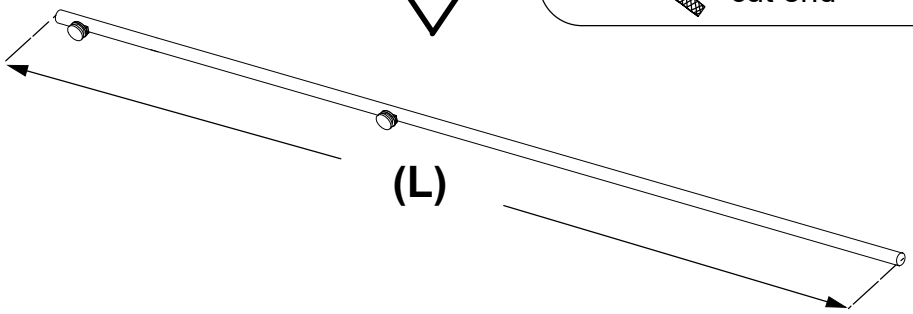


**NOTE**

The **Top Rail** ④ it **cannot be** cut from the side of the **pull rod fixing part** ⑥

# STEP 3

**Locate the installation position of the rail wall connector ③**

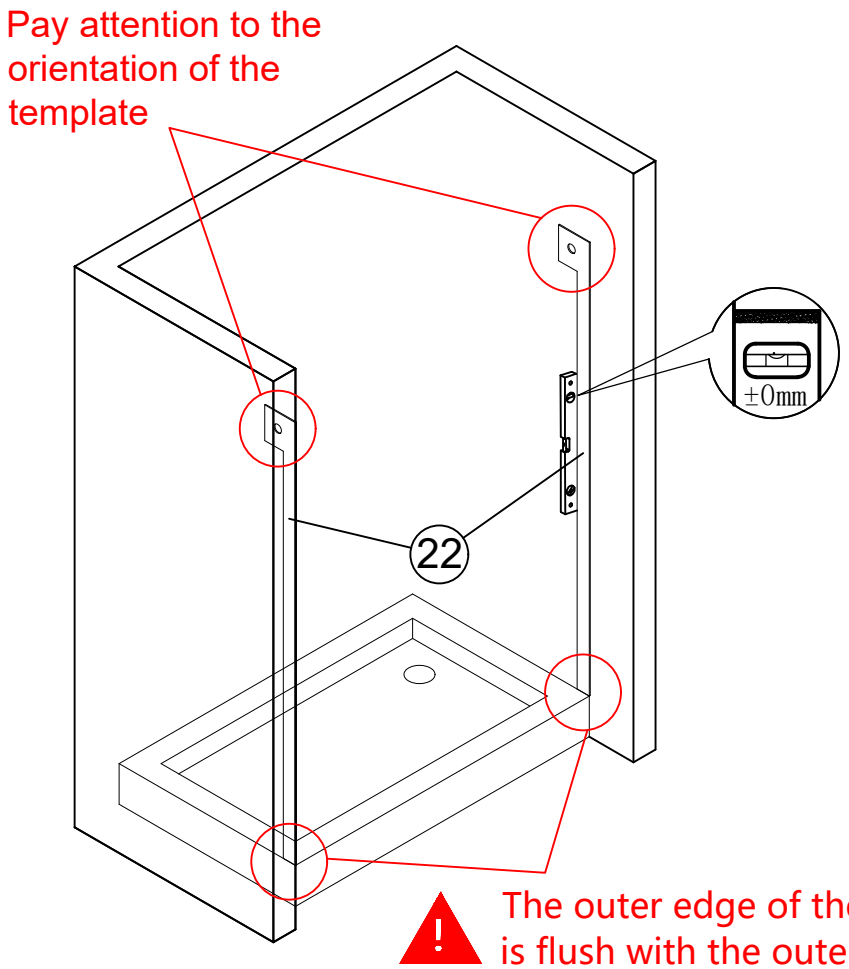


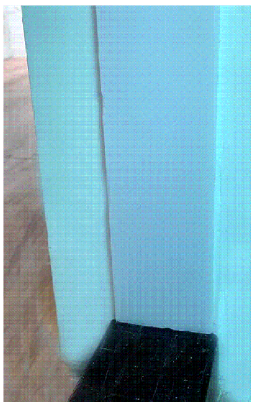

1.Lean the template on the wall.



2.Make sure to level the template.

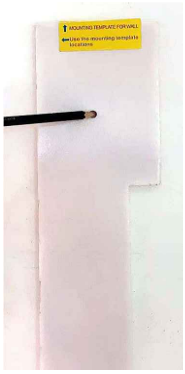

3.Use pencil to mark the hole



4.Drill a hole at the mark location.

# STEP 4

**Install rail wall connector ③**

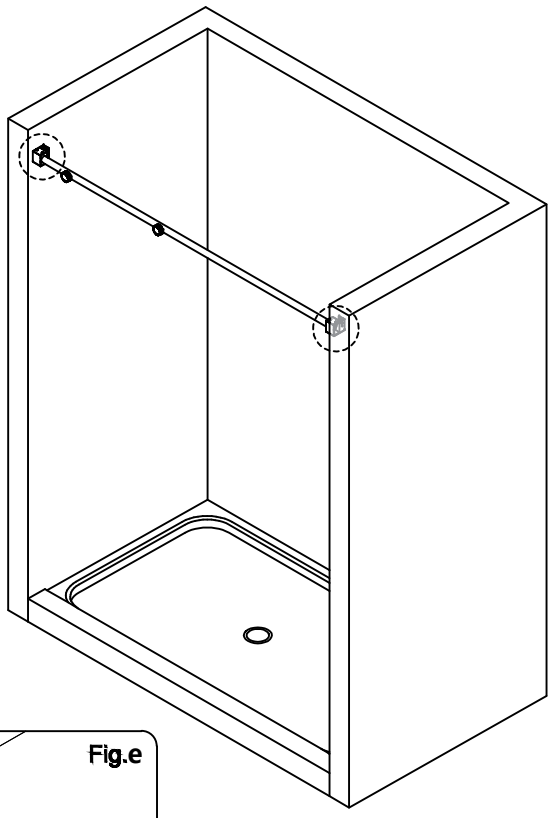

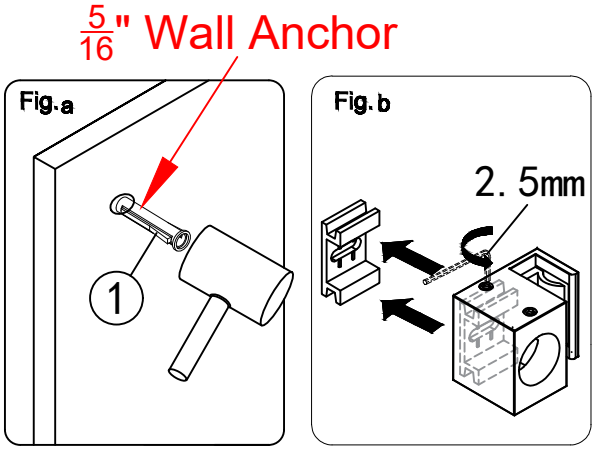


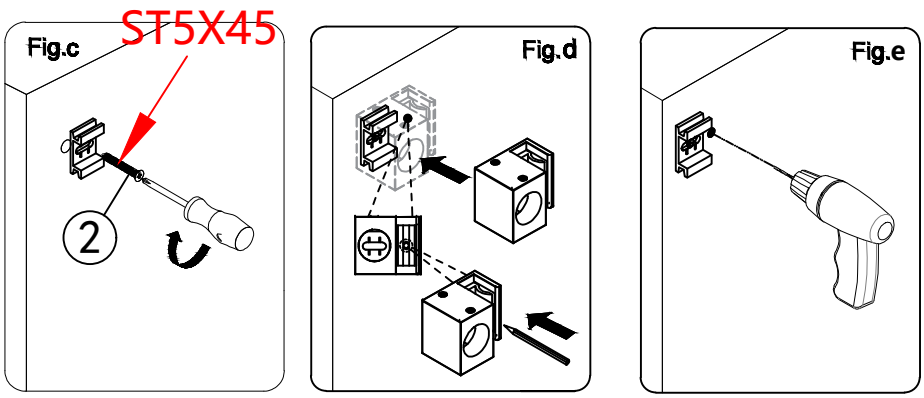


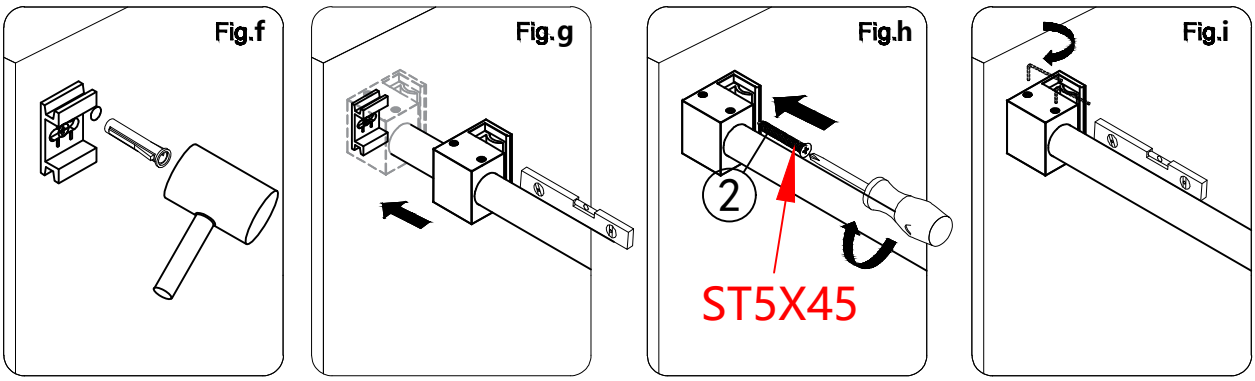

# STEP 5-1

**(Left Hand Assembly)**

**Preparation work before installing the Fixed Panel ⑭**

1. Use the Allen key to loosen the outer shell and remove it.

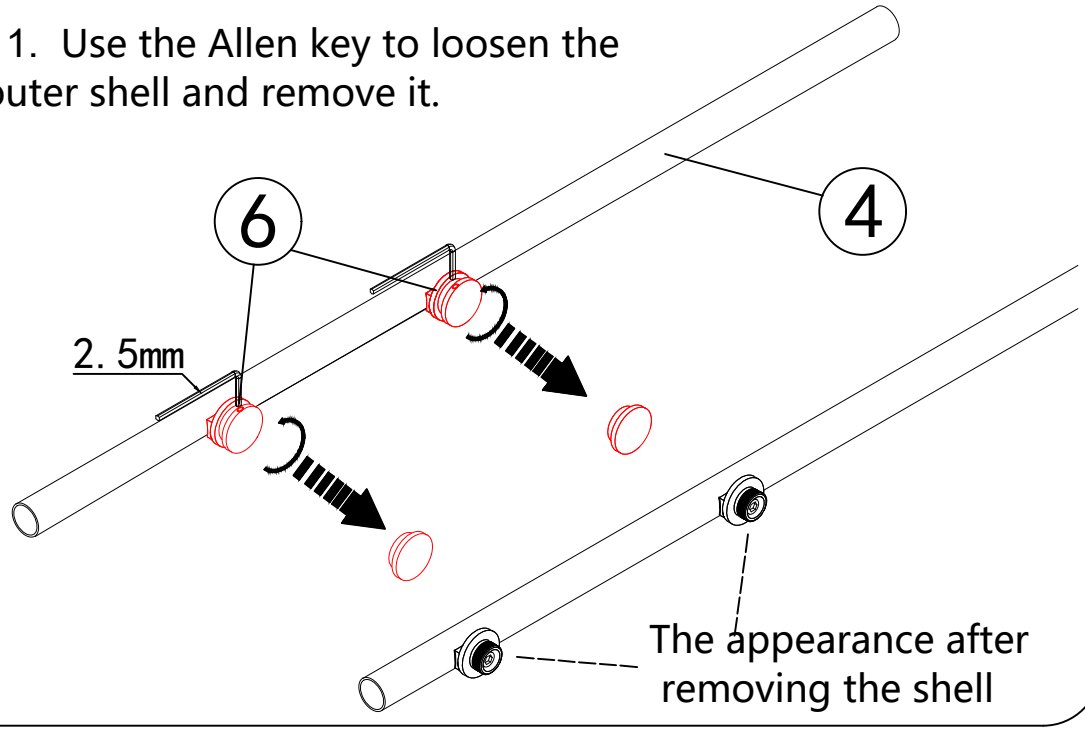

# STEP 5-2

**(Left Hand Assembly)**

**Install the roller assembly ⑤ on the sliding panel ⑨**

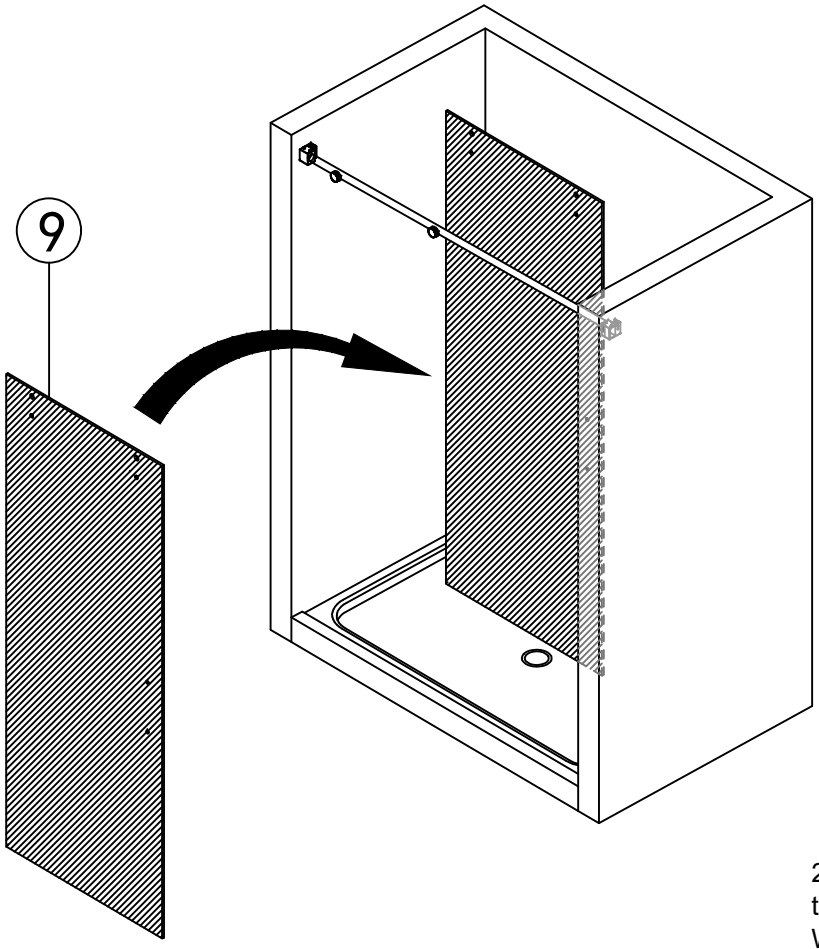


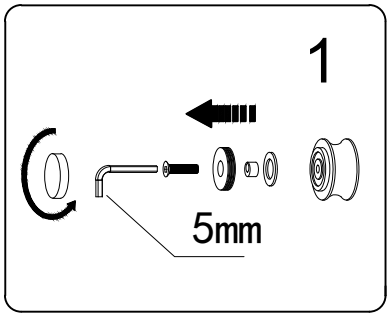


1. Disassemble the roller assembly ⑤ as shown, unscrew the cover and loosen the big bolt.

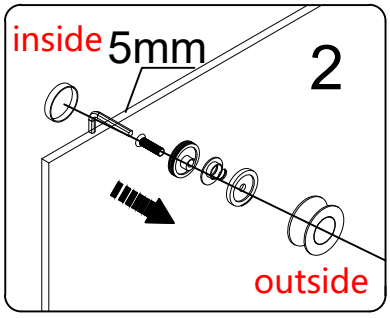


2. Reassemble the two roller assembly ⑤ onto the sliding panel ⑨ as shown in the picture. When finished, move the sliding panel ⑨ to the shower area.

Move the active panel to the shower area.
Lay the glass on a soft padded surface!

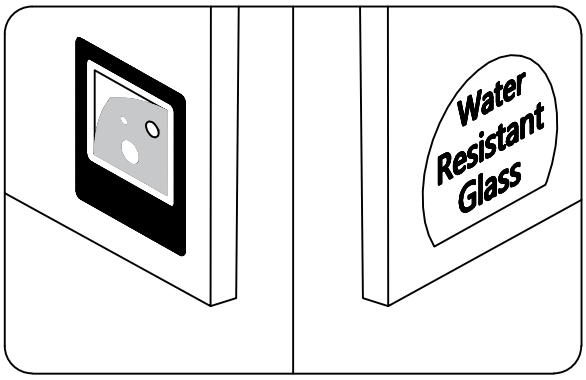


Note:The active glass is double-sided nano , can be freely installed.

# STEP 5-3

**(Left Hand Assembly)**

**Install the fixed panel (14) on the top rail (4)**

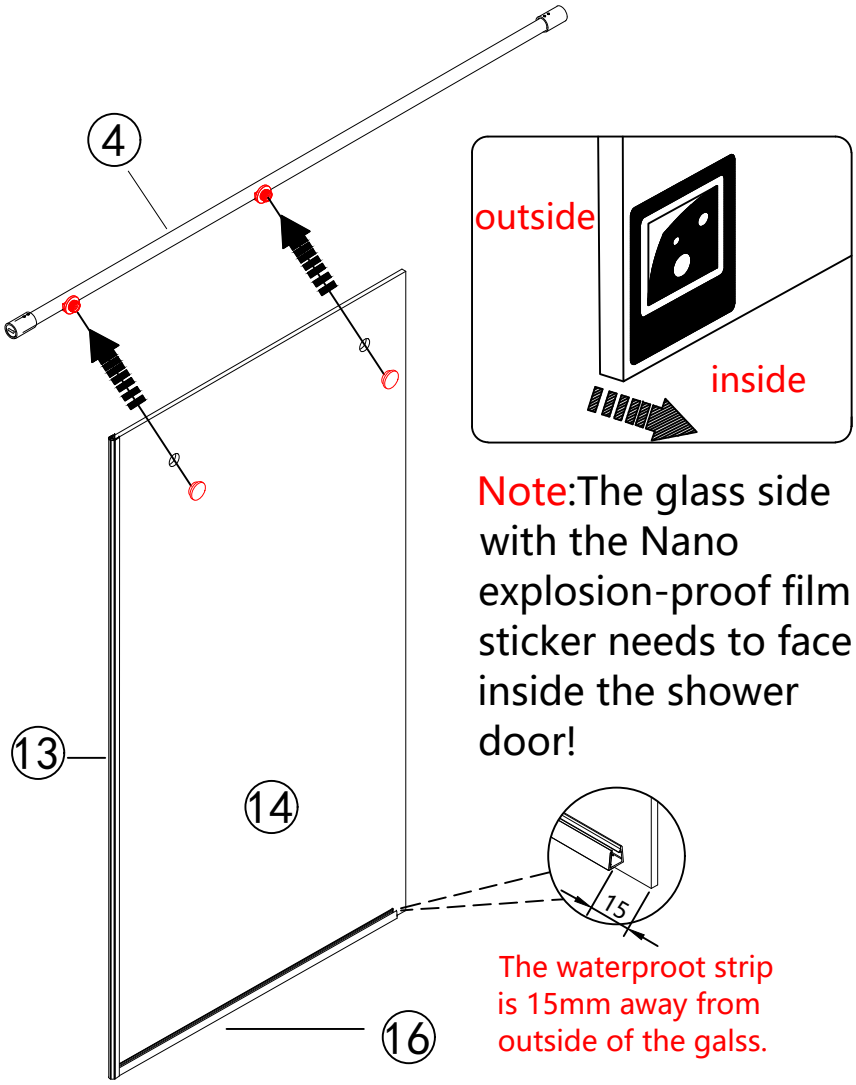





Note:The glass side with the Nano explosion-proof film sticker needs to face inside the shower door!

The waterproot strip is 15mm away from outside of the galss.

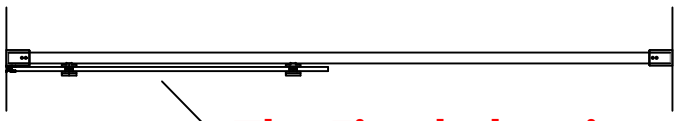

**The Fixed glass is installed on the outside of the shower room**

1.Install waterproof strip (13) (16) on fix panel.

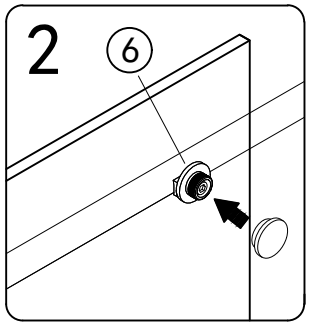


2.Hang the Fix Panel (14) onto the Top Rail (4).

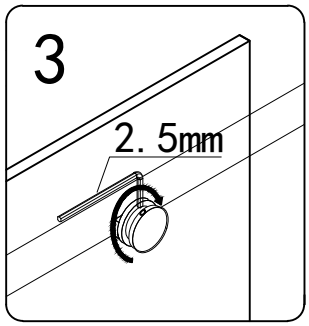


3.Screw on the cover of Pull Rod Fixing Part (6). Use the 2.5mm Allen wrench to tighten it.

# STEP 5-4

**(Left Hand Assembly)**

## Install the Sliding block ⑮

**Fig.a**

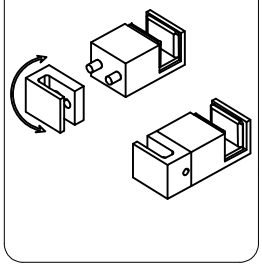

1. As shown in Fig.a, sliding block ⑮ rotation direction can be changed.

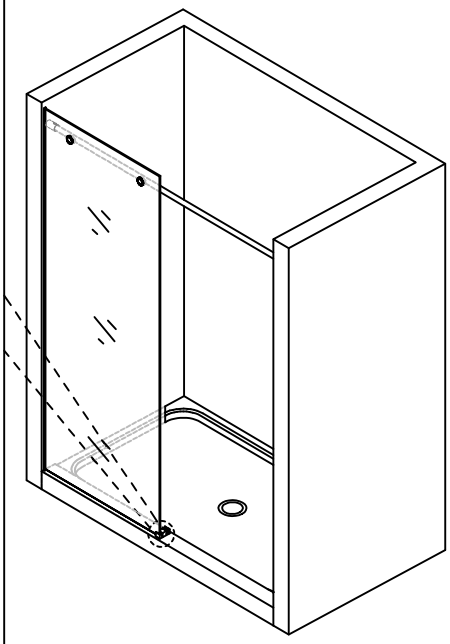

**Fig.b**

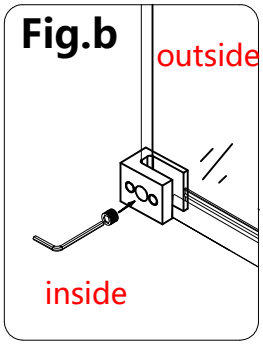


2 .As shown in Fig.b,sliding block ⑮ is fitted in the overlapping section of the fixed panel ⑭ and the sliding panel ⑨, then tightened with a 4 mm allen key.

**Fig.c**

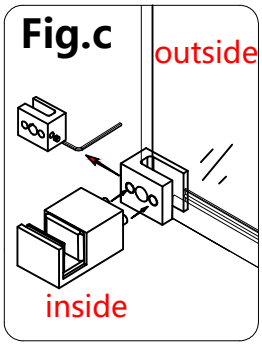


3. As shown in Fig.c, insert the locating pin of the sliding block ⑮ into the hole position and tighten it with a 2.5 mm allen key.

Note: The screws should not be tightened too much, just right is fine, too much tightness will cause the sliding glass to be not smooth when pushed and pulled.

**Fig.d**

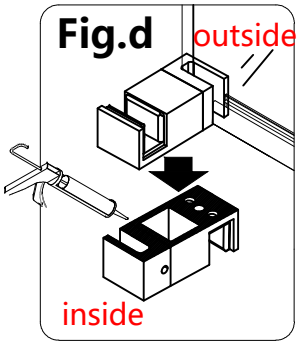


4. If the ground connot be drilled, please fixed it sliding block ⑮ using glass glue, as shown in Fig.d . If the ground can be drilled, secure the sliding block ⑮using ST4X35 screws ⑰ , as shown in Fig.e.

**Fig.e**

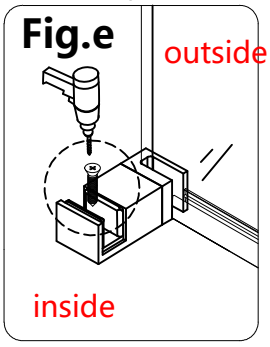

# STEP 5-5

**(Left Hand Assembly)**

**Install the sliding panel ⑨**

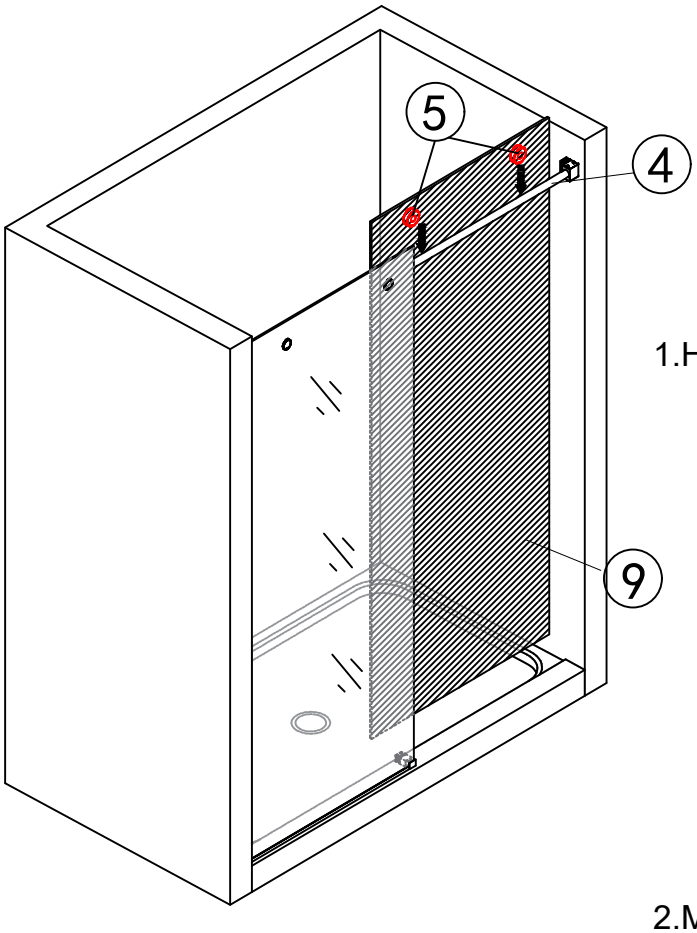


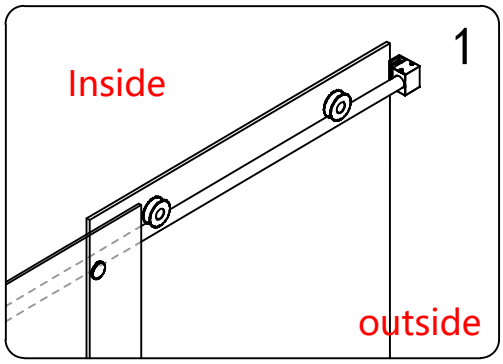


1.Hang the sliding panel ⑨ on the top rail ④.

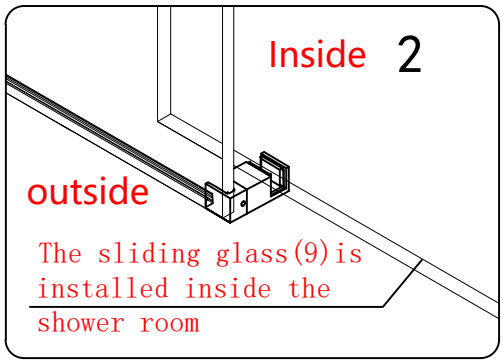


2.Make sure the bottom of the sliding panel loaded into the sliding block ⑮.

# STEP 5-6

**(Left Hand Assembly)**

**Adjust the height of the sliding panel ⑨ to ensure it is parallel to the wall surface**

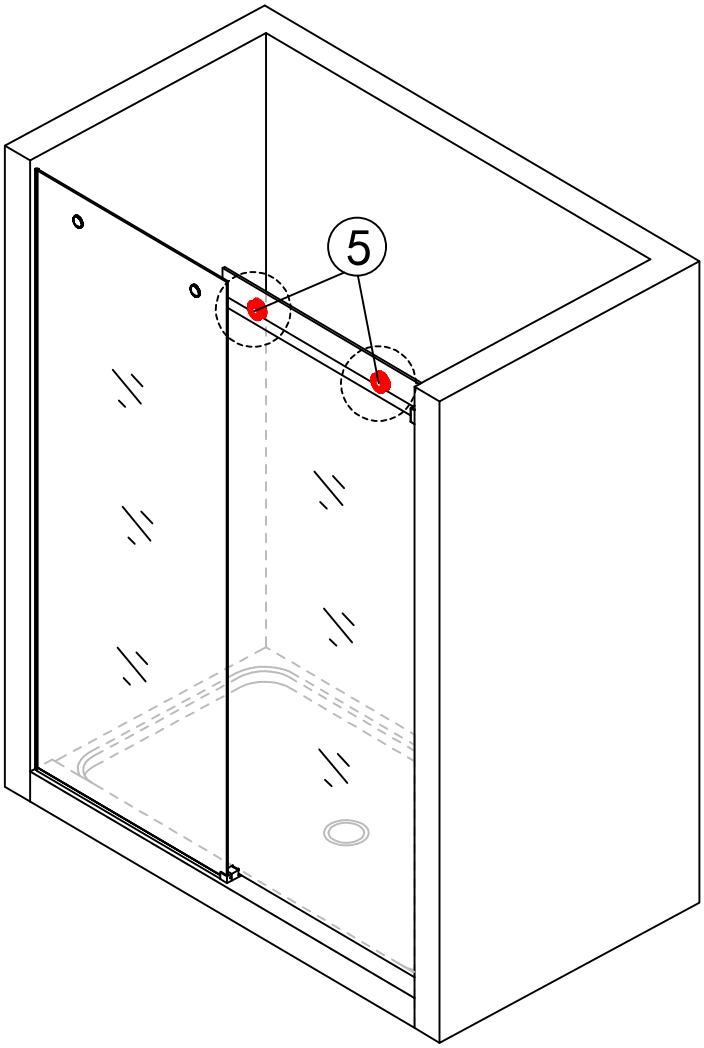


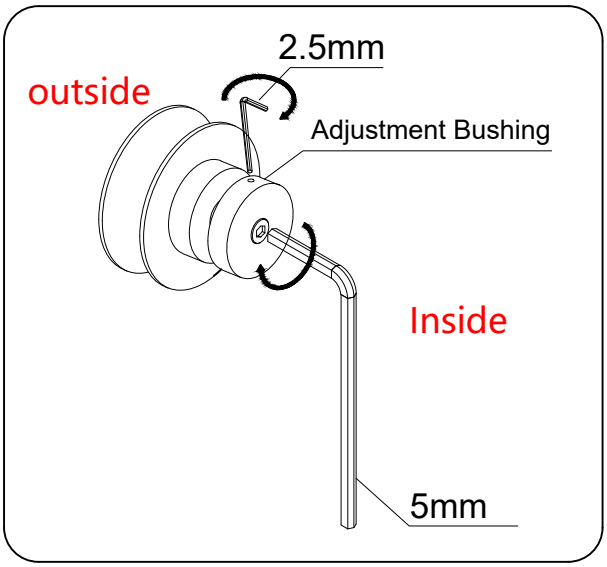


1.Use 2.5mm Allen key to rotate the eccentric shaft of the roller, adjust the height of the sliding panel.
2.Use 5mm Allen key to tight the roller.

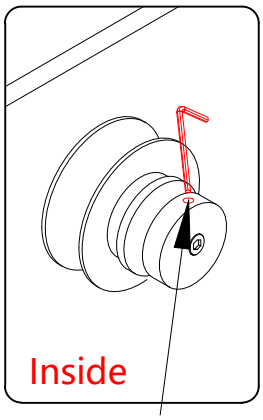


When the position of the small hole is facing upwards, the height of the sliding panel ⑨ is the lowest

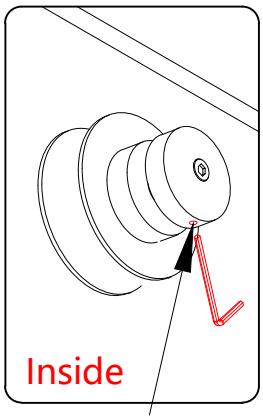


When the position of the small hole is facing downwards, the height of the sliding panel ⑨ is the highest

# STEP 5-7

**(Left Hand Assembly)**

**Install the Anti-Jumper ⑦ on the sliding panel ⑨**

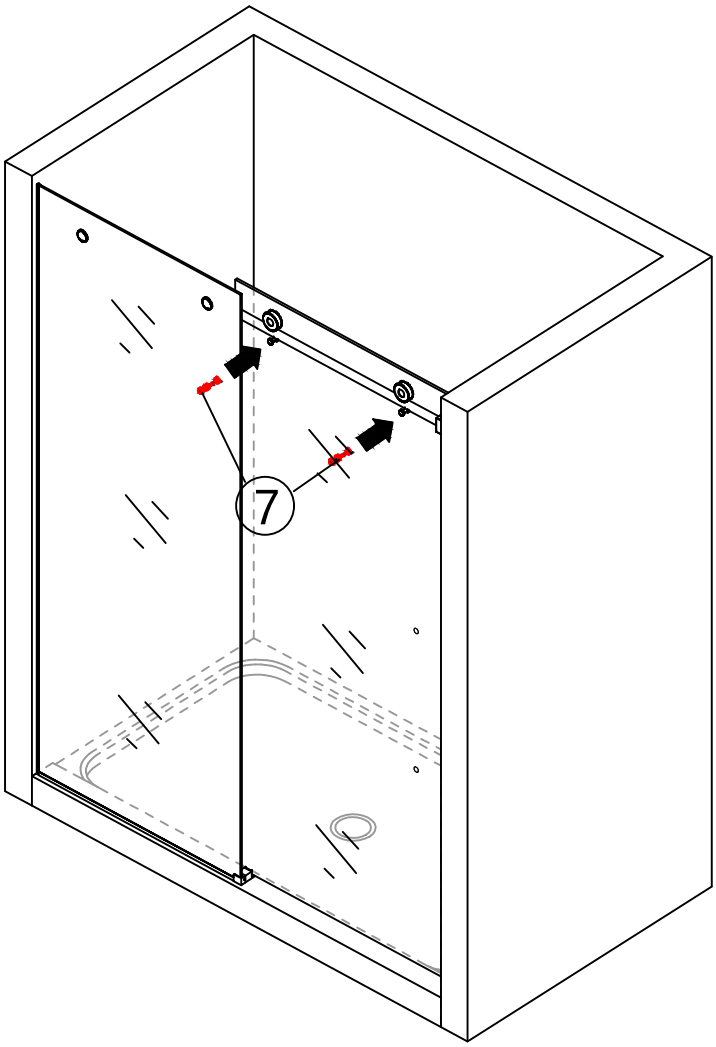


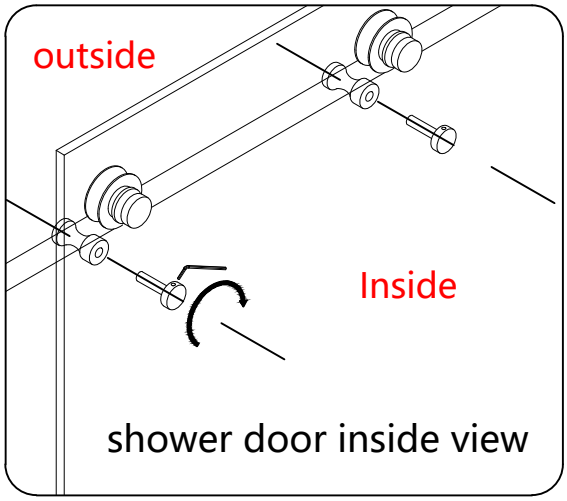


1.Install the Anti-Jumper ⑦ outside the sliding panel ⑨ .
2.Use 2.5mm Allen wrench to tight inside.

# STEP 5-8

**(Left Hand Assembly)**

**Install the Bumper Strip ⑧ and F-form waterproof strip ⑩ .**

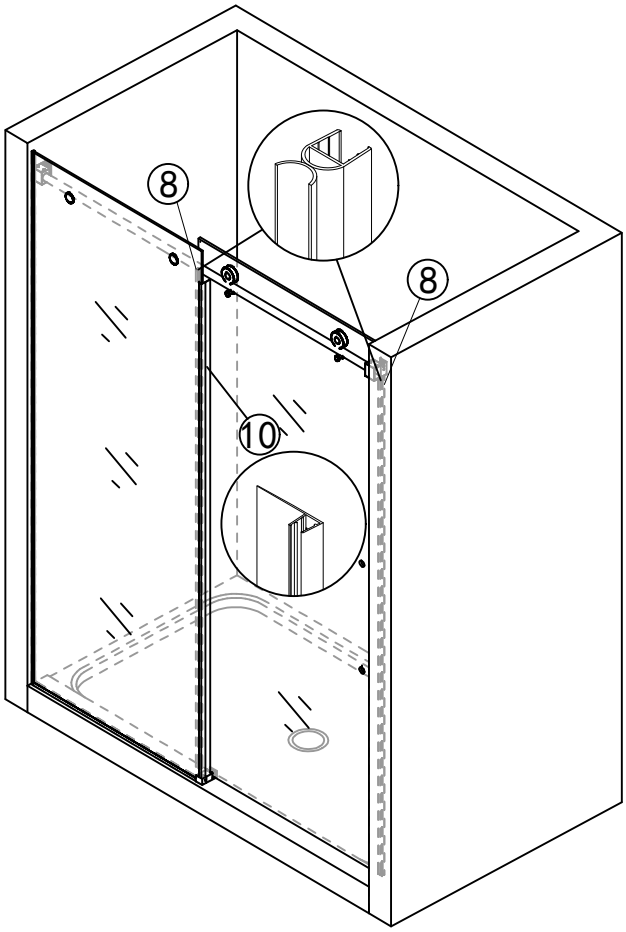


The bumper strip ⑧ here needs to be cut shorter than the rail wall connector ③

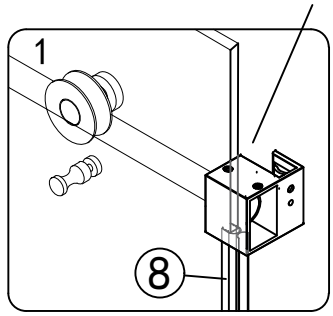


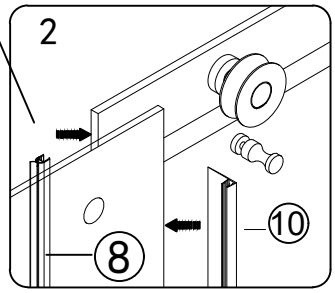


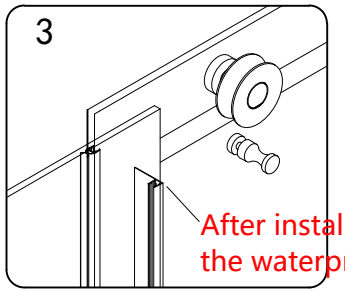


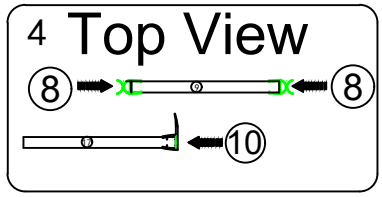


After installing the shower door,cut the waterproof strip under the track

# STEP 5-9

**(Left Hand Assembly)**

**Install the Handle ⑪ .**

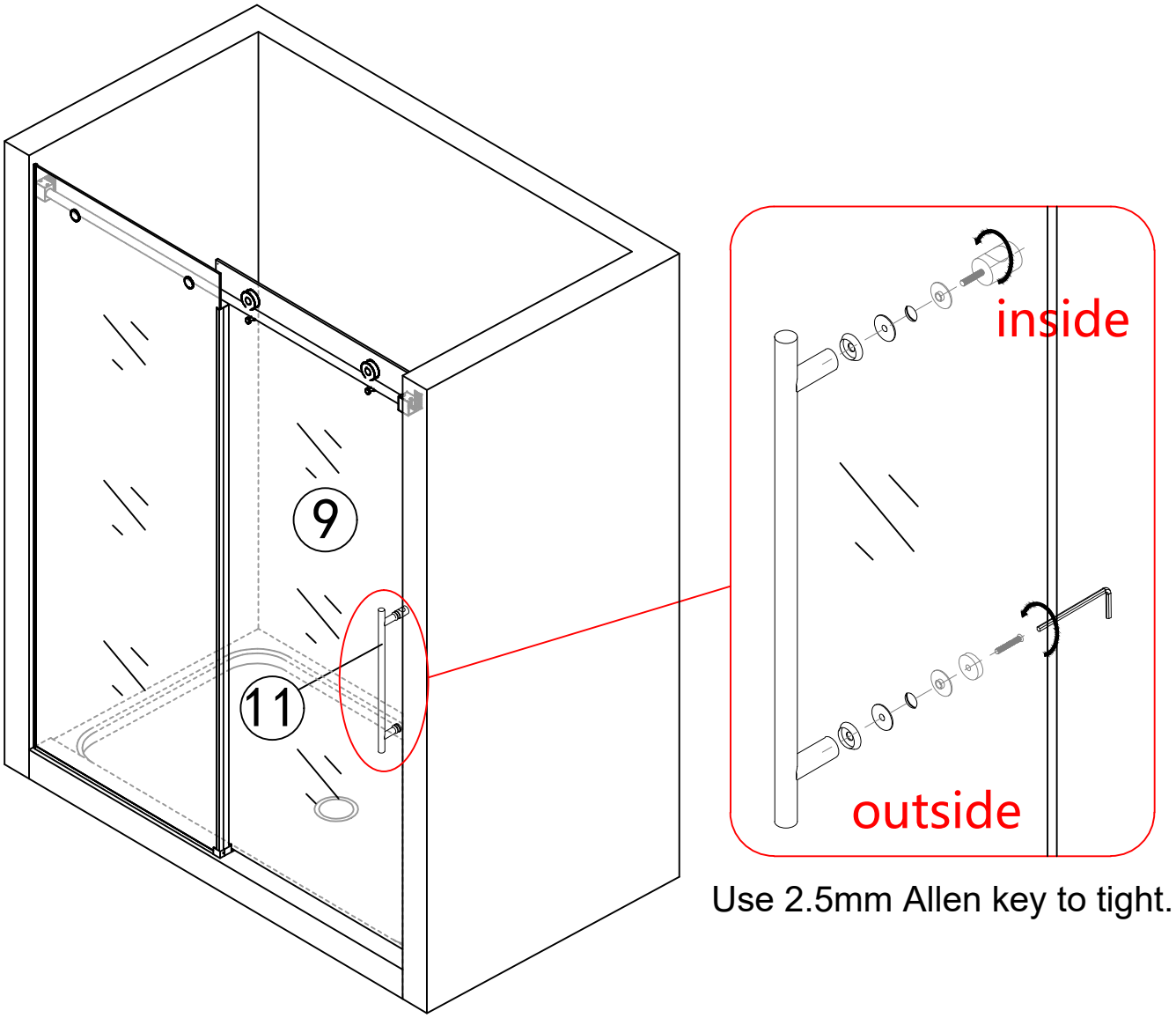


Use 2.5mm Allen key to tight.

# STEP 5-10

**(Left Hand Assembly)**

**Install the base bar ⑫ .**

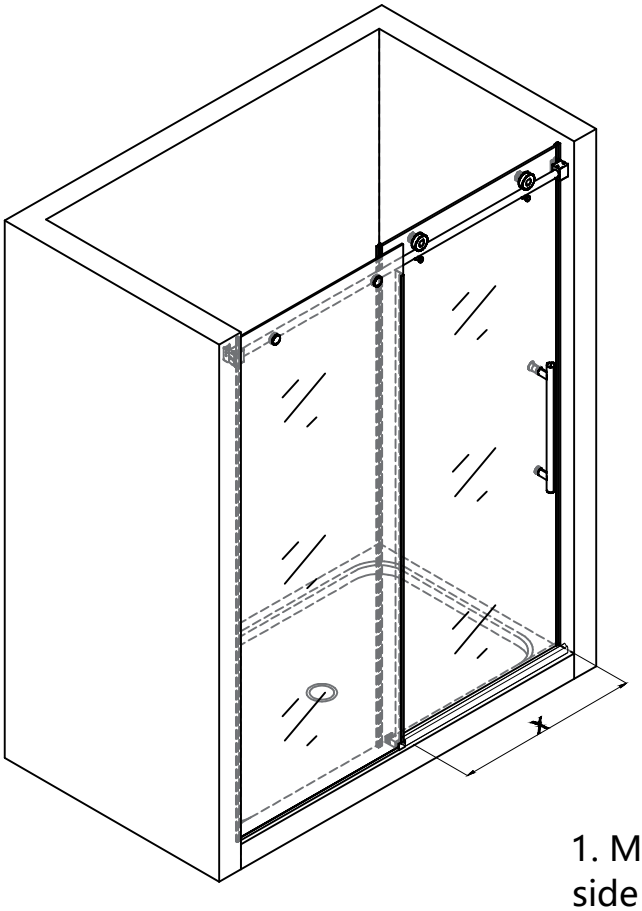


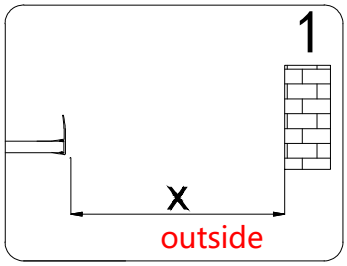


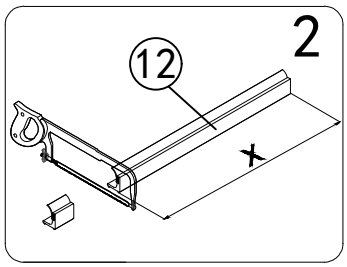


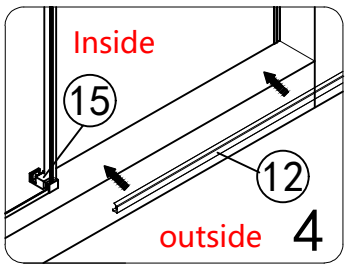


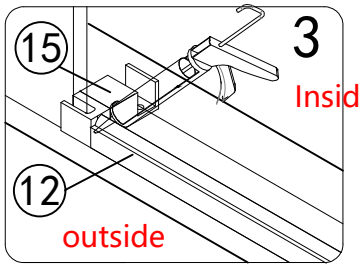


1. Measure "x" , "x" is the distance from the right side of the fixed panel ⑭ to the wall.
2. According to the vaule of the "x" to cut base bar ⑫
3. Place the base bar ⑫ parallel to the Sliding block ⑮ under the glass
4.Secure base bar ⑫ with glass gule.

# STEP 5-11

**(Right Hand Assembly)**

**Preparation work before installing the Fixed Panel ⑭**

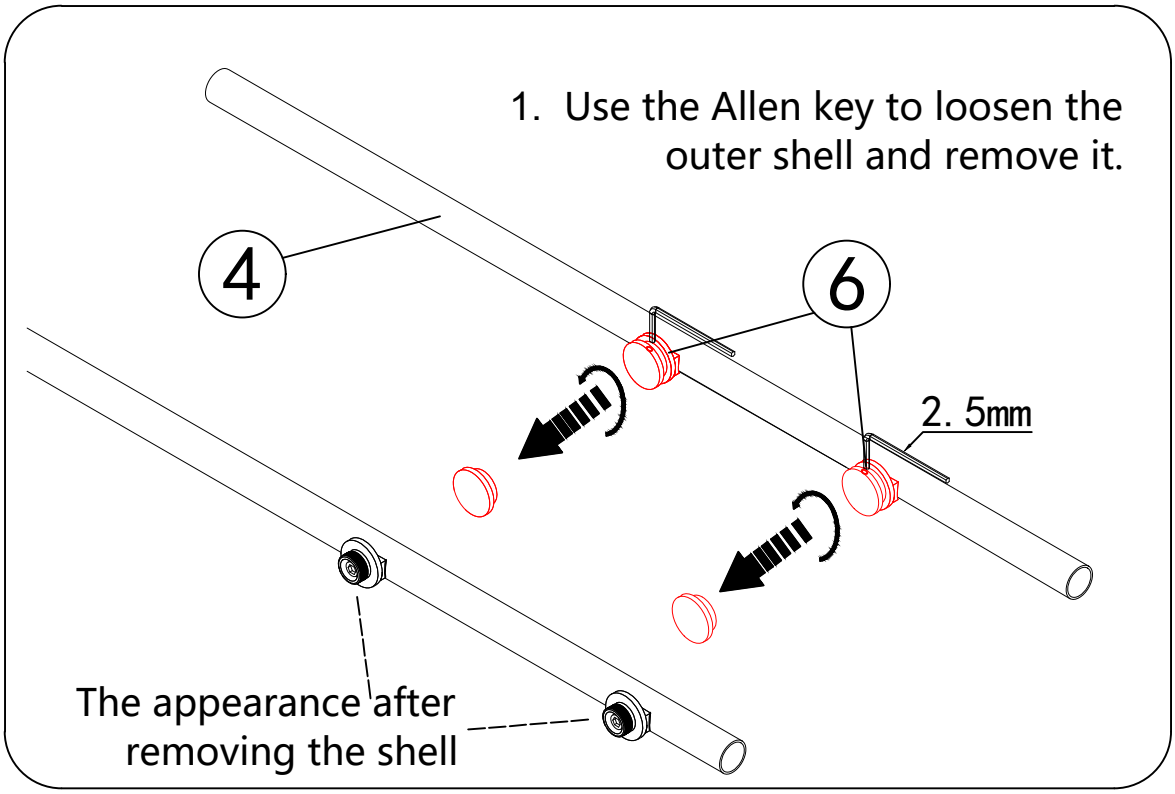

# STEP 5-12

**(Right Hand Assembly)**

**Install the roller assembly ⑤ on the sliding panel ⑨**

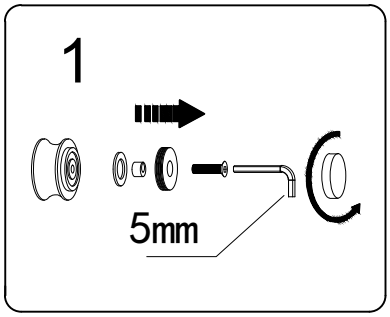


1. Disassemble the roller assembly ⑤ as shown, unscrew the cover and loosen the big bolt.

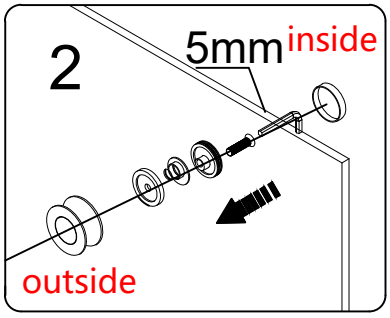


2. Reassemble the two roller assembly ⑤ onto the sliding panel ⑨ as shown in the picture. When finished, move the sliding panel ⑨ to the shower area.

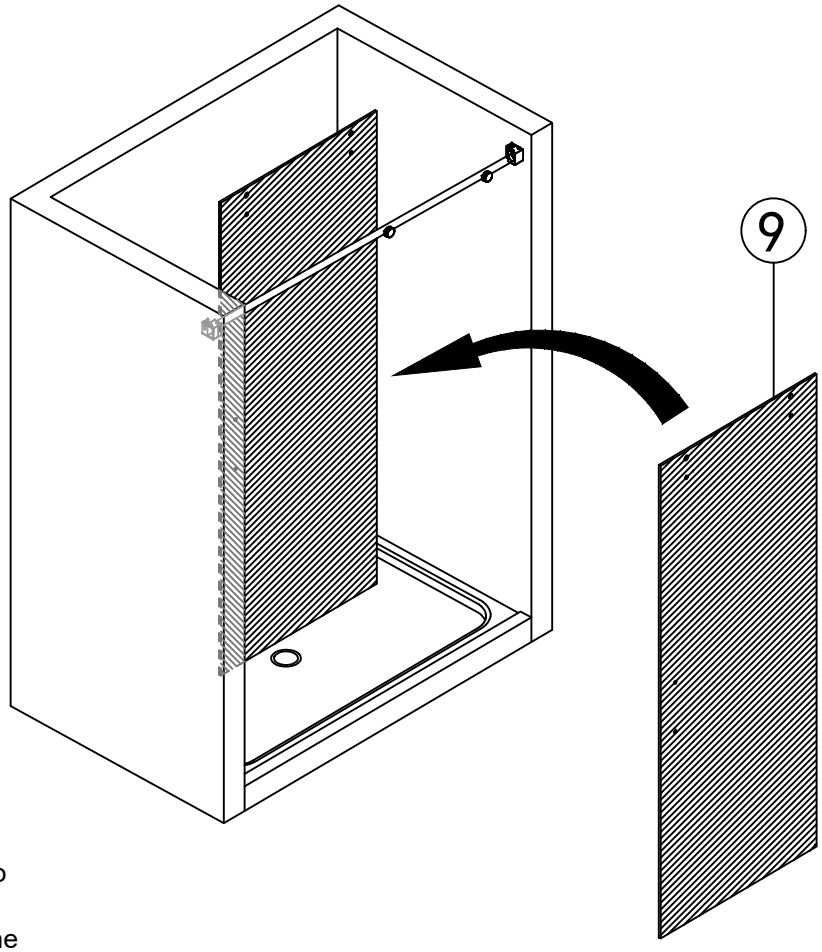


Move the active panel to the shower area.
Lay the glass on a soft padded surface!

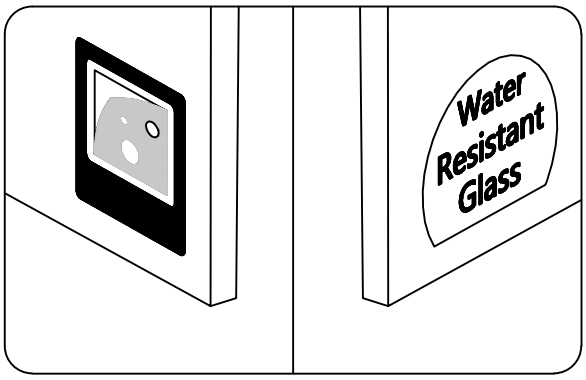


Note:The active glass is double-sided nano , can be freely installed.

# STEP 5-13

**(Right Hand Assembly)**

**Install the fixed panel ⑭ on the top rail ④**

1.Install waterproof strip ⑬ ⑯ on fix panel.

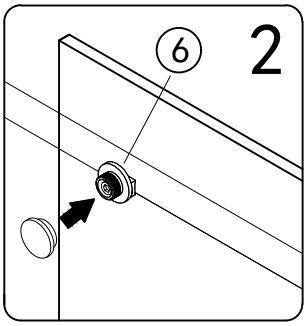


2.Hang the Fix Panel ⑭ onto the Top Rail ④.

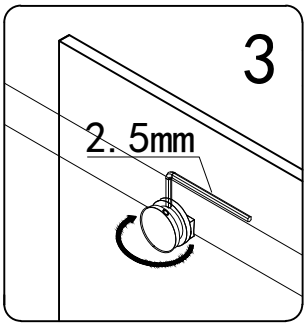


3.Screw on the cover of Pull Rod Fixing Part ⑥. Use the 2.5mm Allen wrench to tighten it.

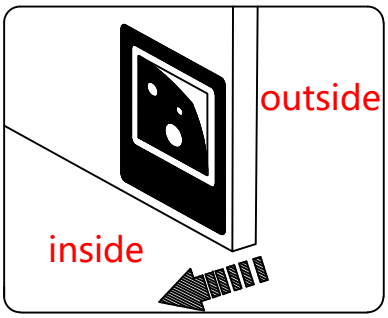


Note:The glass side with the Nano explosion-proof film sticker needs to face inside the shower door!

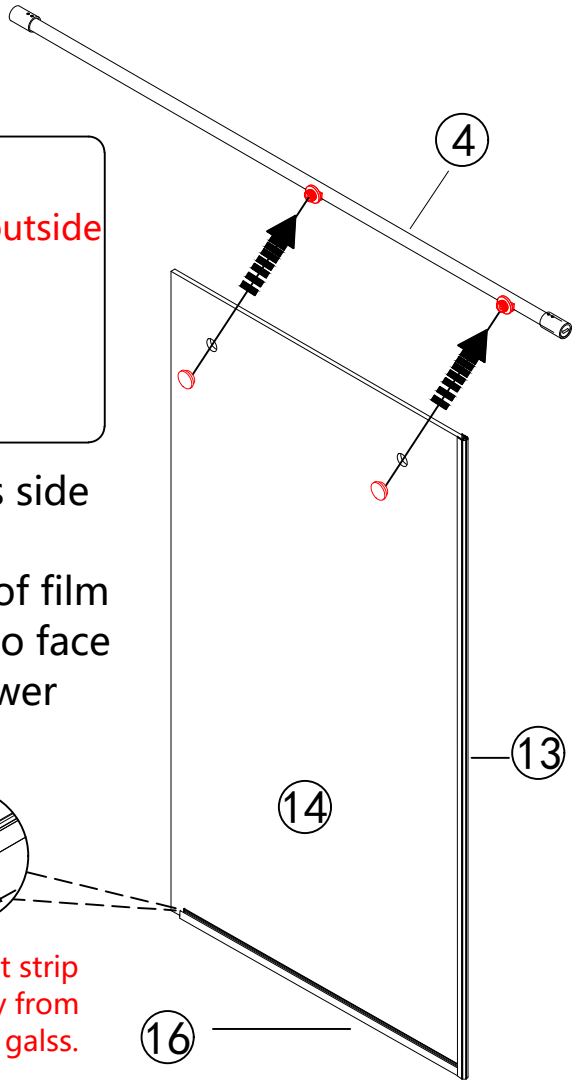


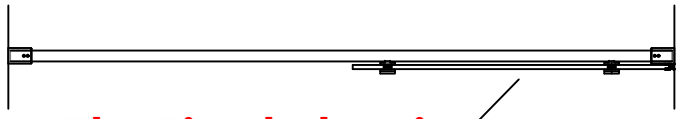

**The Fixed glass is installed on the outside of the shower room**

# STEP 5-14

**(Right Hand Assembly)**

## Install the Sliding block ⑮

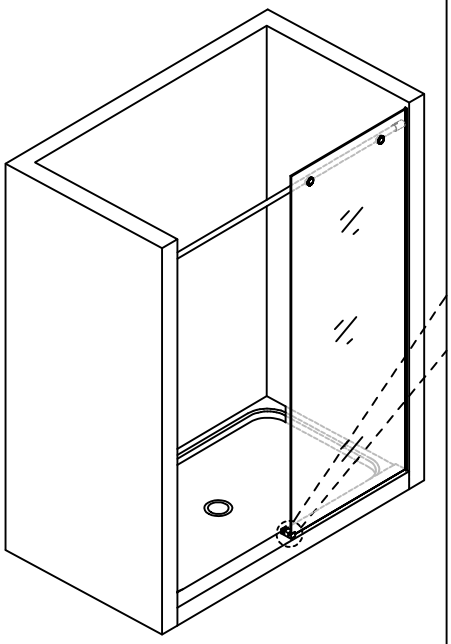

1. As shown in Fig.a, sliding block ⑮ rotation direction can be changed.

Fig.a

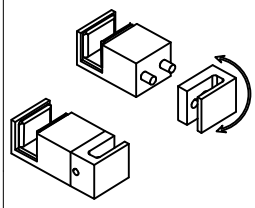

2 .As shown in Fig.b,sliding block ⑮ is fitted in the overlapping section of the fixed panel ⑭ and the sliding panel ⑨, then tightened with a 4 mm allen key.

Fig.b

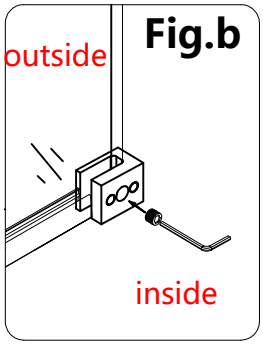


3. As shown in Fig.c, insert the locating pin of the sliding block ⑮ into the hole position and tighten it with a 2.5 mm allen key.

Fig.c

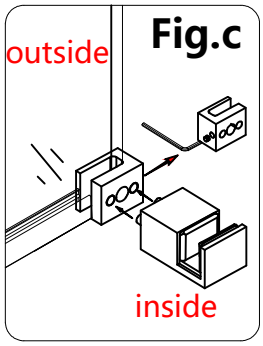


Note: The screws should not be tightened too much, just right is fine, too much tightness will cause the sliding glass to be not smooth when pushed and pulled.

Fig.e

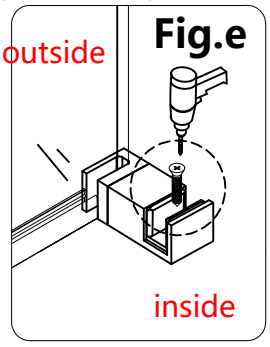


4. If the ground connot be drilled, please fixed it sliding block ⑮ using glass glue, as shown in Fig.d . If the ground can be drilled, secure the sliding block ⑮using ST4X35 screws ⑰ , as shown in Fig.e.

Fig.d

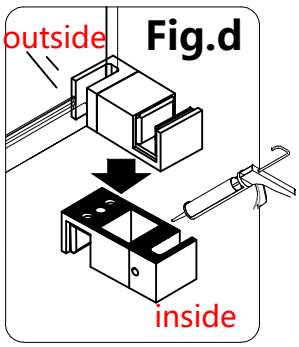

# STEP 5-15

**(Right Hand Assembly)**

**Install the sliding panel ⑨**

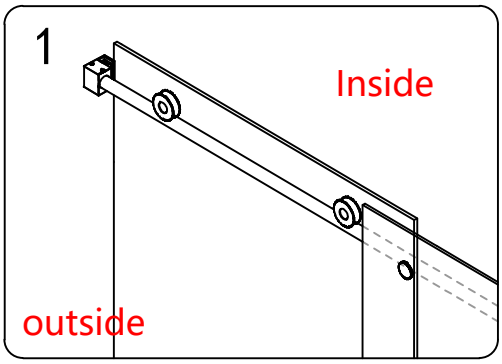


1.Hang the sliding panel ⑨ on the top rail ④.

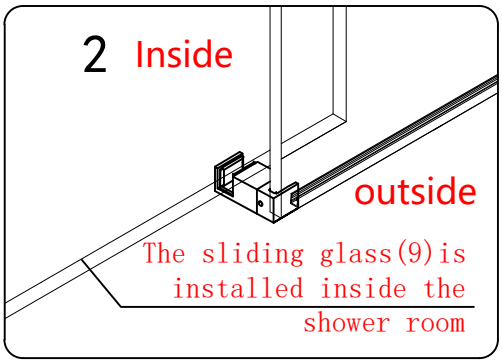


2.Make sure the bottom of the sliding panel loaded into the sliding block ⑮.

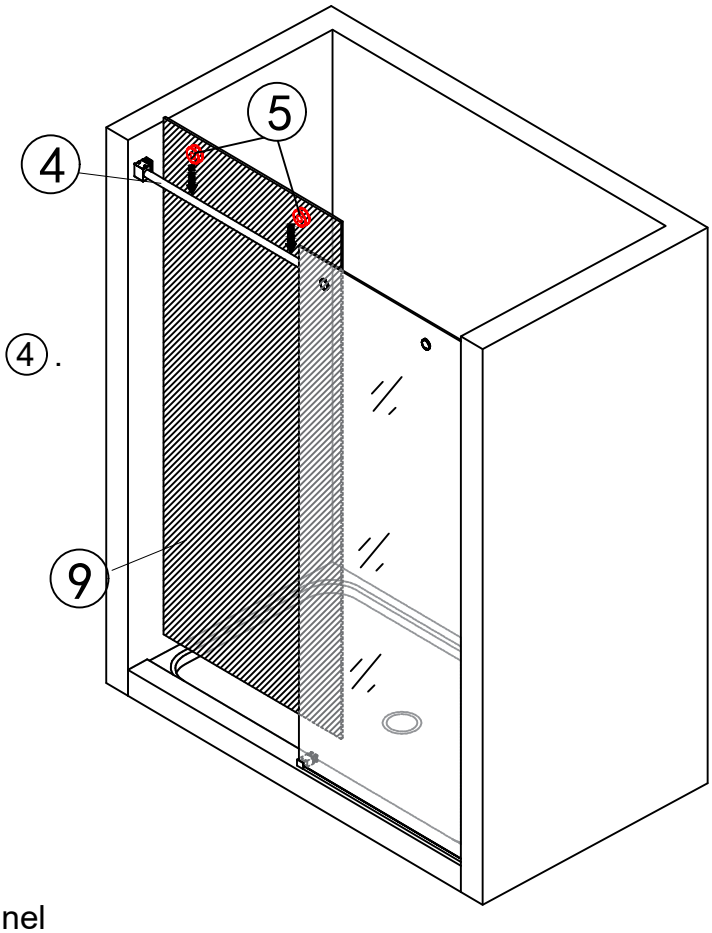

# STEP 5-16

**(Right Hand Assembly)**

**Adjust the height of the sliding panel ⑨ to ensure it is parallel to the wall surface**

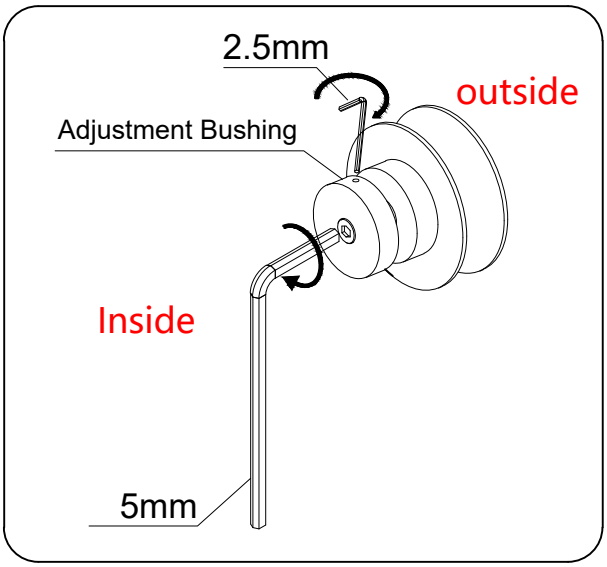


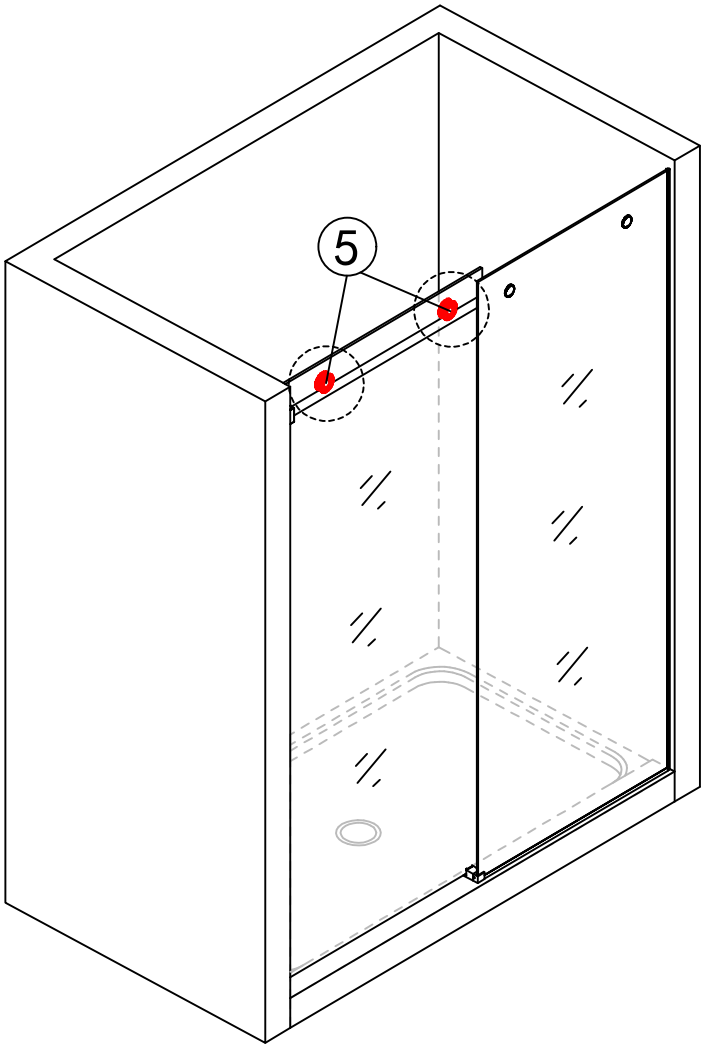


1.Use 2.5mm Allen key to rotate the eccentric shaft of the roller, adjust the height of the sliding panel.
2.Use 5mm Allen key to tight the roller.

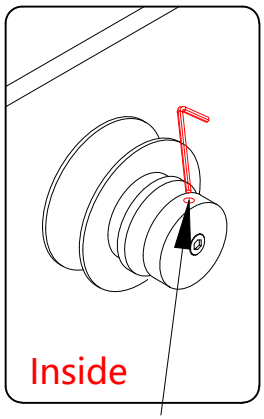


When the position of the small hole is facing upwards, the height of the sliding panel ⑨ is the lowest

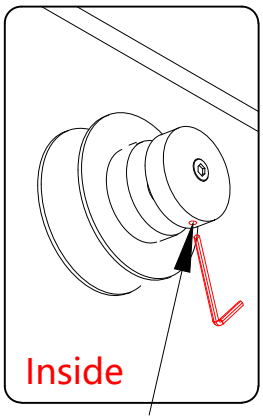


When the position of the small hole is facing downwards, the height of the sliding panel ⑨ is the highest

# STEP 5-17

**(Right Hand Assembly)**

**Install the Anti-Jumper ⑦ on the sliding panel ⑨**

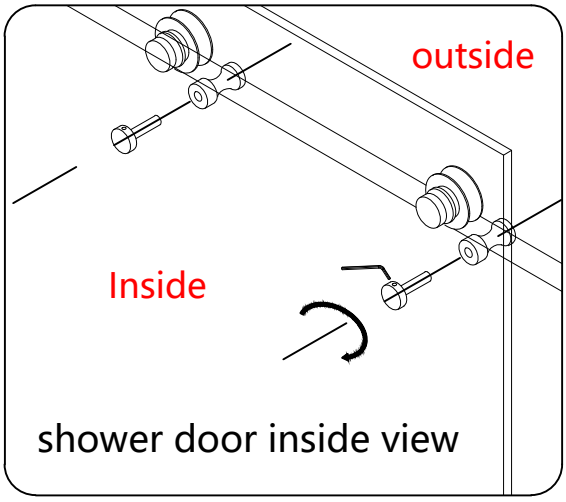


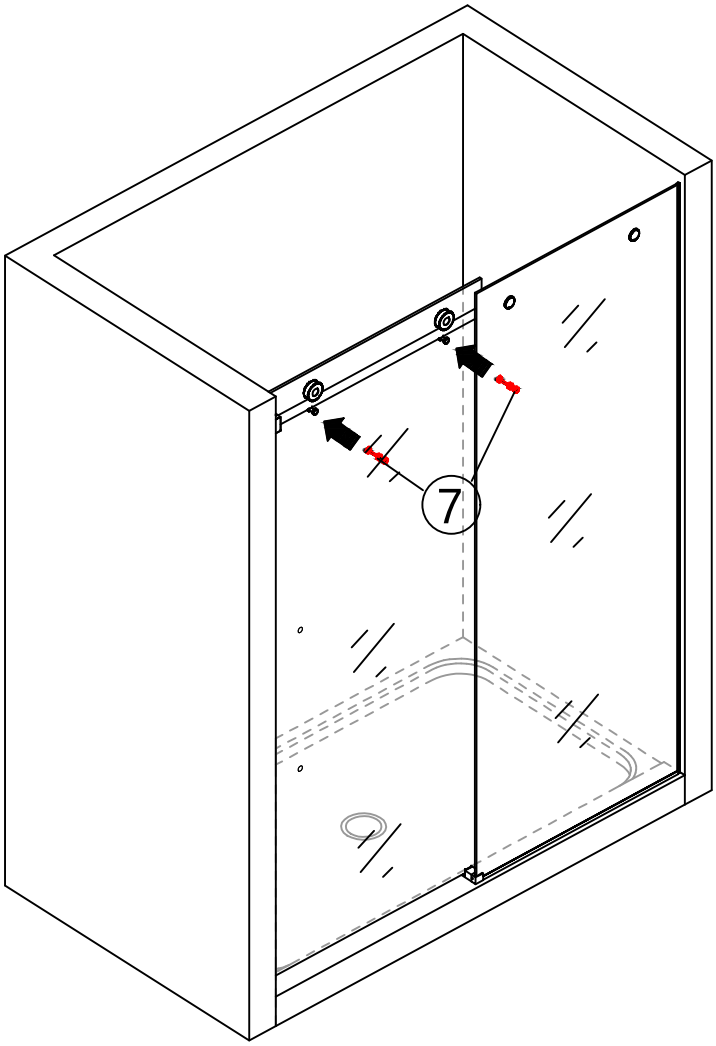


1.Install the Anti-Jumper ⑦ outside the sliding panel ⑨ .
2.Use 2.5mm Allen wrench to tight inside.

# STEP 5-18

**(Right Hand Assembly)**

**Install the Bumper Strip ⑧ and F-form waterproof strip ⑩ .**

The bumper strip ⑧ here needs to be cut shorter than the rail wall connector ③

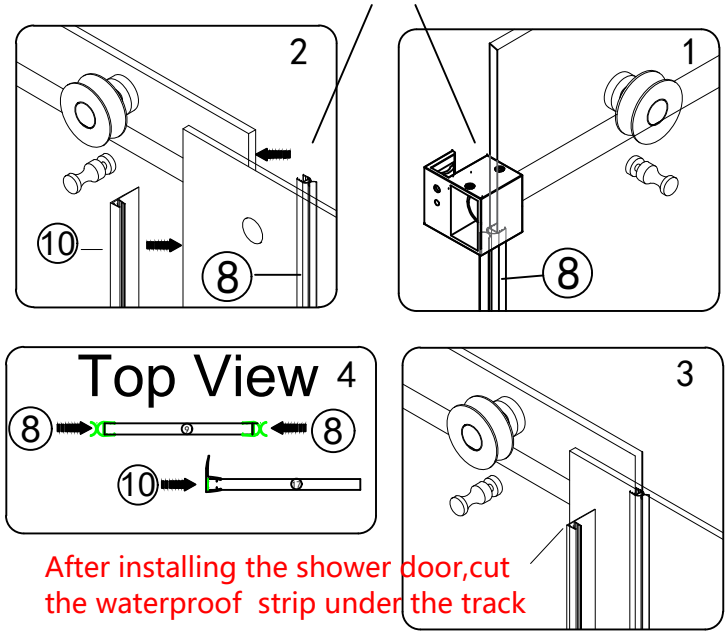


After installing the shower door,cut the waterproof strip under the track

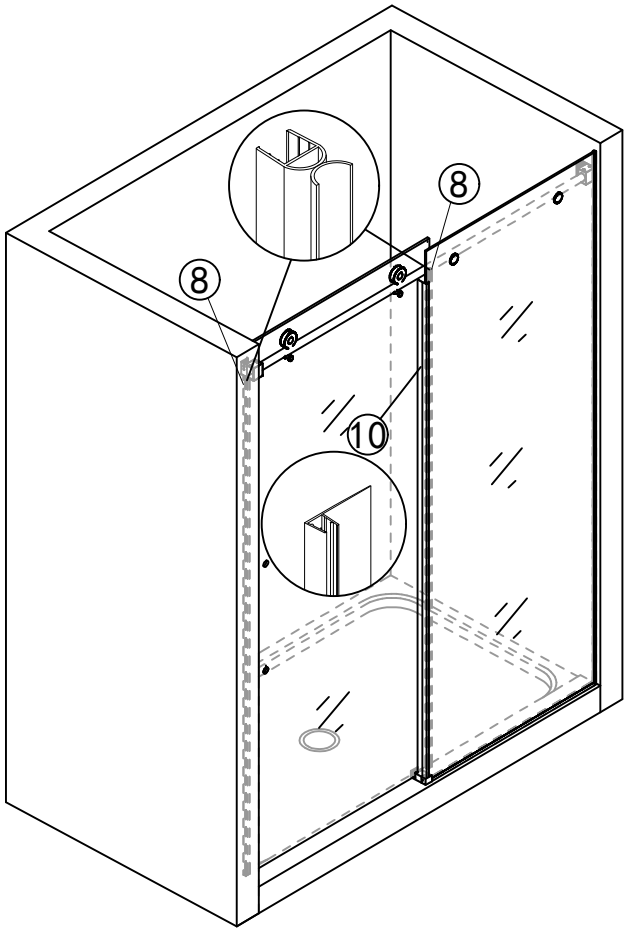

# STEP 5-19

**(Right Hand Assembly)**

**Install the Handle ⑪ .**

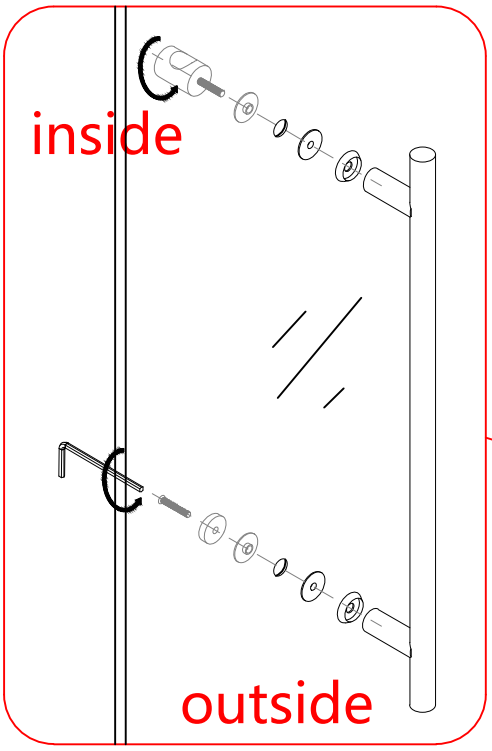


Use 2.5mm Allen key to tight.

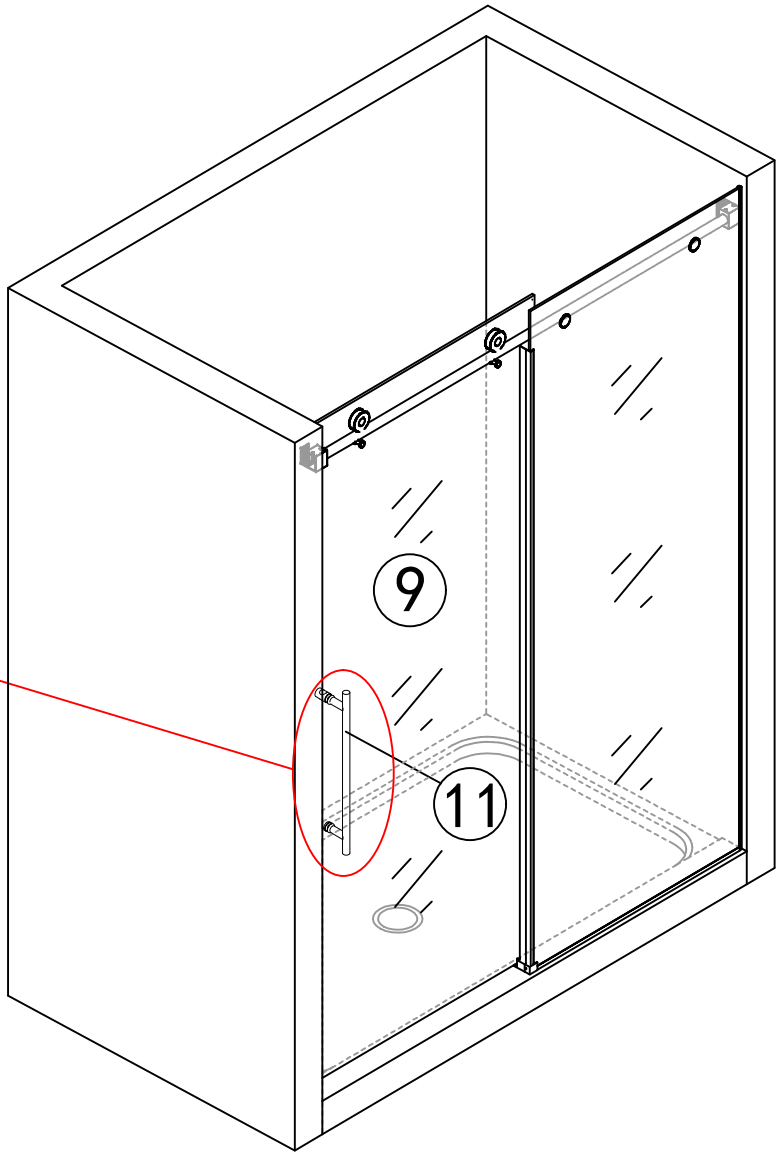

# STEP 5-20

**(Right Hand Assembly)**

**Install the base bar ⑫ .**

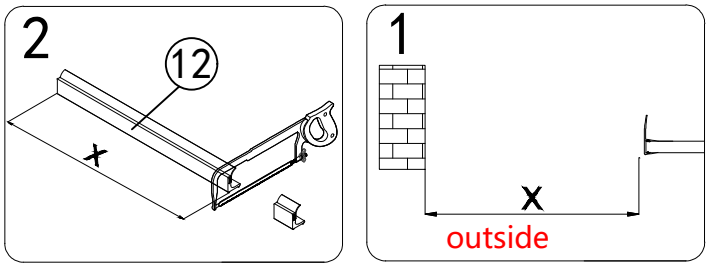





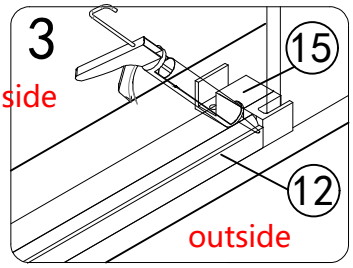


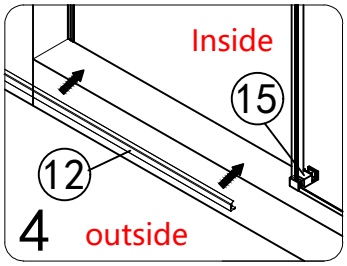


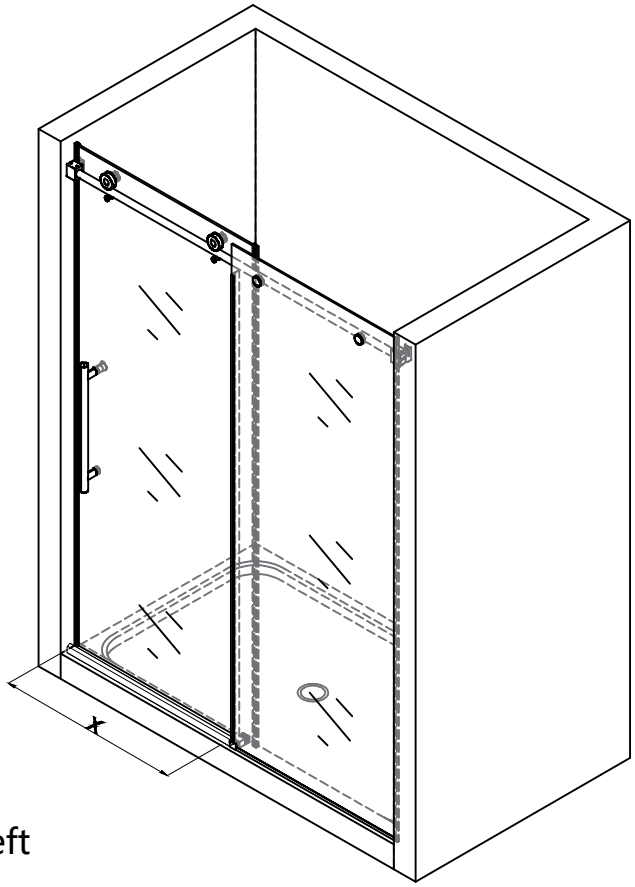


1. Measure "x" , "x" is the distance from the left side of the fixed panel ⑭ to the wall.
2. According to the vaule of the "x" to cut base bar ⑫
3. Place the base bar ⑫ parallel to the Sliding block ⑮ under the glass
4.Secure base bar ⑫ with glass gule.

# SEALING

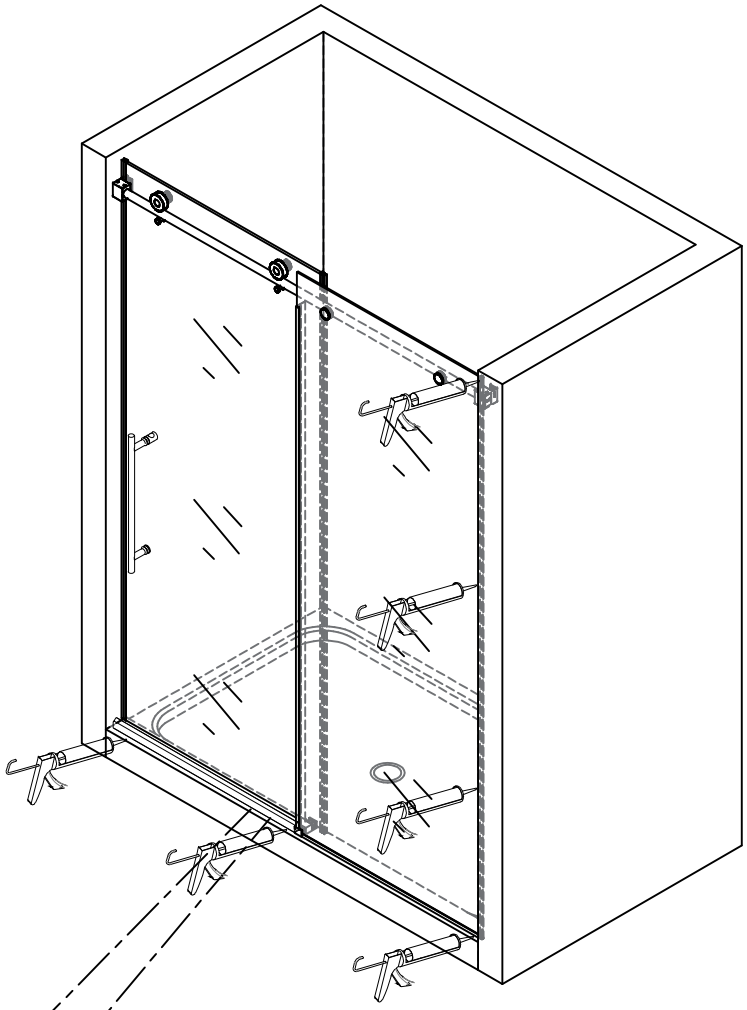

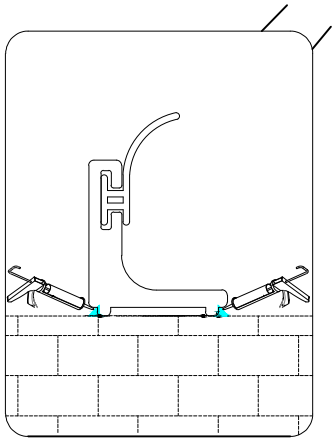

Apply glass glue on both sides of the bottom rail

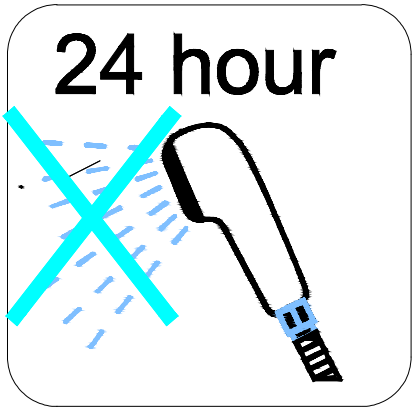


Wait for the glass glue to dry for 24 hours before using the shower door