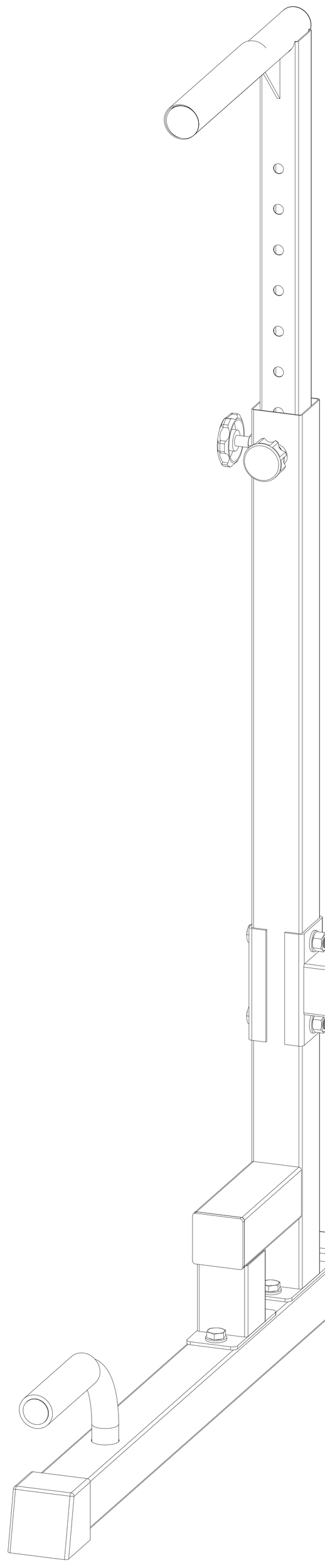

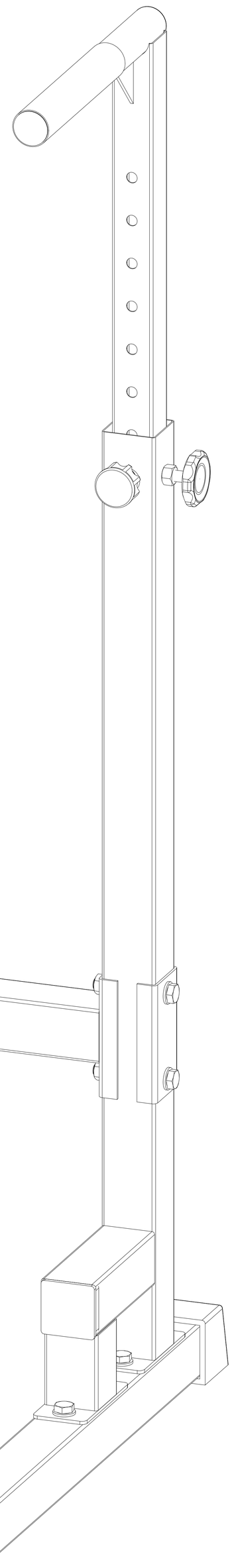

1 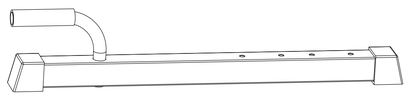 2pcs	2 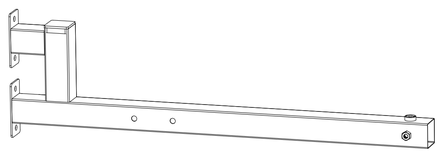 2pcs	3 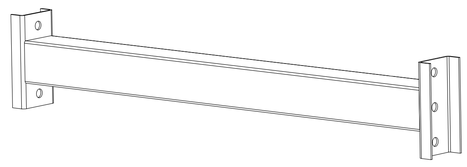 1pcs
4 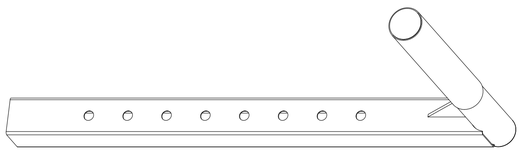 2pcs	5 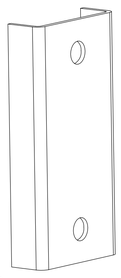 2pcs	6 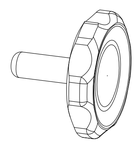 2pcs
7 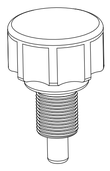 2pcs	8  M10*70 12pcs	9 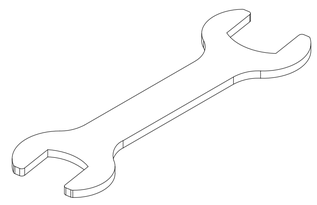 2pcs

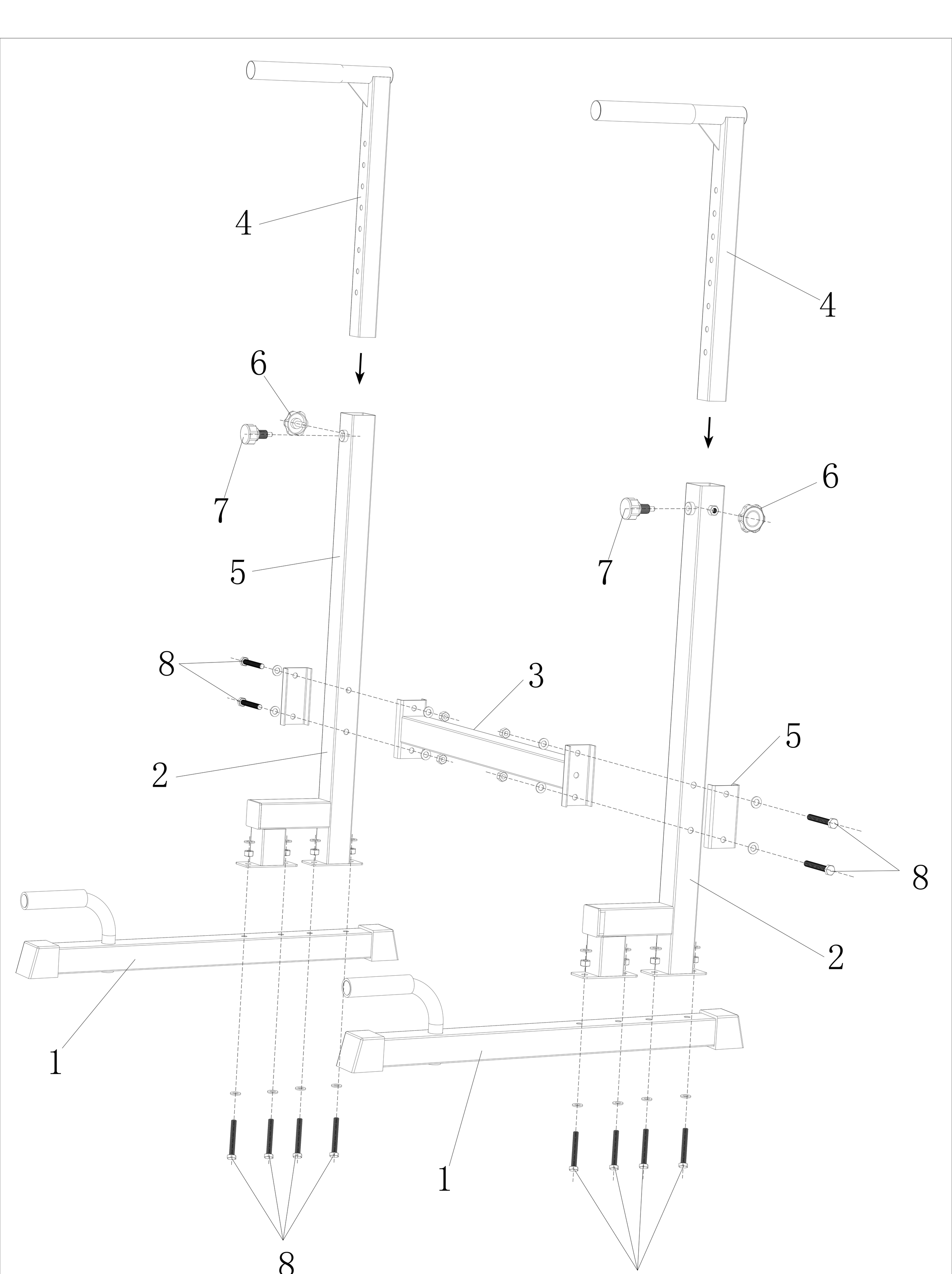
4
6
7
5
8
3
2
1
8
4
6
7
5
2
8
1
8

Step1

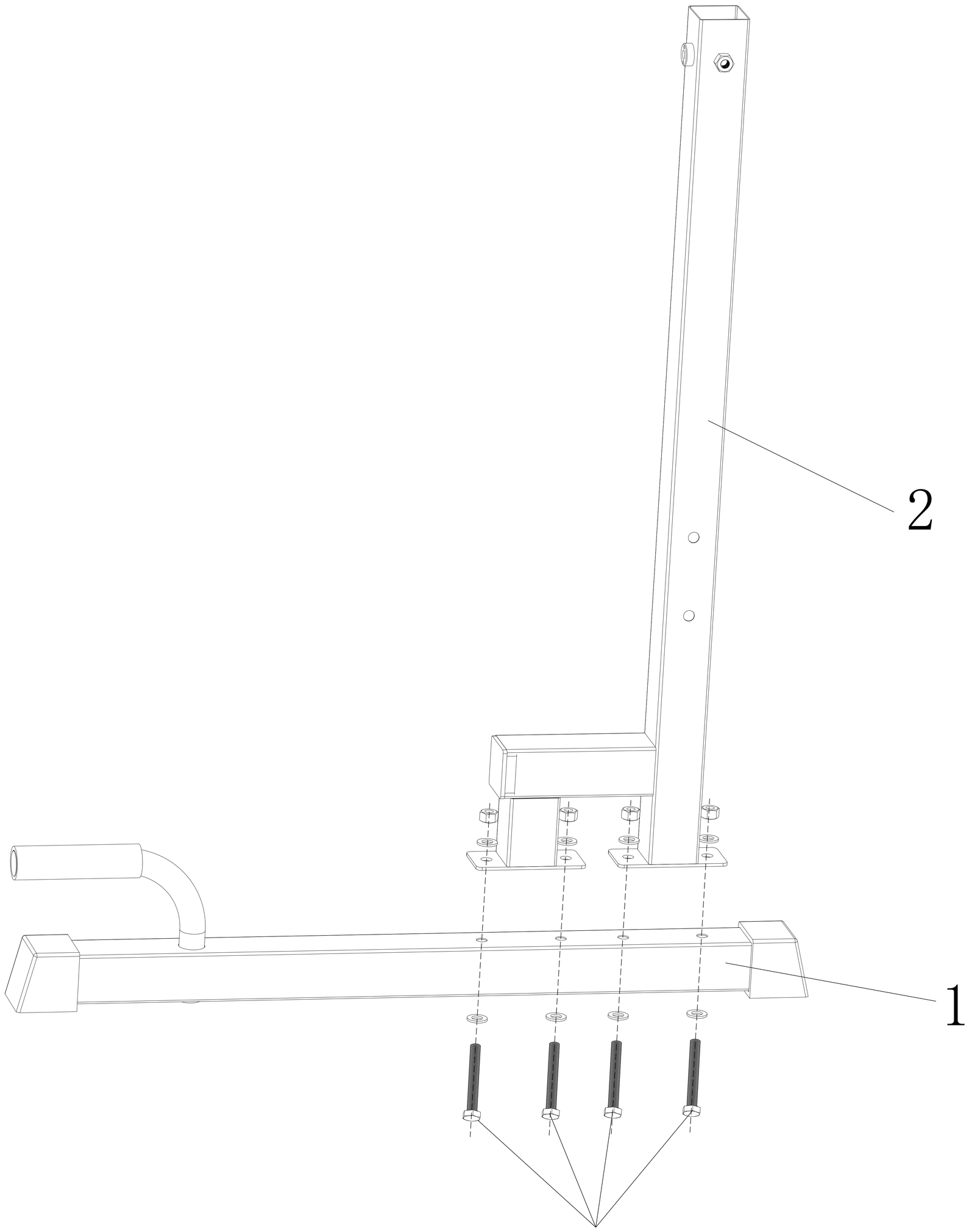

Step2

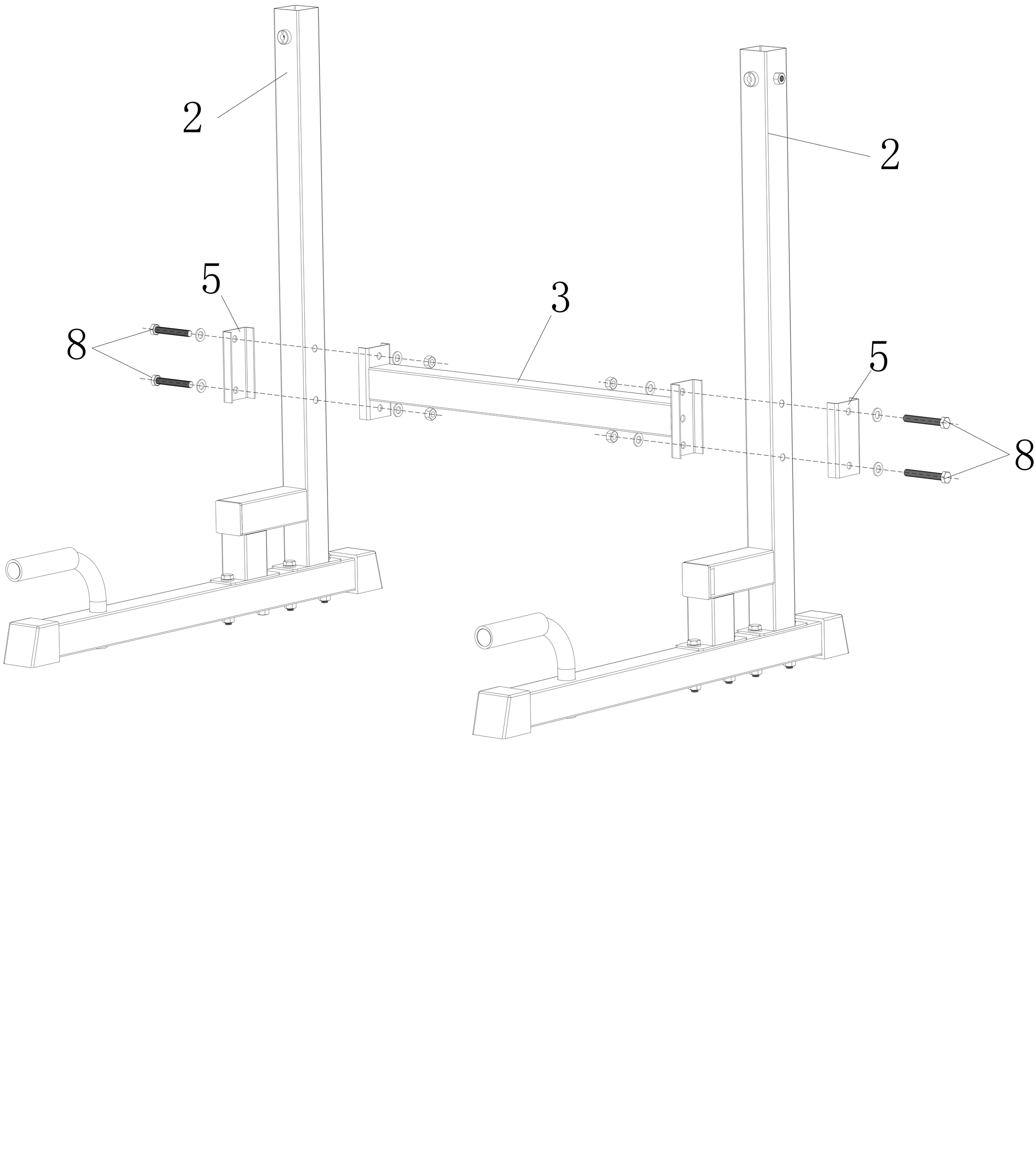

Step3

