SHRINE

USE AND CARE GUIDE

Model: ZS-TA-202401/ZS-TA-202402

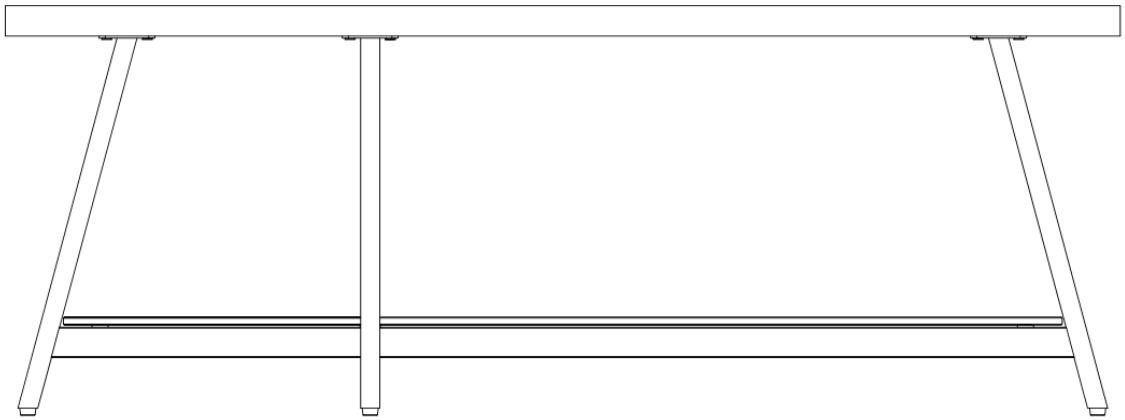

Customer Service:
Service@shrine-lighting.com

Ok, let's get rolling

This should be easy, just follow
our simple instructions and you will
be back to Netflix in no time!

Estimated time for assembly



What you need:

- Some of your favorite bubbly or your preferred relaxant.
- Use the packaging carton as a working surface to prevent product damage during assembly.
- Phillips head screwdriver (not included).

What's included

A. Wood Top x 1

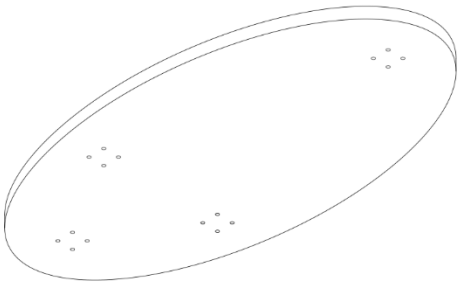

B. Short Base Frame x 1

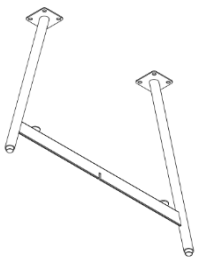

C. Long Base Frame x 1

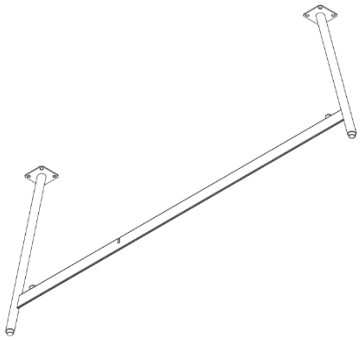

D. Circular Glass Base x 1

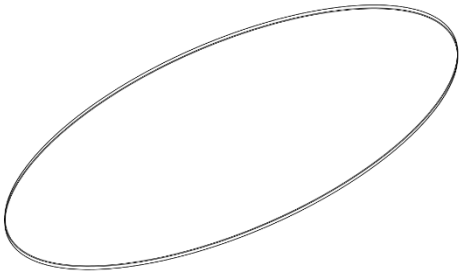

E x 4



F x 16

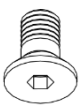

G x 1



H x 2



IMPORTANT:

1. Do not tighten bolts / screws completely until all bolts / screws are lined up and inserted into holes.
2. Do not over tighten screws and bolts to avoid stripping.
3. Please use hand tools to assemble this product. Do not use power tools.

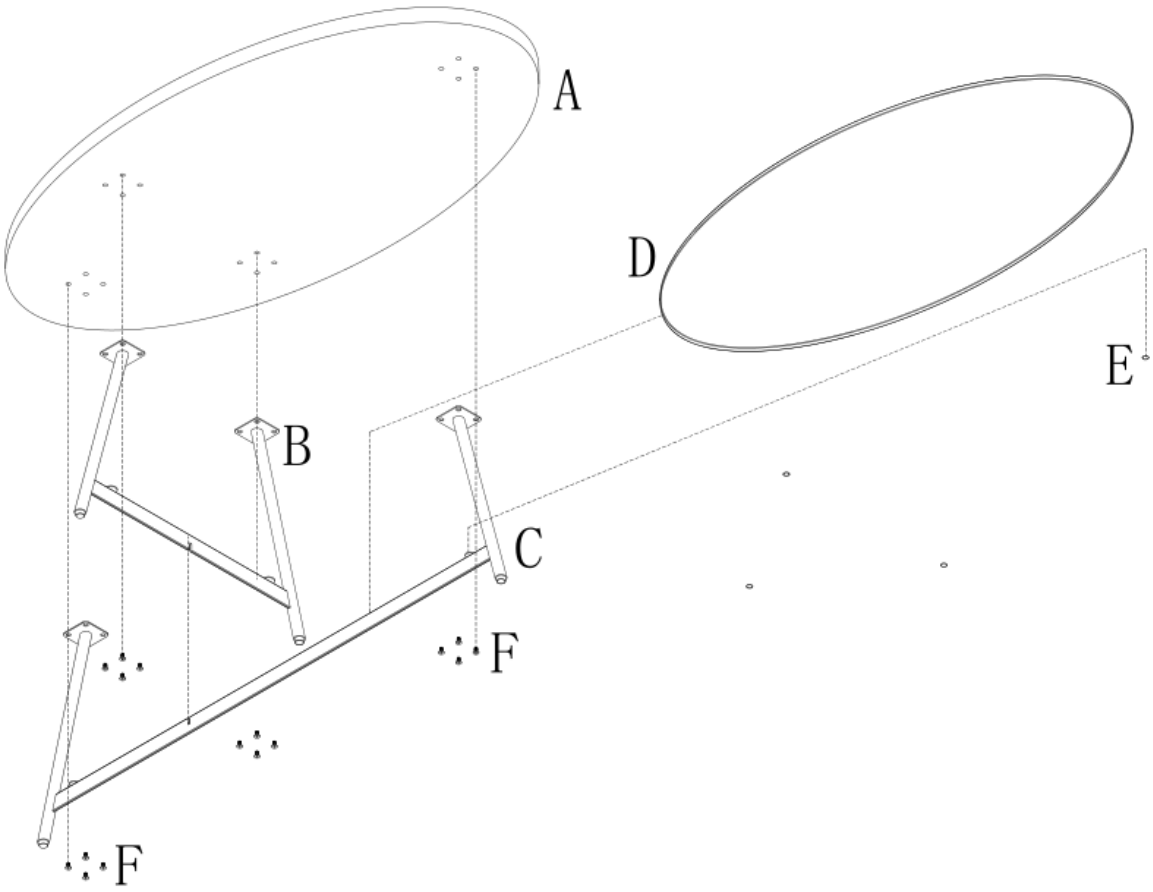

Step 1

Using wrench G, align screw F with each of the four holes on the wooden board, then secure frame B to the round wooden board A.

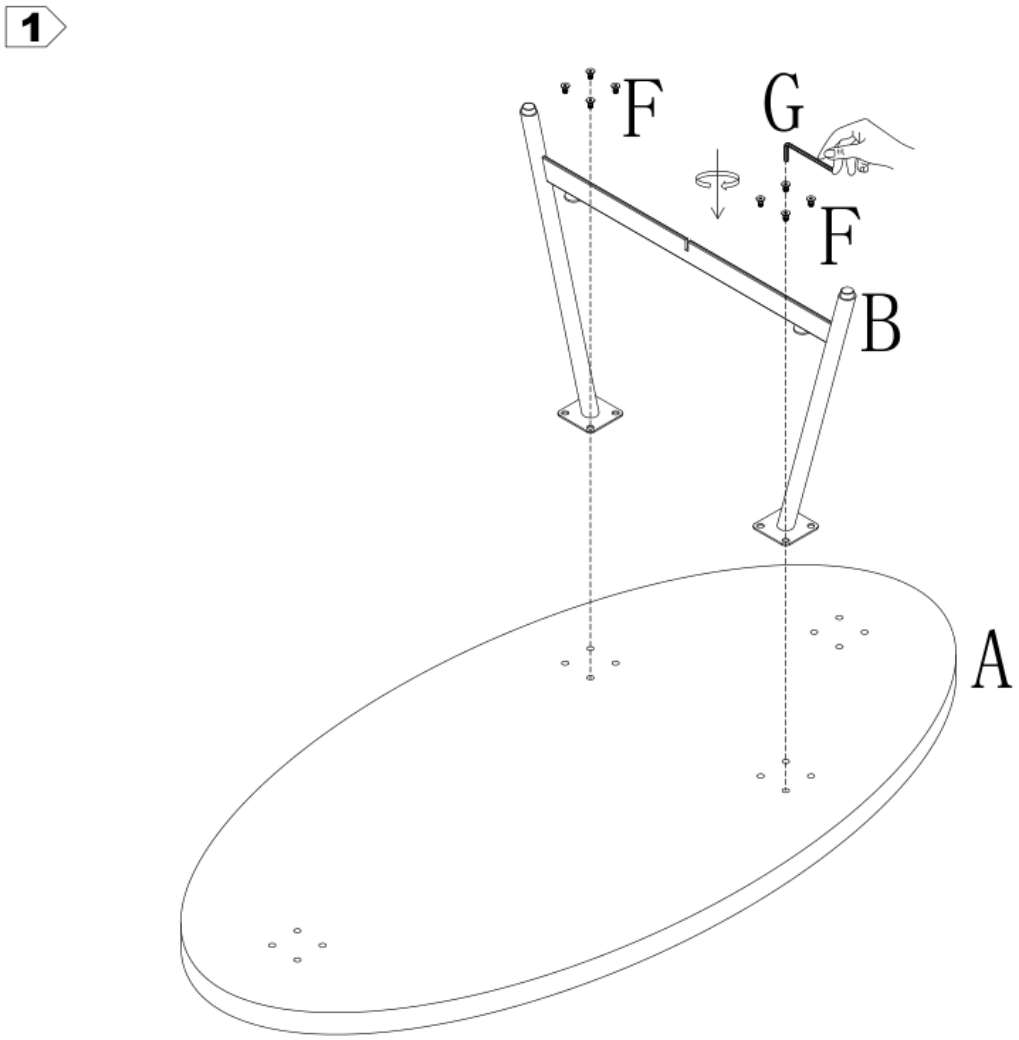

Step 2

Using wrench G, align screw F with each of the four holes on the wooden board, then secure frame C to both the round wooden board A and frame B.

2

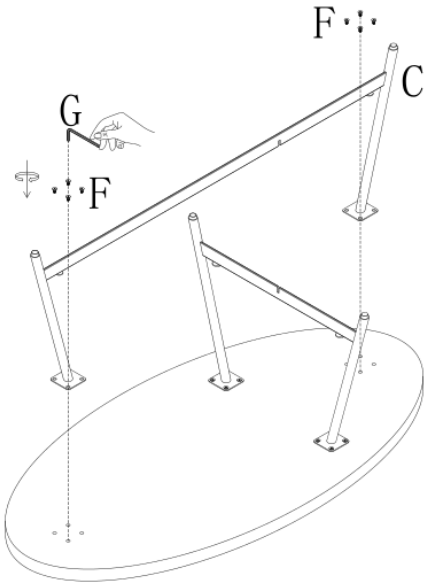

Step 3

Secure the spacer E to the corners of frame B and C to fix the oval glass base D in place.

3

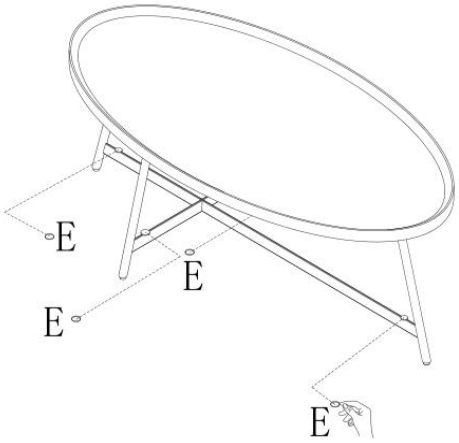

Step 4

Place the glass base D onto frames B and C, aligning all four corners securely. Now you'll have a perfect oval coffee table!

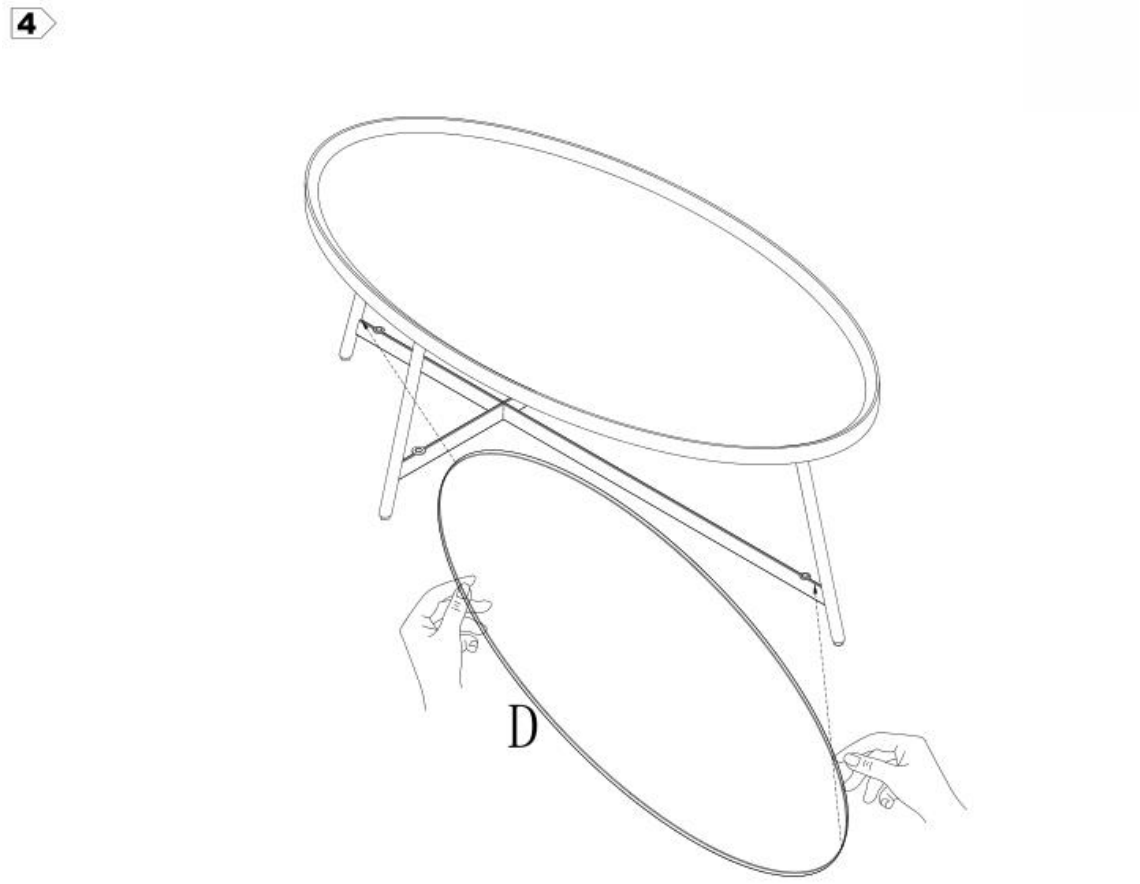

Safety first!

Fun later!

We want your coffee table to last as long as possible,
so, we recommend that you tighten the screws 2 weeks after assembly
and for added safety check the tightness of all screws every 2 months.

Safe use of this product starts with you.

Use this coffee table responsibly with the primary concern for your safety.
Follow assembly instructions carefully and inspect product upon receipt
and each use.
We cannot be held legally responsible for any injuries or death resulted
from failure to follow instructions or improper use of this product.

Do not modify the structure of this product in any way.

Our products have been tested to meet specific safety measures as they
were originally intended to be sold. Any modifications will present the risk
of creating significant safety issues which we will not be responsible for.

Please

DO NOT	**use for commercial purpose**
DO NOT	**place on uneven floor or surface**
DO NOT	**stand on table top**
DO NOT	**put hot liquid directly on the table top**
DO NOT	**leave spilled liquid on the table top**
DO NOT	**use if table is damaged or broken**
DO NOT	**make temporary repairs**
DO NOT	**use outdoors**