PREMIER
COPPER PRODUCTS

MODEL NUMBER: SH-L200DB

* Description: Hand Hammered Copper 8.5" Dome Pendant Light Shade
* Copper Shade Only
* Canopy Kit NOT Included
* Pendant Type: Down Lighting
* Outer Dimension: 8.5" x 3.5"
* Socket Hole Dimension: 1.25"
* Finish: Oil Rubbed Bronze
* Rim: Copper Wrapped Wire
* Material Gauge: 18

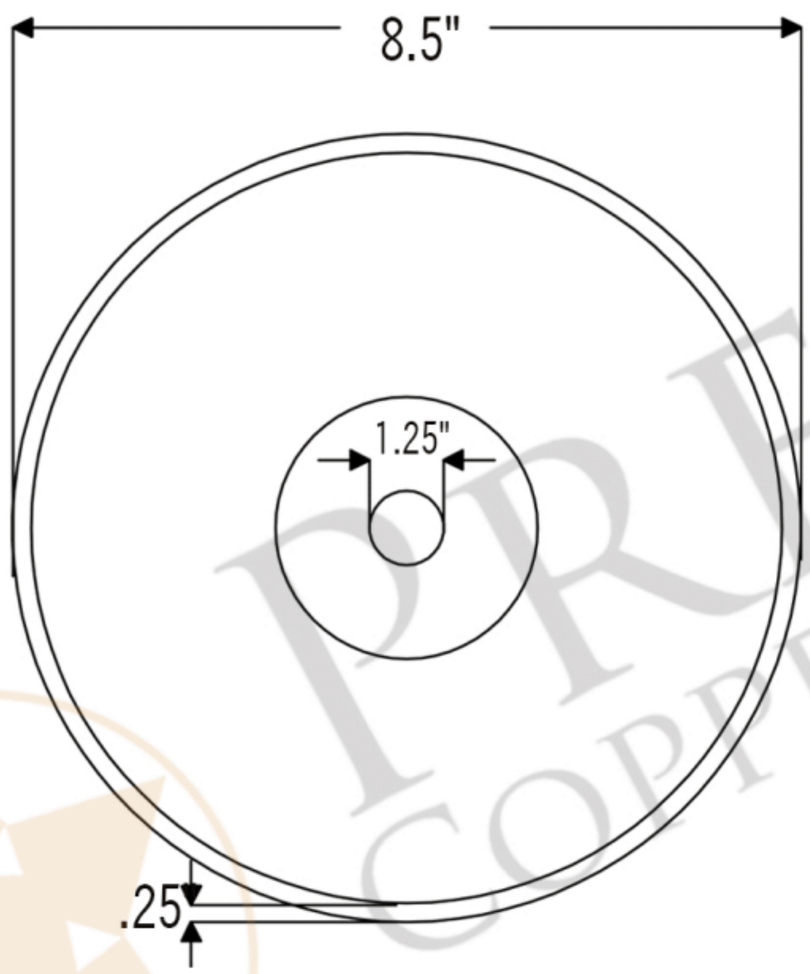

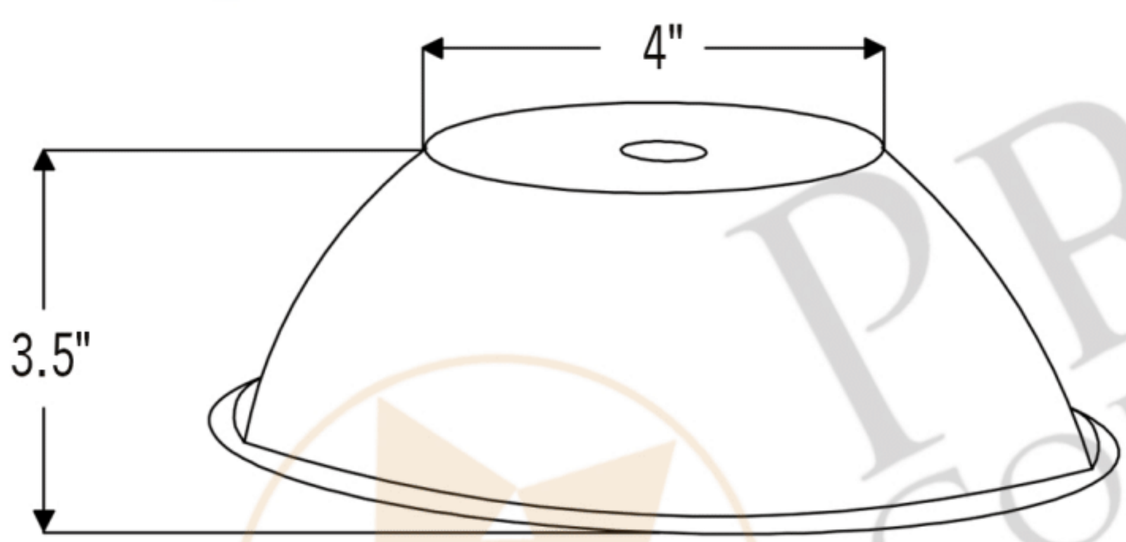

THIS PRODUCT IS HAND CRAFTED, SMALL VARIANCES IN COLOR AND SIZE MAY OCCUR.
DO NOT MAKE ANY INSTALLATION CUTS UNTIL YOU RECEIVE YOUR ITEM(S).