ASSEMBLY INSTRUCTION

DINING SET

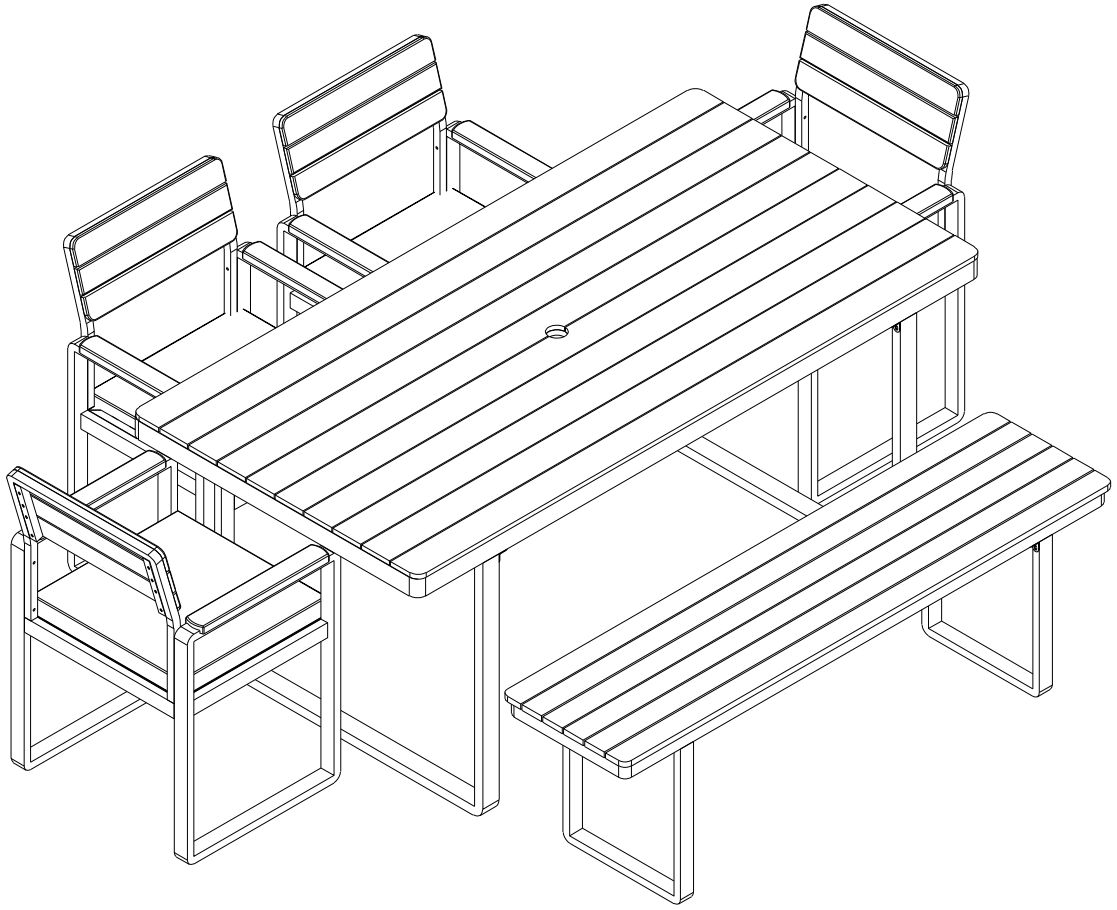

Notice:

1. **50% Tighten before fixing all screws, Allen wrench is recommended instead of an electric drill.**
2. **Place the item on a flat ground to adjust and make sure it remains stable.**
3. **Tighten up all screws with tools gradually.**
4. **If the screws are not aligned with holes during assembly, please loosen all the other screws to 50% and continue the assembly process.**
5. **If the item is not stable, please loosen all the screws, adjust it on a flat ground and tighten up all screws again.**
6. **Note : If one or some screws are fully tightened during assembly, chances are the others will not be aligned with holes. In addition, all the holes are designed to be relatively larger to provide more space for the adjustment of the screws.**

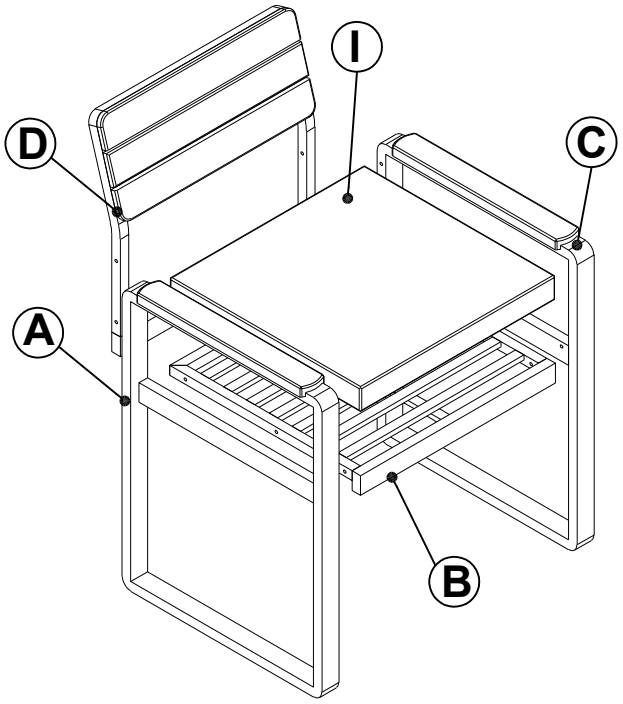

x4

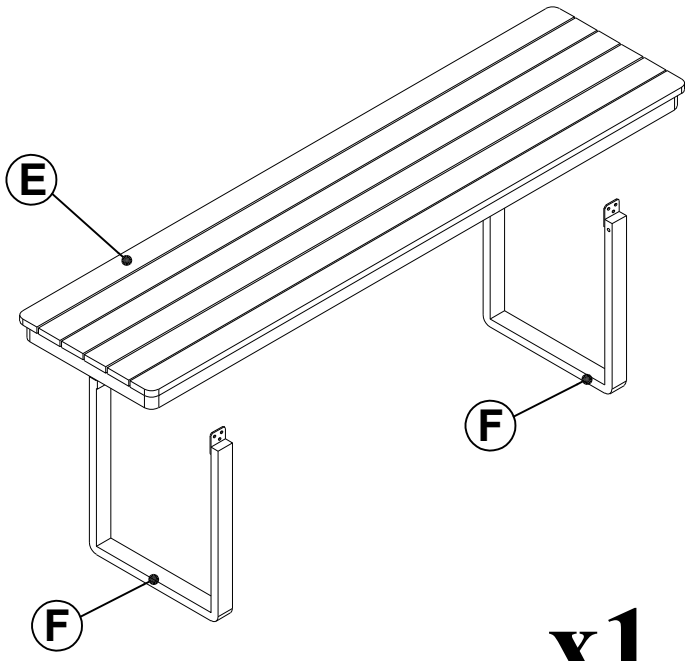

x1

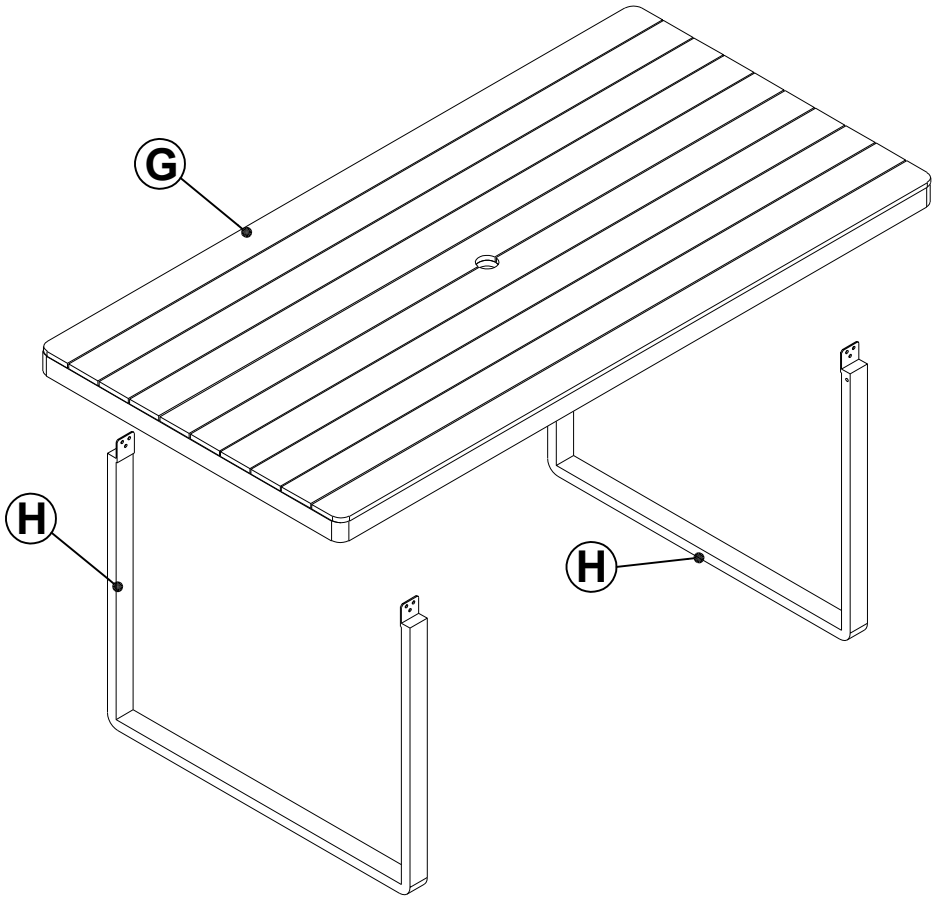

x1

A 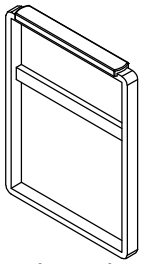 **Left Leg (4 pcs)**	B 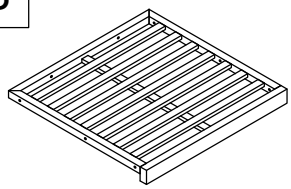 **Seat Chair Frame (4 pcs)**	C 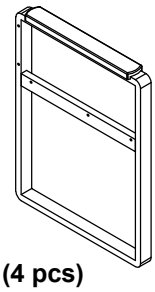 **Right Leg (4 pcs)**	D 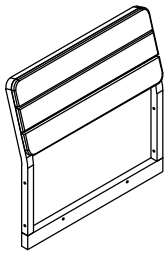 **Back Chair Frame (4 pcs)**
E 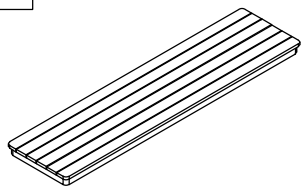 **Stool (1 pc)**	F 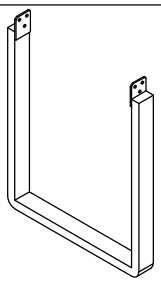 **Stool Leg (2 pcs)**	G 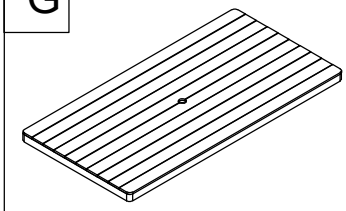 **Table Top (1 pc)**	H 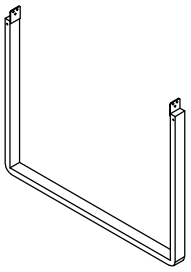 **Table Leg (2 pcs)**
I 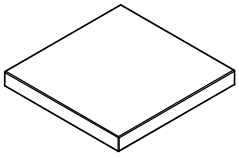 **Seat Cushion (4 pcs)**			

1 x 40 pcs 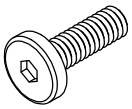 Extra 2 pcs BOLT M6 x 20MM	**2** x 48 pcs 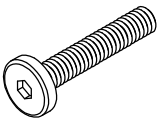 Extra 2 pcs BOLT M6 x 35MM	**3** x 88 pcs 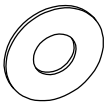 Extra 3 pcs Washer M6	**4** x 8 pcs 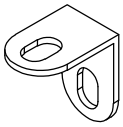 L Bracket
5 x 2 pcs  Allen Wrench			

CARTON CONTENT:

E x1

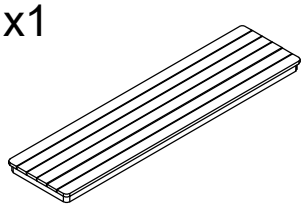

F x2

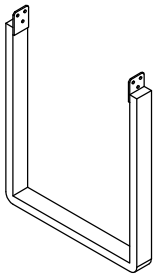

G x1

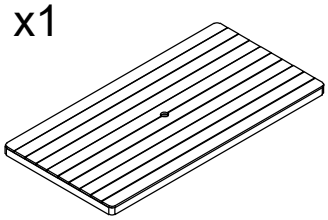

H x 2

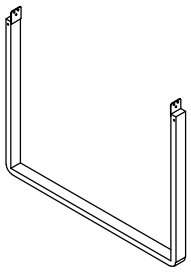

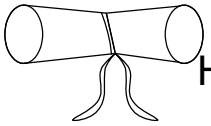

Hardware

Ax4

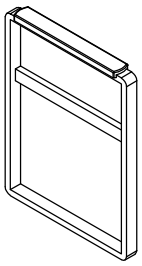

Bx4

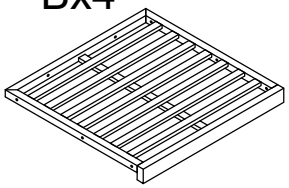

Cx4

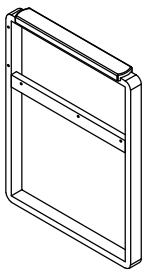

Dx4

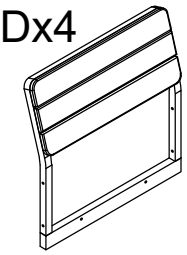

I x4

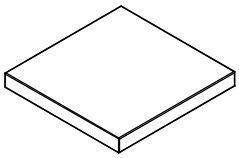

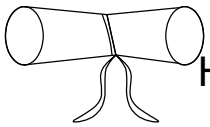

Hardware

HARDWARE CONTENT

1 x 40 pcs  Extra 2 pcs BOLT M6 x 20MM	**3** x 40 pcs 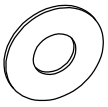 Extra 2 pcs Washer M6	**4** x 8 pcs 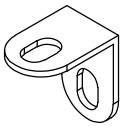 L Bracket	**5** x 1 pc  Allen Wrench
2 x 48 pcs 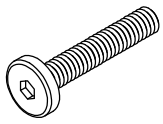 Extra 2 pcs BOLT M6 x 35MM	**3** x 48 pcs 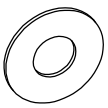 Extra 2 pcs Washer M6	**5** x 1 pc  Allen Wrench	

STEP 1

B	x1
D	x1
②	x2
③	x2

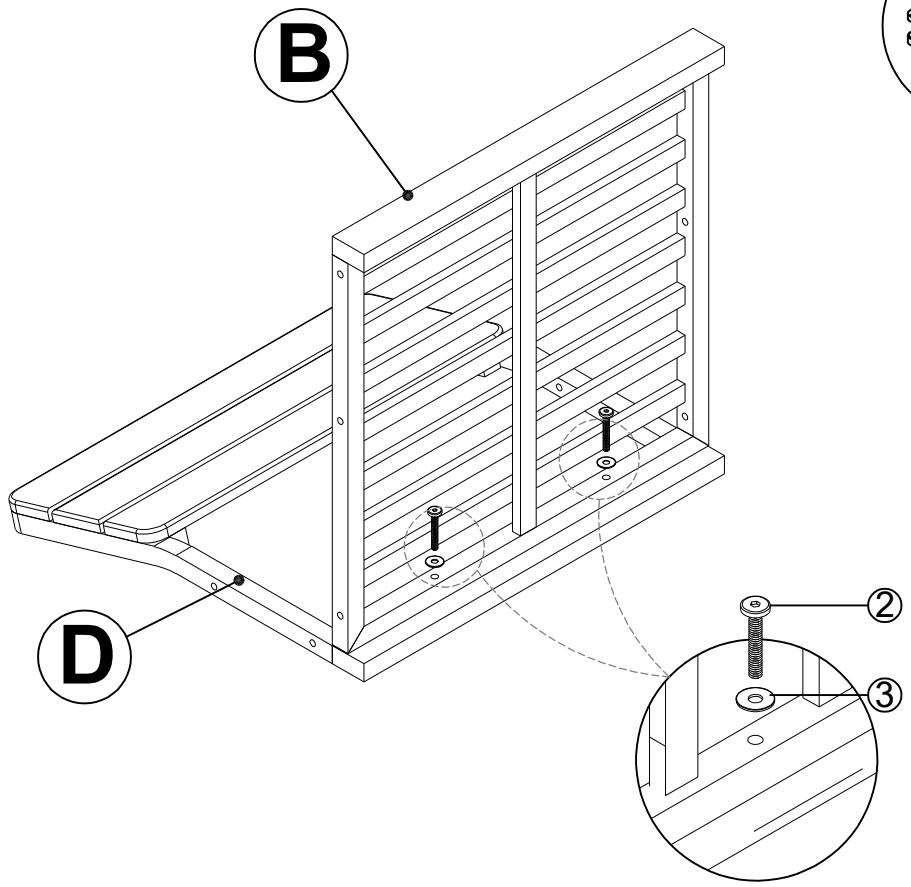

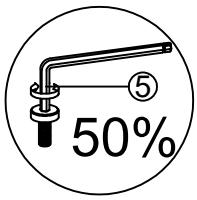

x4

Connect Seat Chair Frame (B) & Back Chair Frame (D), Tighten Bolt (2) & Washer (3) with Allen Wrench (5).

STEP 2

C	x1
②	x3
③	x3

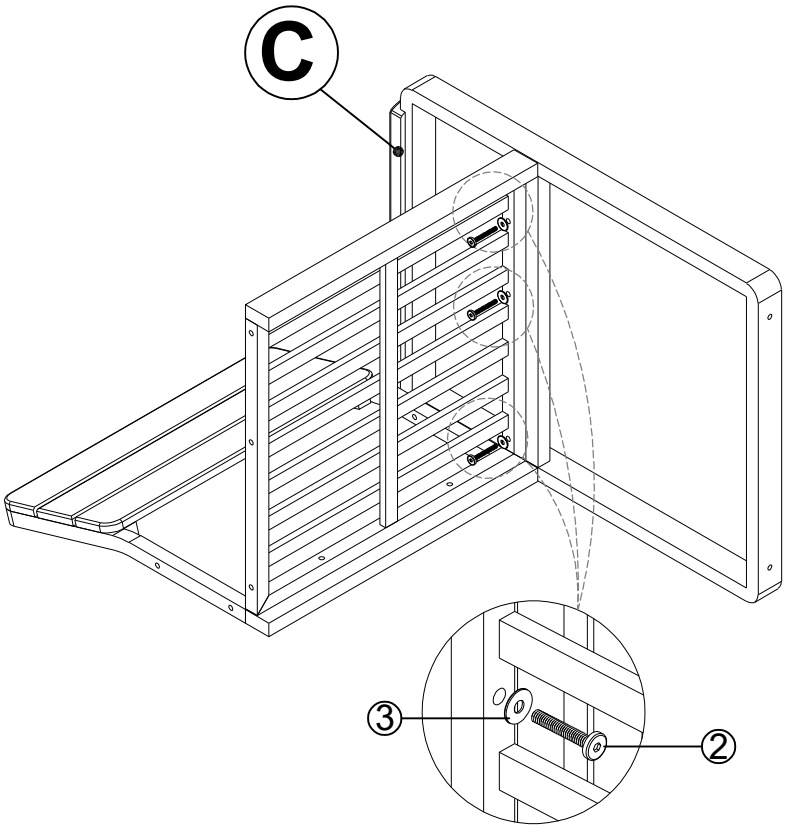

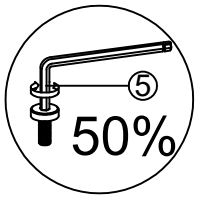

x4

Connect the part from step 1 & Right Leg (C), Tighten Bolt (2) & Washer (3) with Allen Wrench (5).

STEP 3

A	x1
②	x3
③	x3

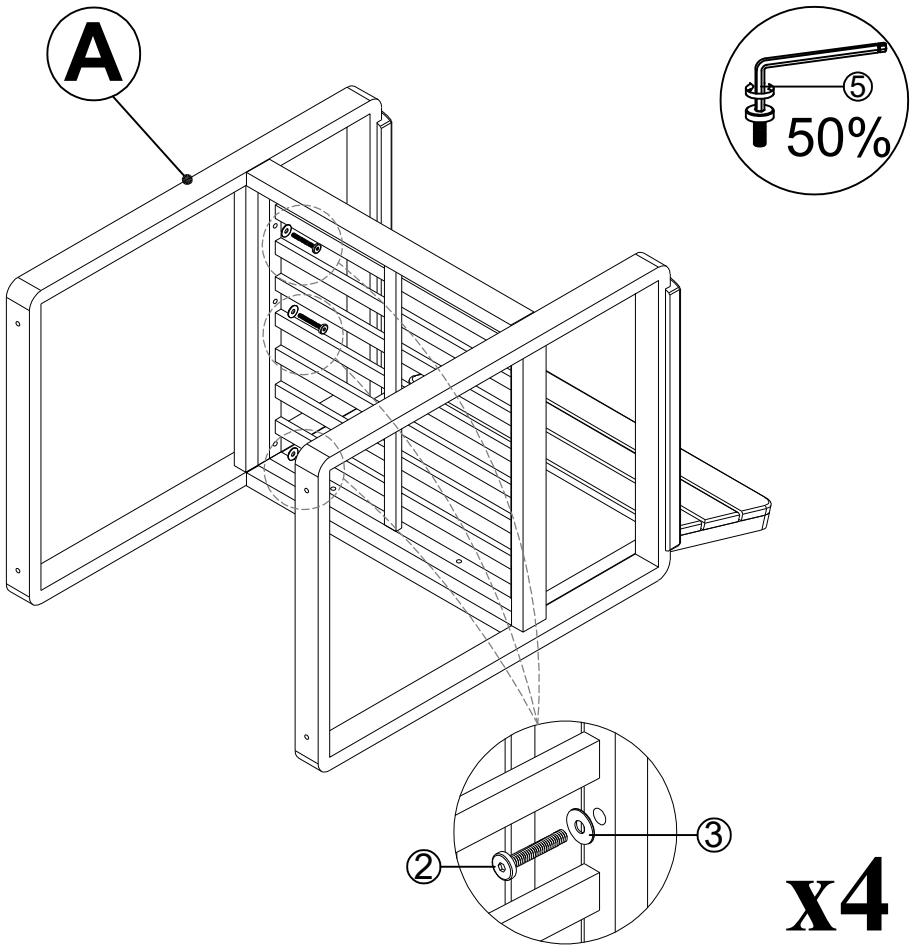

Connect the part from step 2 & Left Leg (A), Tighten Bolt (2) & Washer (3) with Allen Wrench (5).

STEP 4

②	x4
③	x4

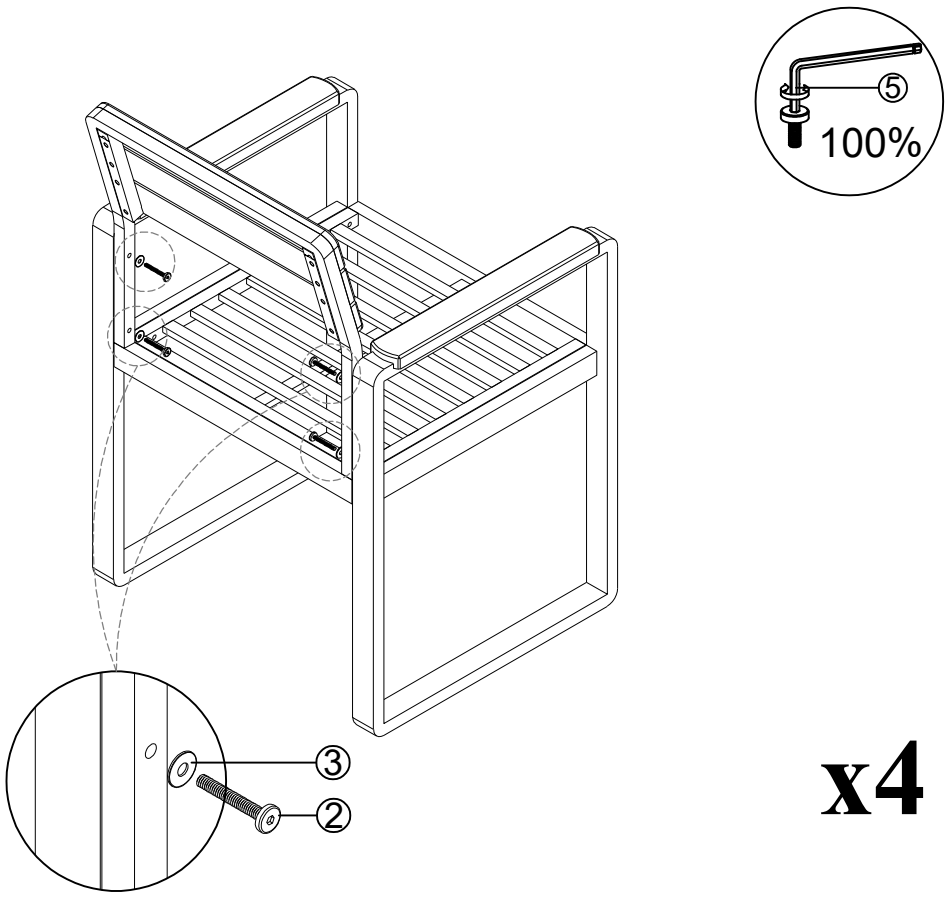

Connect the part from step 3 Tighten Bolt (2) & Washer (3) with Allen Wrench (5).

STEP 5

I	x1

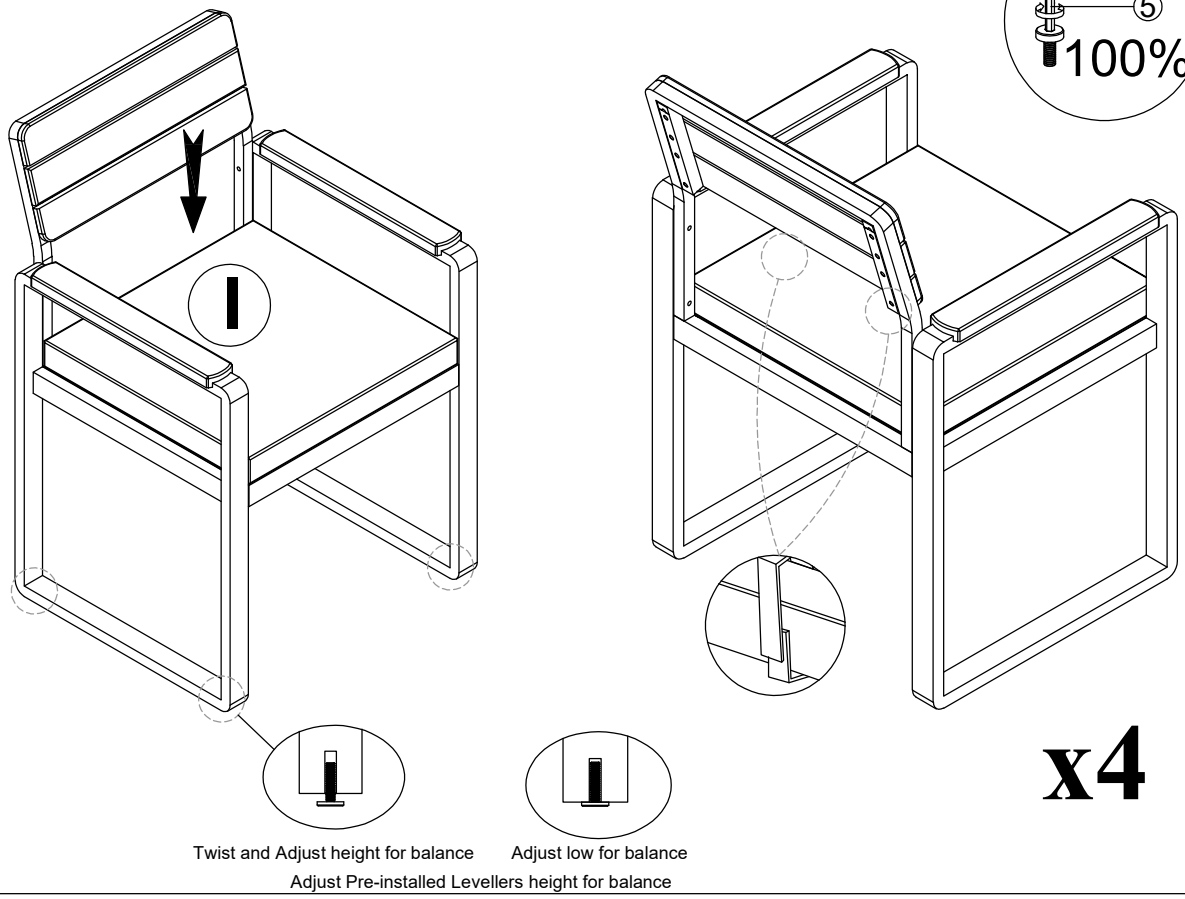

Open all the bags, adjust the cushions & set up the Seat Cushion (I).

STEP 6

E	x1
F	x2
①	x12
③	x12

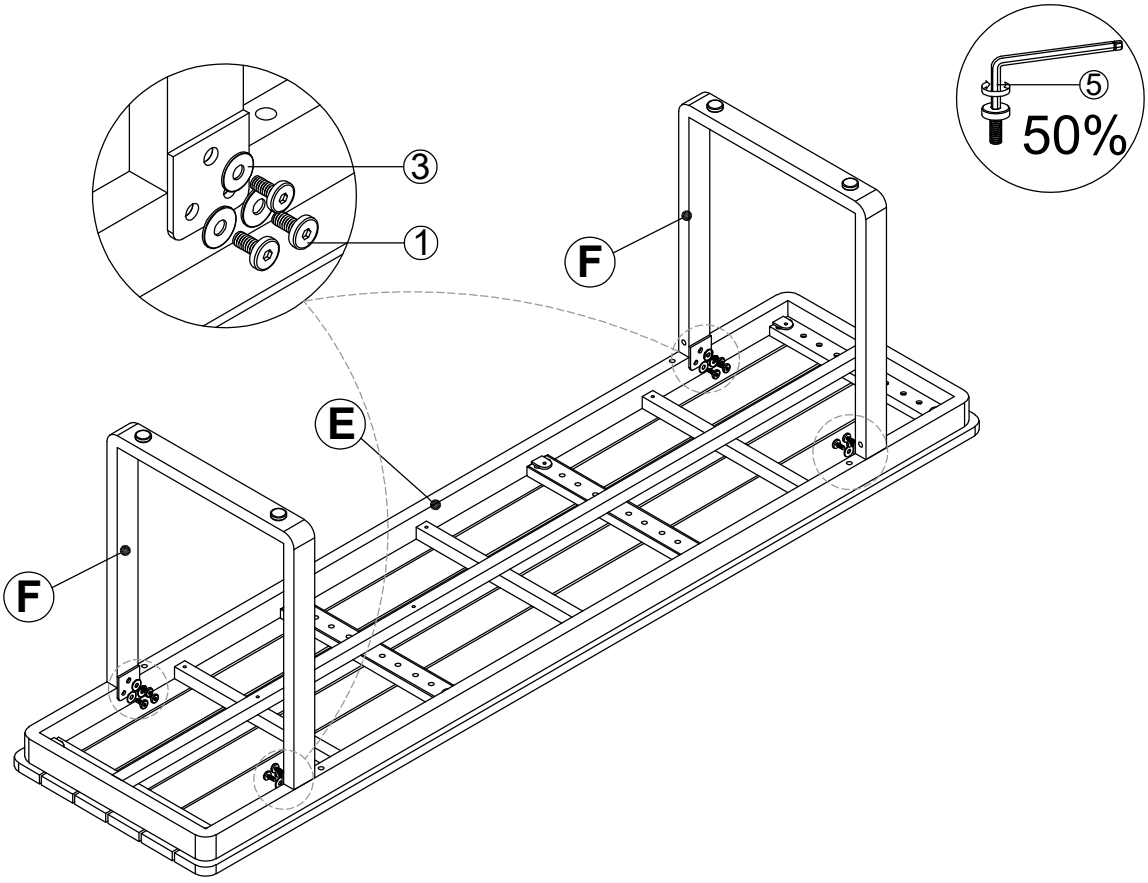

Connect Stool (E) & Stool Leg (F), Tighten Bolt (1) & Washer (3) with Allen Wrench (5).

STEP 7

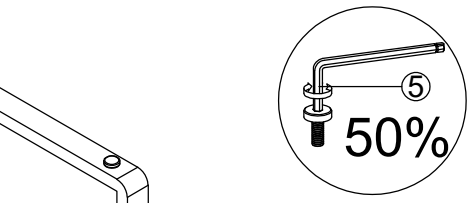

①	x8
③	x8
④	x4

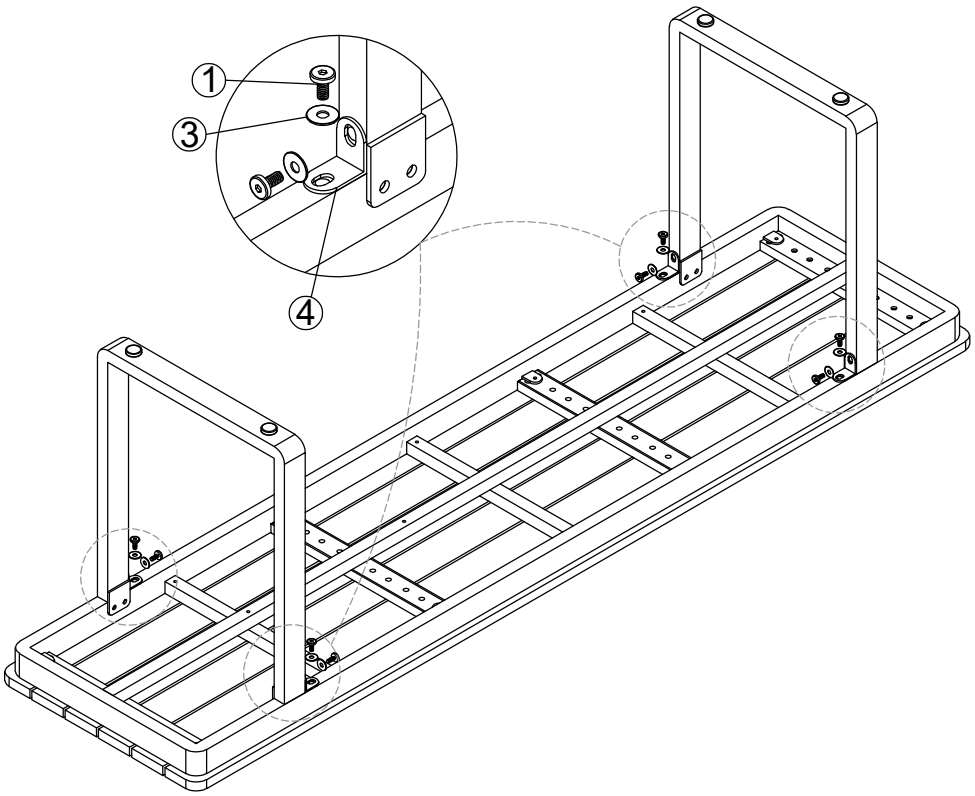

Connect the part from step 6 & L Bracket (4) with Tighten Bolt (1) & Washer (3) with Allen Wrench (5).

STEP 8

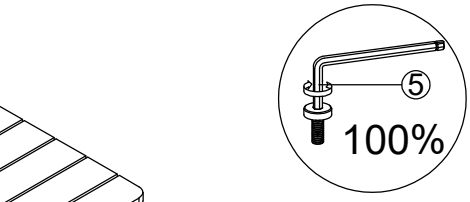

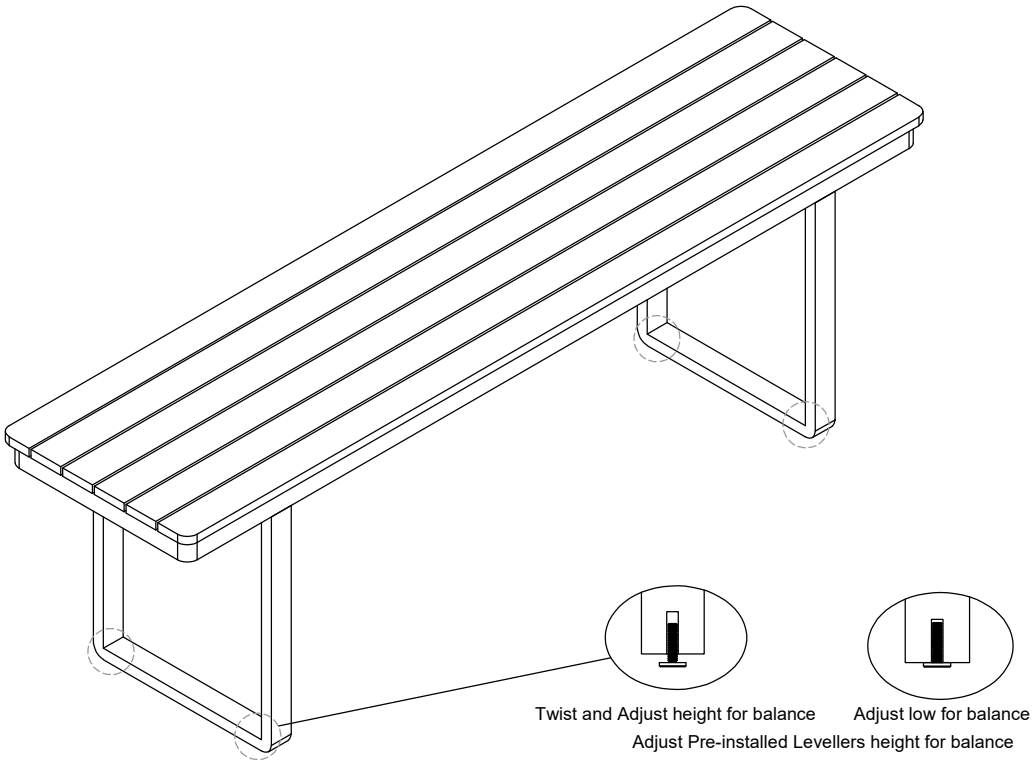

Finish Stool.

STEP 9

G	x1
H	x2
①	x12
③	x12

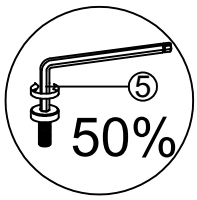

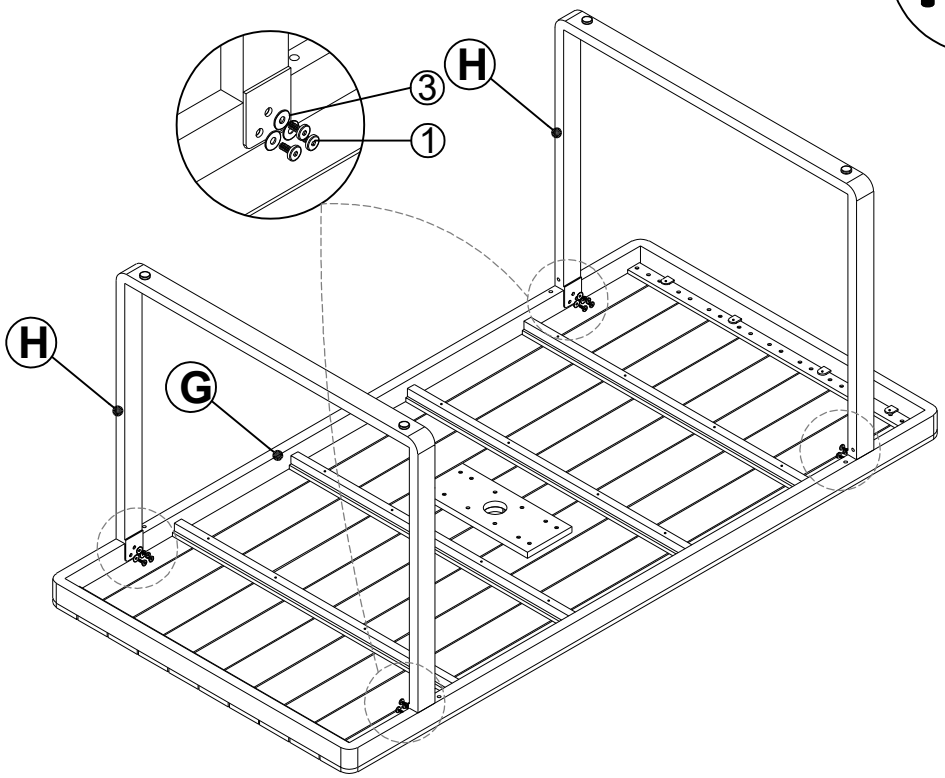

Connect Table Top (G) & Table Leg (H), Tighten Bolt (1) & Washer (3) with Allen Wrench (5).

STEP 10

①	x8
③	x8
④	x4

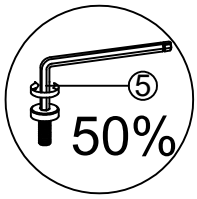

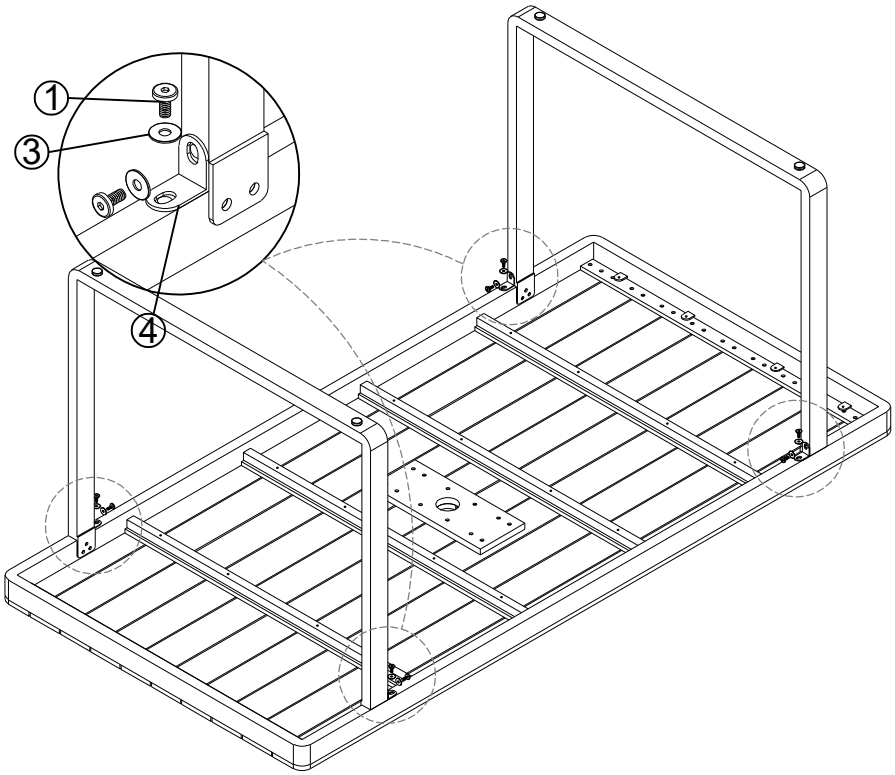

Connect the part from step 9 & L Bracket (4) with Tighten Bolt (1) & Washer (3) with Allen Wrench (5).

STEP 11

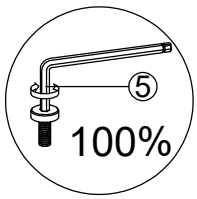

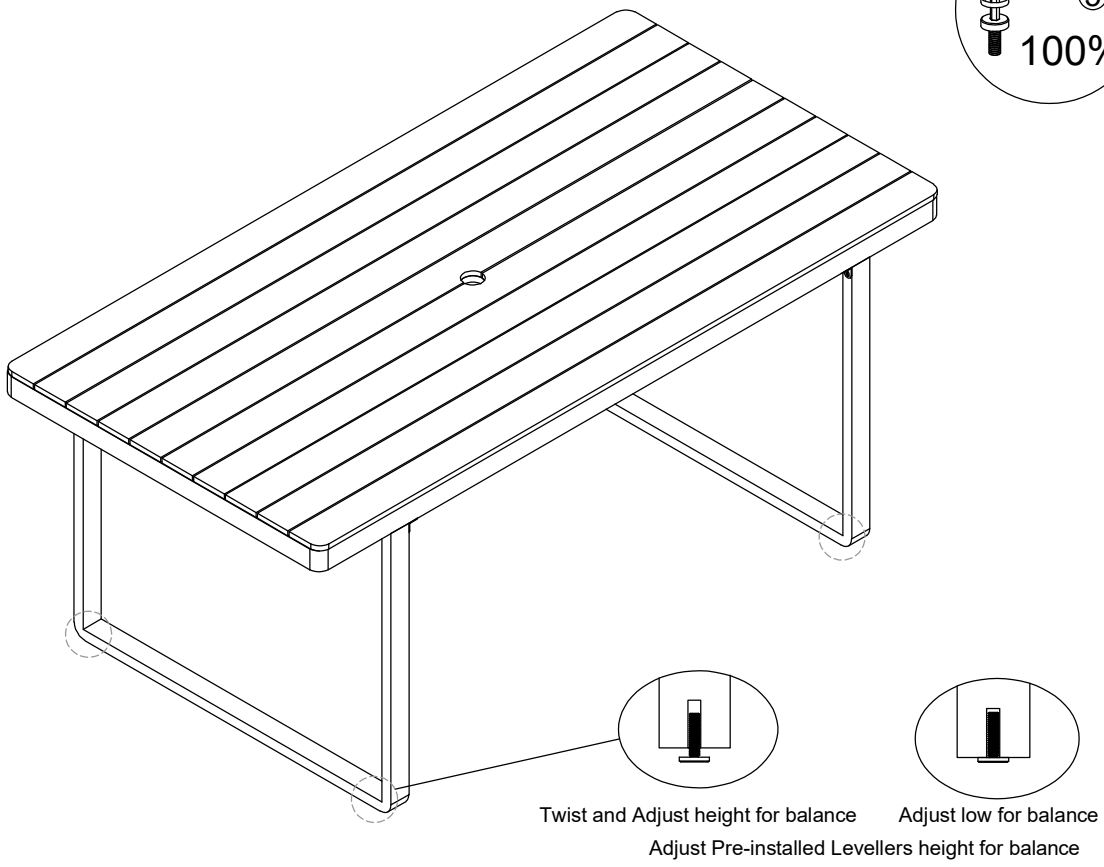

Finish Table.

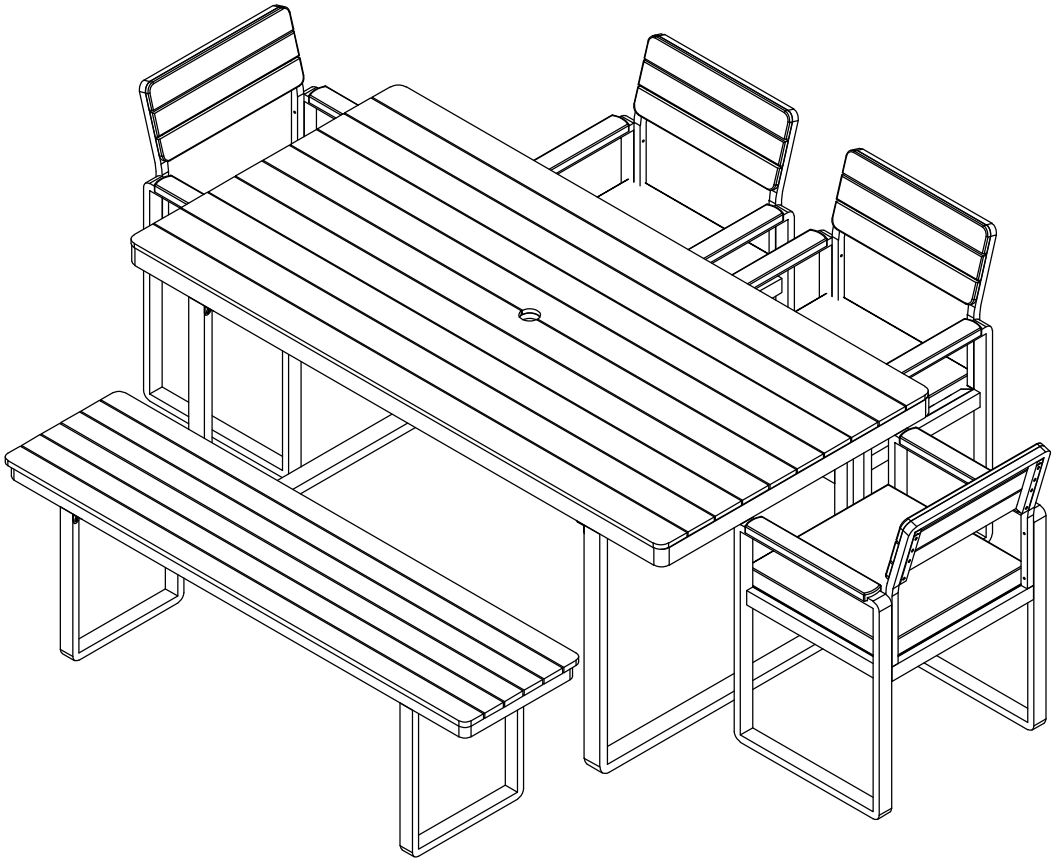

Finish.