Assembly instructions

SG065

80 CM BOOKCASE

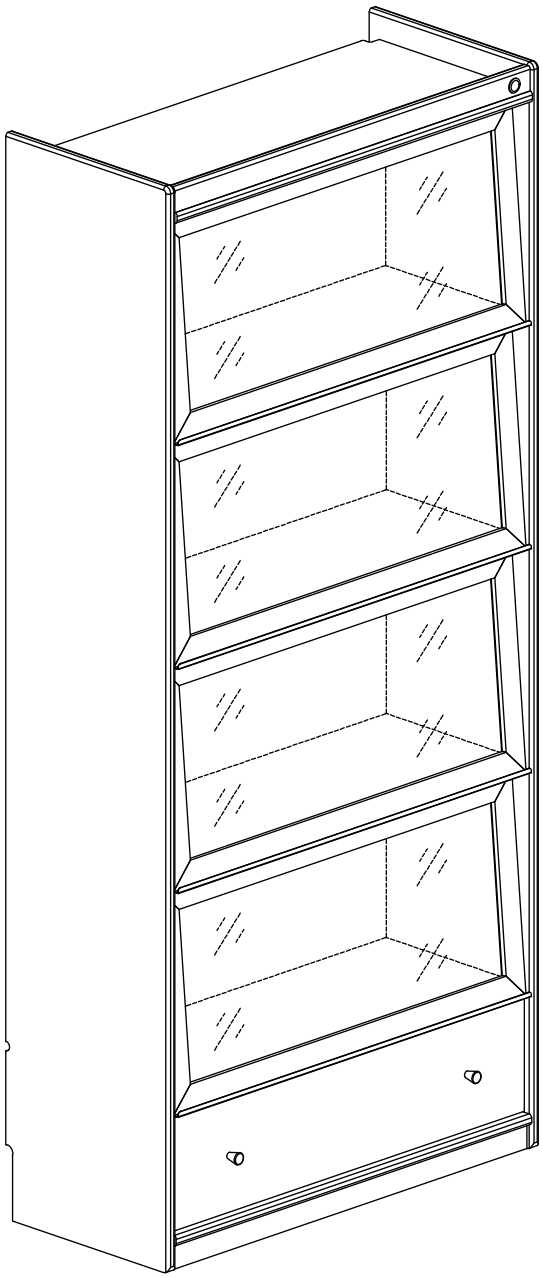

Read through these instructions before assembly.
Keep this manual for future reference.

Assembly overview

Match the numbered parts to the parts lists on pages 3 and 4.

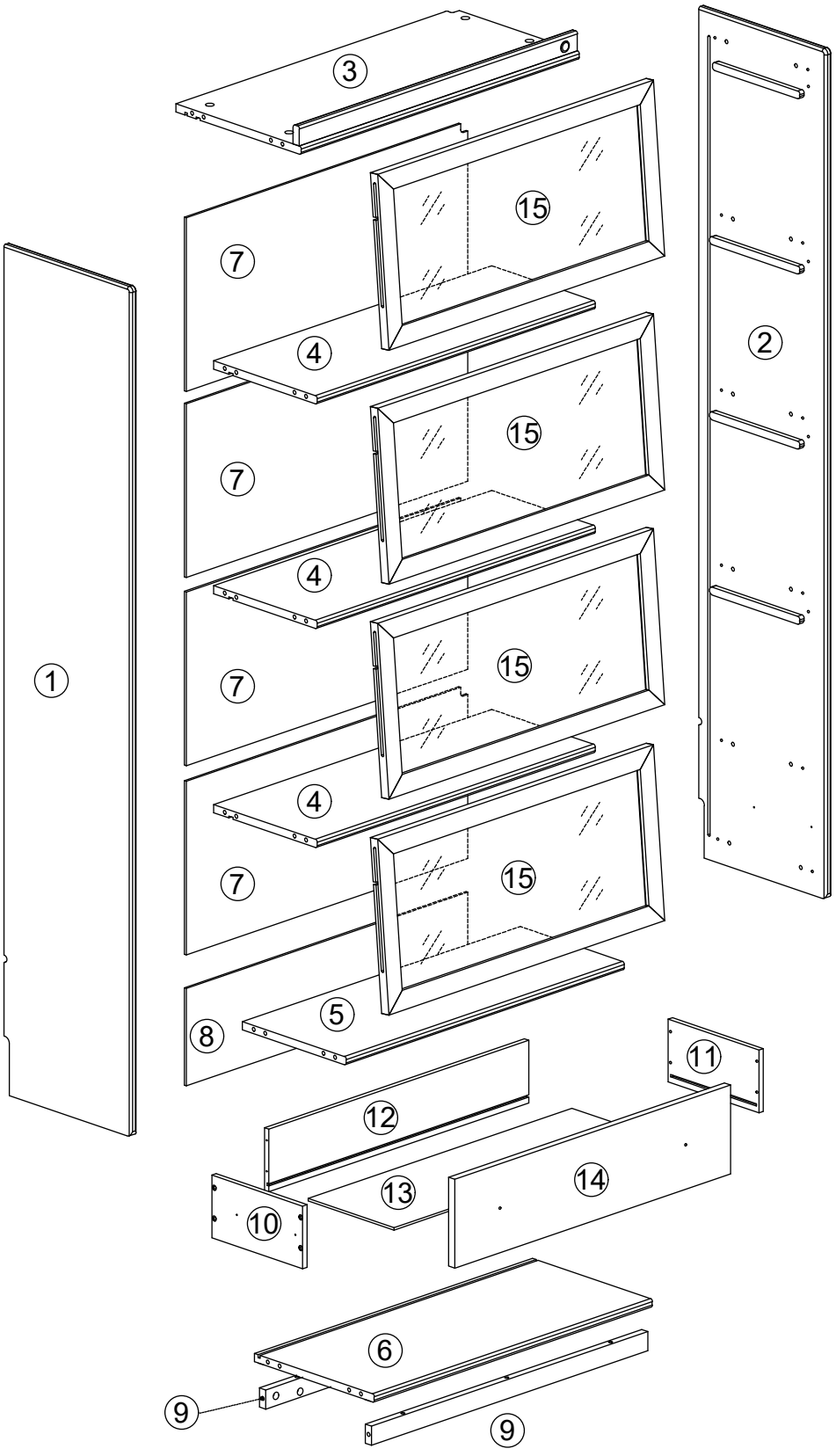

Parts list 1 / 2

Check and count all parts before assembly.

1 Left side panel

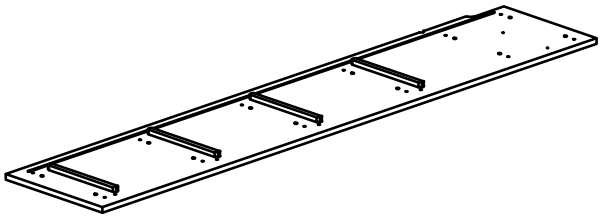

1 pc

2 Right side panel

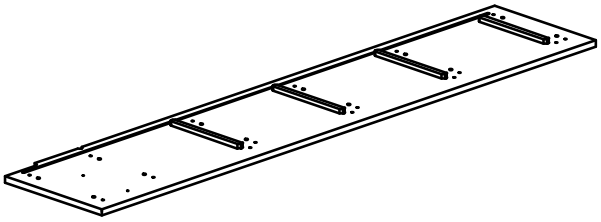

1 pc

3 Top panel

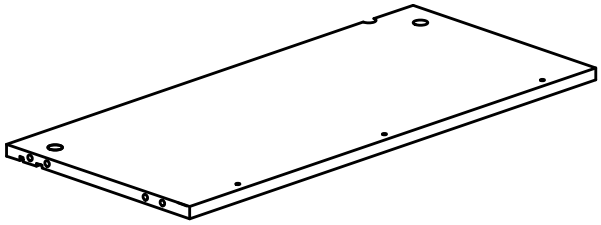

1 pc

4 Shelf

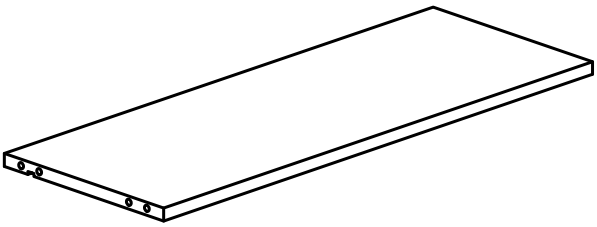

3 pcs

5 Lower panel

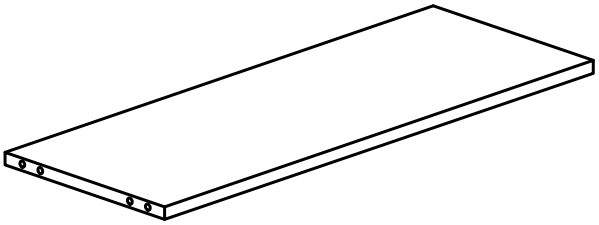

1 pc

6 Base panel

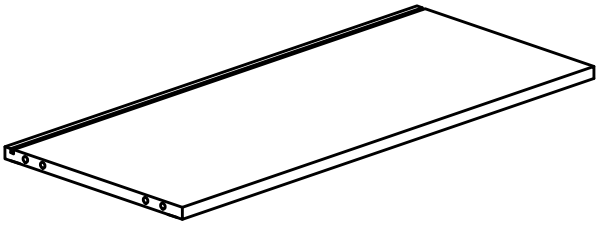

1 pc

7 Large back panel

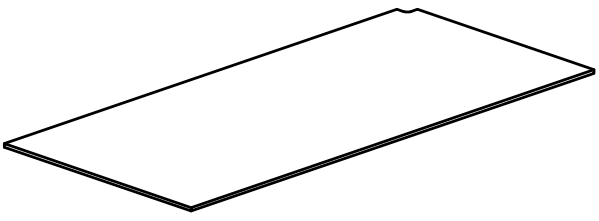

4 pcs

8 Small back panel

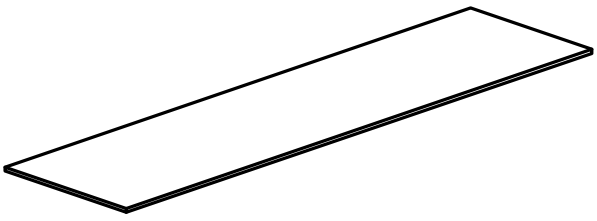

1 pc

Parts list 2 / 2

Check and count all parts before assembly.

9 Lower crossbar

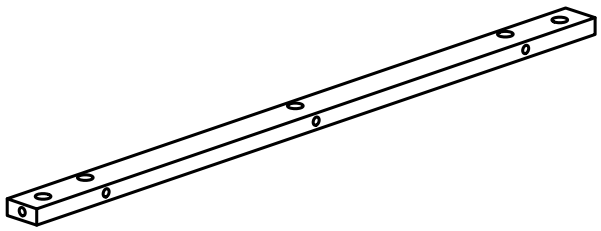

2 pcs

10 Left drawer side

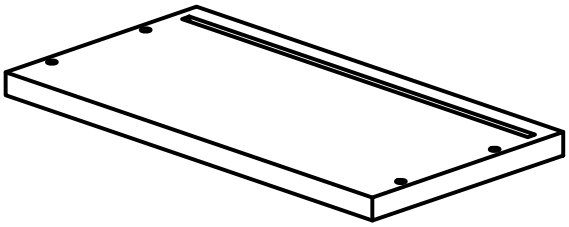

1 pc

11 Right drawer side

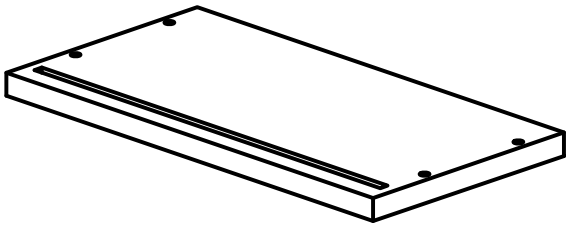

1 pc

12 Drawer back panel

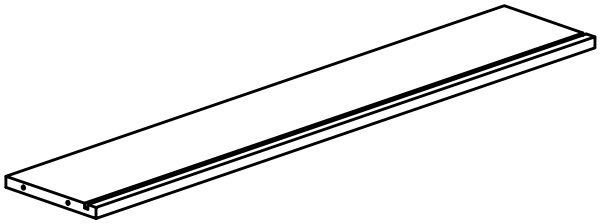

1 pc

13 Drawer bottom panel

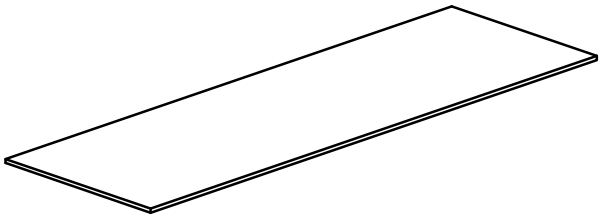

1 pc

14 Drawer front panel

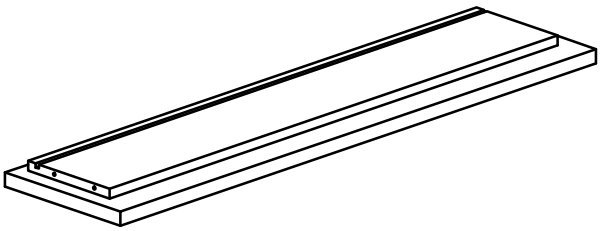

1 pc

15 Door frame

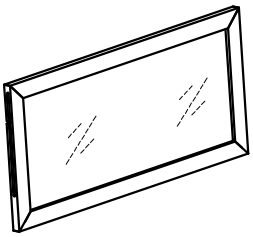

4 pcs

16 Top crossbar

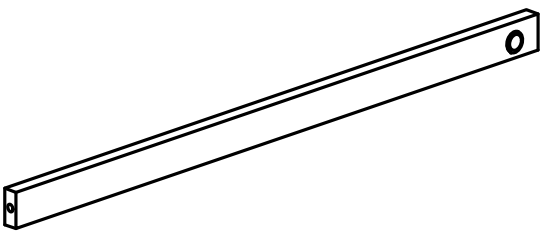

1 pc

Hardware and tools 1 / 2

Assembly quantities and spare pieces are listed separately.

A **Cam bolt**

L = 35 mm

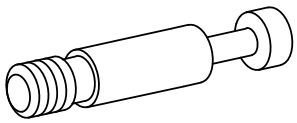

37 pcs + 3 spare

B **Cam lock**

Diameter 15 mm



37 pcs + 3 spare

C **Screw cover sticker**

Diameter 20 mm

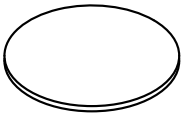

37 pcs + 3 spare

D **Wood dowel**

Diameter 8 x 30 mm

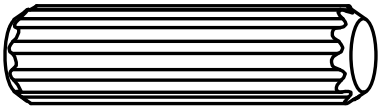

24 pcs + 2 spare

E **Pivot pin**

Diameter 5 x 17 mm

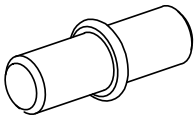

8 pcs + 1 spare

F **Tapered knob**

Diameter 20 x 23 mm

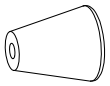

2 pcs

G **Handle screw**

M4 x 35 mm

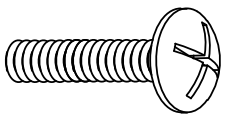

2 pcs + 1 spare

H **Door handle**

L = 600 mm

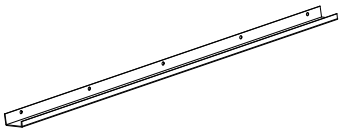

4 pcs

I **Pan-head wood screw**

Diameter 3.5 x 15 mm

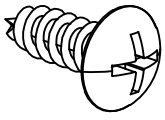

12 pcs + 1 spare

J **Back panel clip**

13 x 13 x 9.5 mm

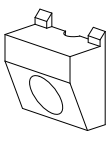

26 pcs + 2 spare

Hardware and tools 2 / 2

Assembly quantities and spare pieces are listed separately.

K **Flat-head wood screw**

Diameter 3 x 15 mm

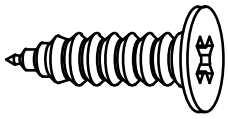

26 pcs + 2 spare

L **Three-section ball-bearing slide**

L = 200 x 45 mm / 8 inch; wall thickness 1 mm

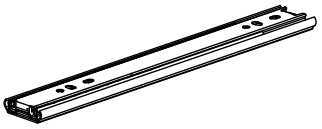

1 set (2 pieces)

M **Flat-head wood screw**

#3.5 x 12 mm

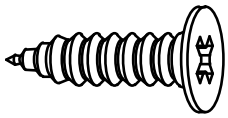

32 pcs + 3 spare

N **Self-tapping screw, flat end**

#8 x 25 mm

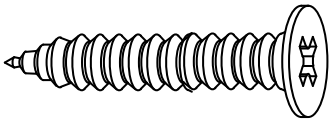

8 pcs + 1 spare

O **Nonwoven pad**

30 x 17 x 3 mm

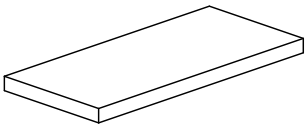

4 pcs + 1 spare

P **Cushion pad**

Diameter 10 x 3 mm

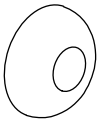

8 pcs + 1 spare

Q **Phillips screwdriver**

Diameter 6 x 128 mm

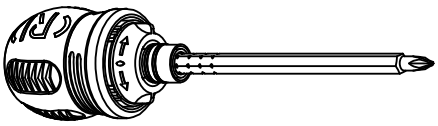

1 pc - reusable tool

R **Anti-tip hardware**

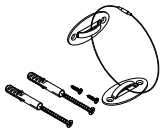

1 set

S **Light strip plug**

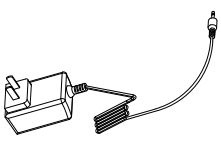

1 pc

Tool and screw guide

Ratchet screwdriver

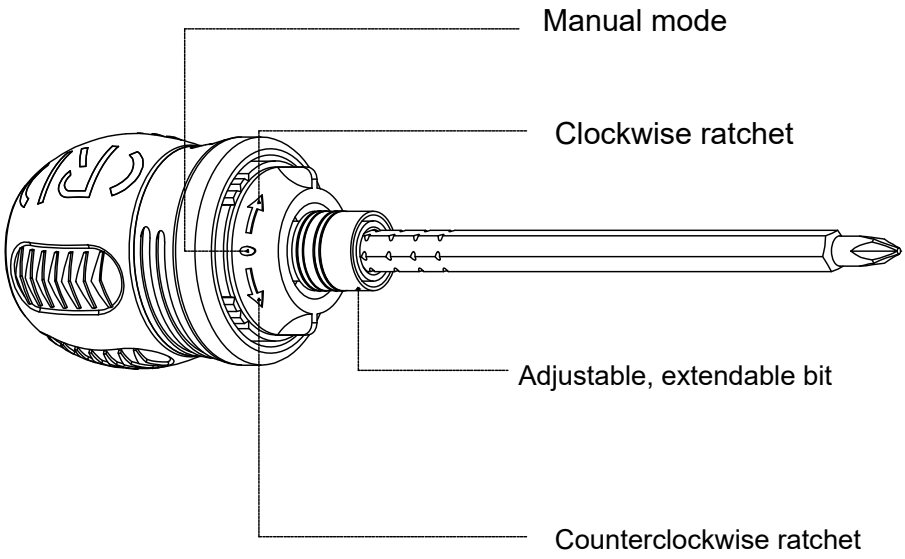

The screwdriver has manual, clockwise ratchet and counterclockwise ratchet settings. The bit can be adjusted and extended as shown.

Screw selection

Use the specified screws to avoid damaging the parts.

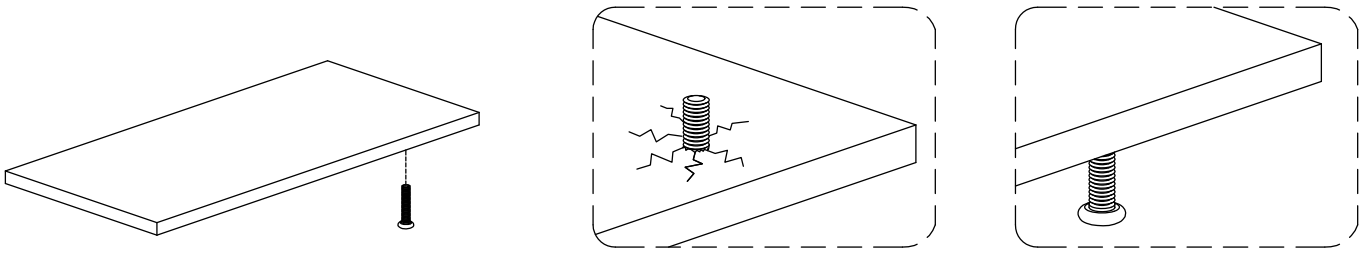

Example

Incorrect: may split the wood.

Correct screw size.

Cam locks and dowels

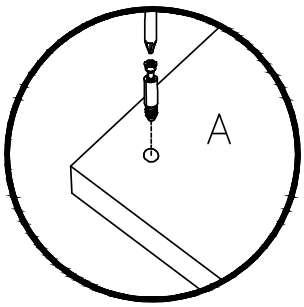

1. Screw the cam bolt into the panel.

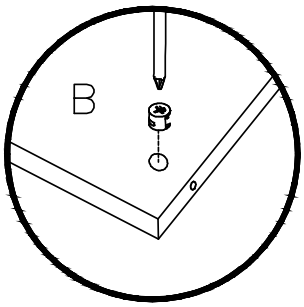

2. Insert the cam lock with its arrow pointing toward the panel edge.

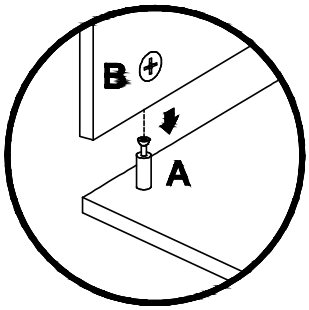

3. Align the cam bolts with the cam locks and fully insert them into the cross-bored holes.

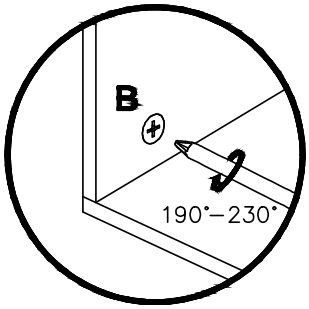

4. Turn each cam lock clockwise 190°–230° to lock the panels together.

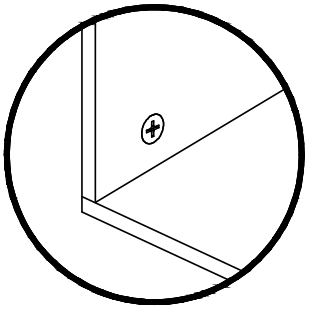

5. The panels should fit tightly together and the joint should be rigid.

Insert each wood dowel at least halfway. If necessary, tap it lightly with a rubber mallet.

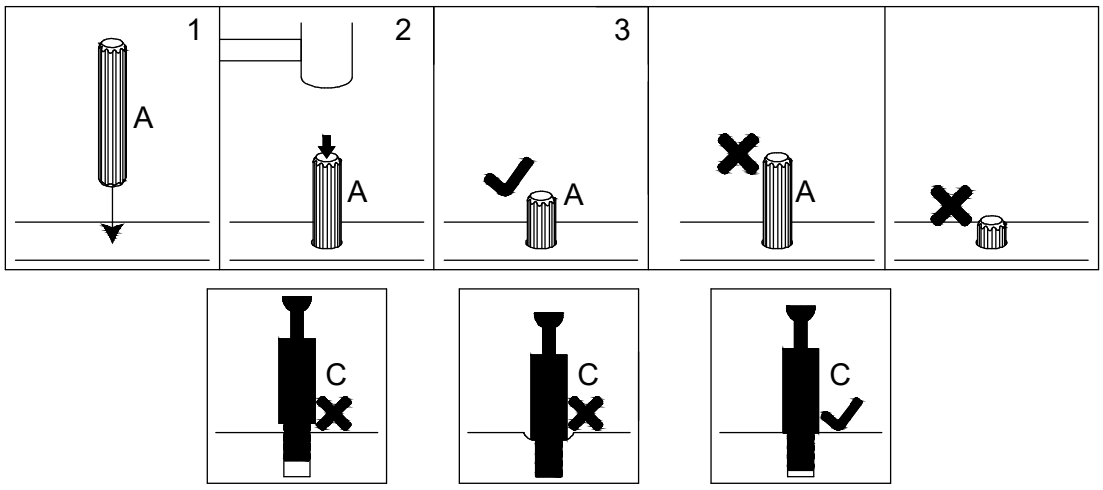

Warnings

• Place the unit on a level surface, or level it using the supplied hardware where applicable.

• Do not sit or stand on the assembled product. Do not allow children to climb, sit or stand on it.

• For safety, this unit must be secured to the wall. Do not use it without installing the tip restraint.

• The unit can tip over and cause severe injury or death.

• Do not exceed the recommended weight limits.

• Distribute weight evenly on each level and keep heavier loads at the bottom.

• Before cutting, drilling or hammering into any wall or floor, locate electrical wiring, plumbing and gas lines. Cutting into these services may cause serious injury.

01 Fit the cabinet drawer slides

Pull slide L apart. Press the black release tab to separate the cabinet rail and drawer rail. Set the drawer rails aside. Extend the inner section of each cabinet rail and fix the cabinet rails to panels 1 and 2 with six screws M in the holes shown. Observe the front and rear ends.

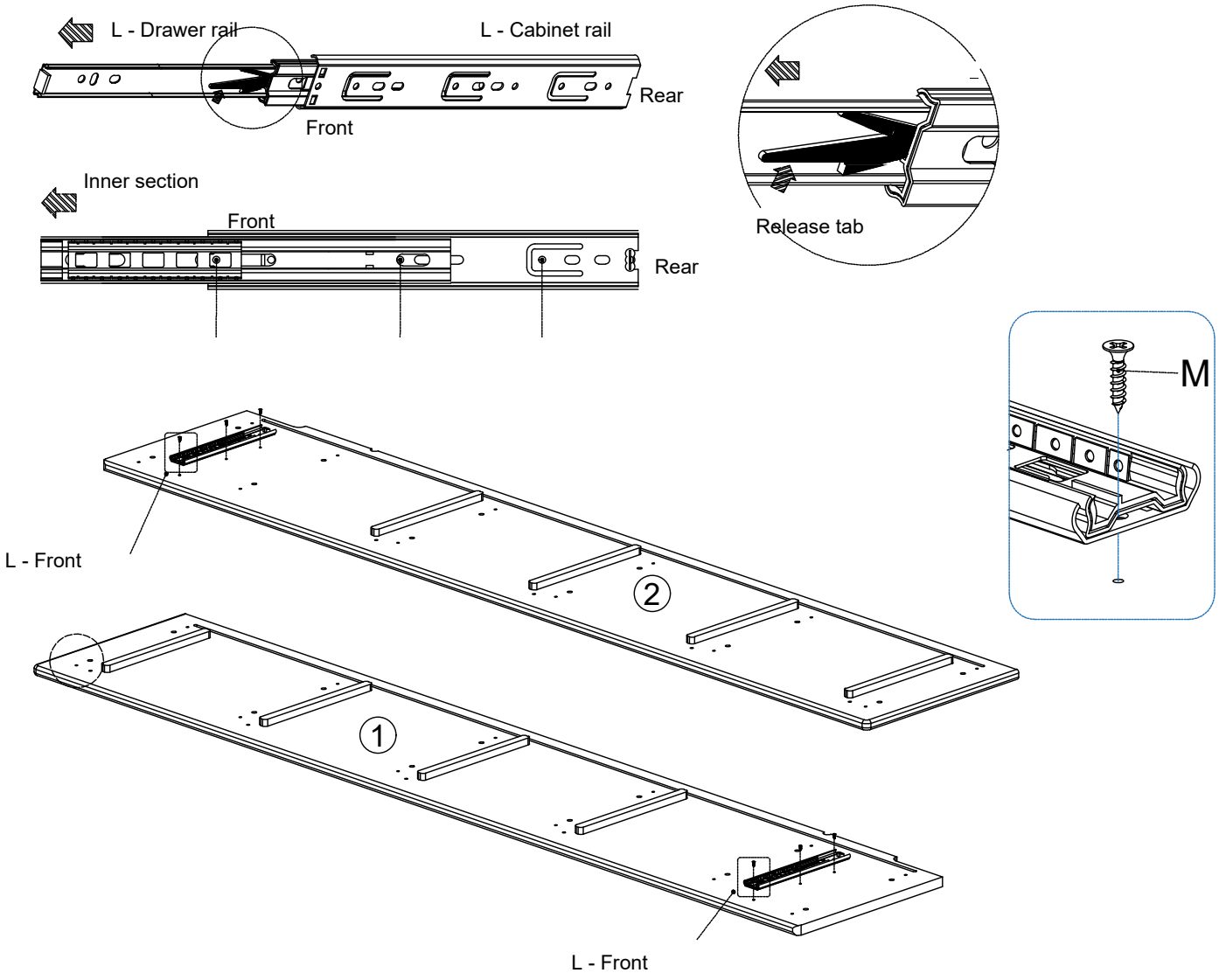

HARDWARE **M x 6**

TOOLS Q - Phillips screwdriver (reused)

02 Fit the drawer rails

Fix the separated drawer rails L to drawer sides 10 and 11 with six screws M. Follow the rail orientation and screw positions shown.

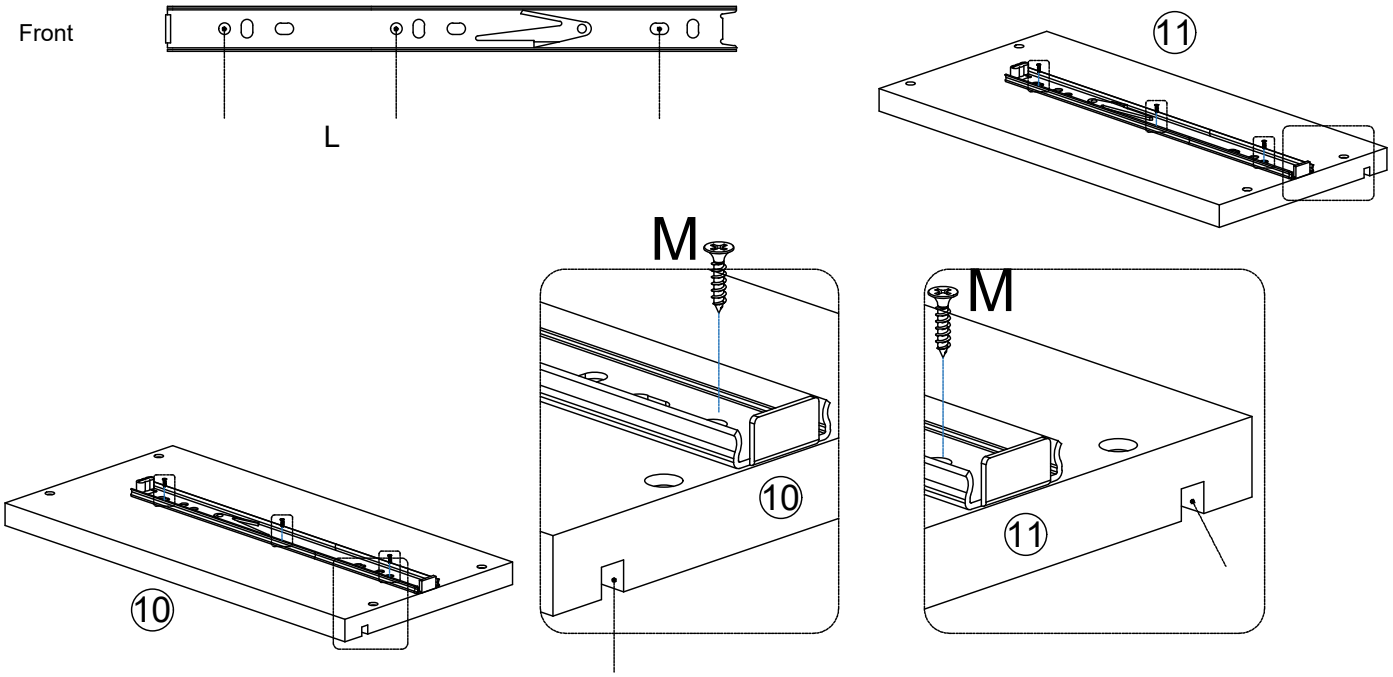

HARDWARE **M x 6**

TOOLS Q - Phillips screwdriver (reused)

03 Install the cam bolts

Use screwdriver Q to install thirty-seven cam bolts A in panels 1, 2, 3 and 6 at the positions shown.

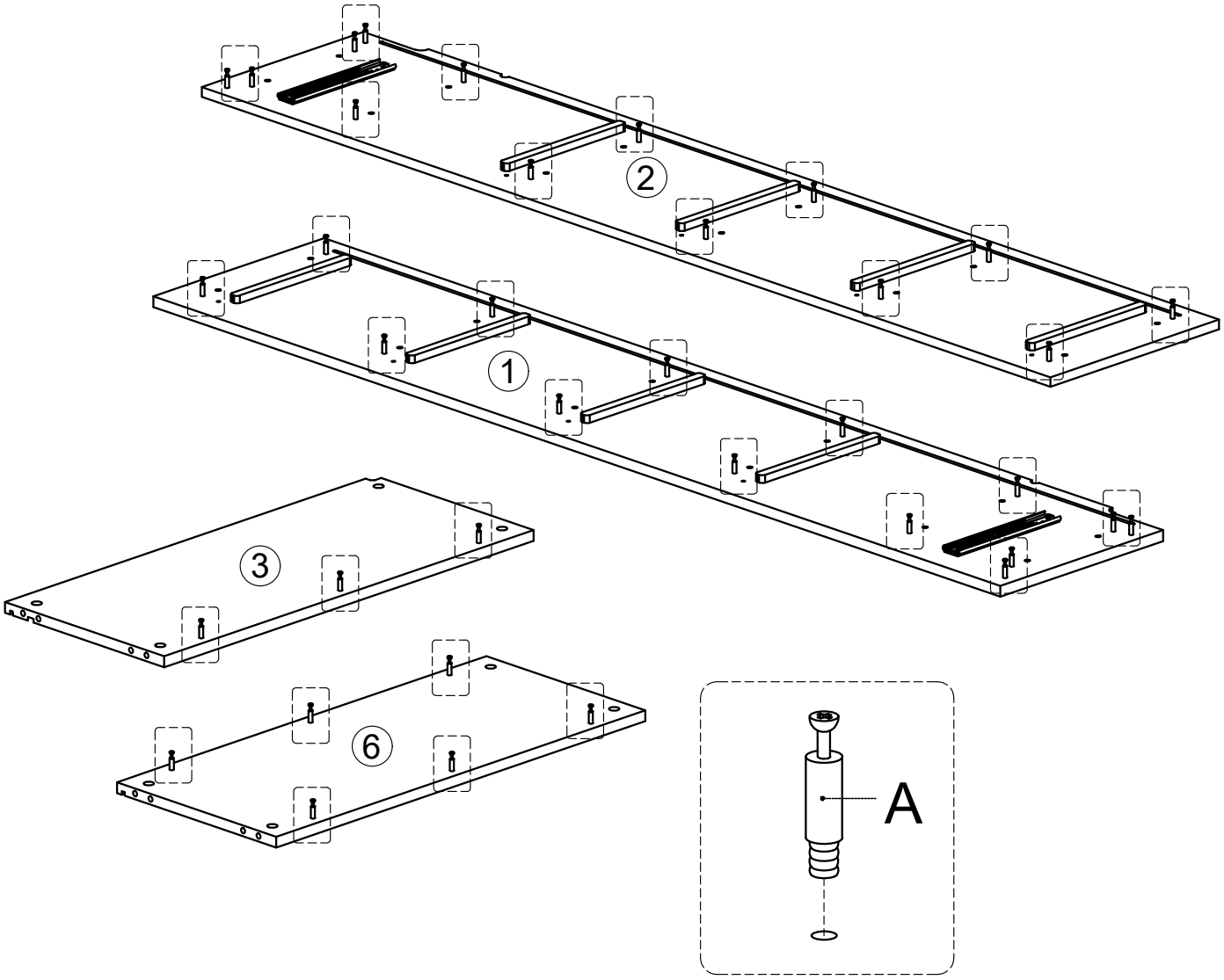

HARDWARE **A x 37**

TOOLS Q - Phillips screwdriver (reused)

04 Assemble the top and base panels

Attach crossbar 16 to top panel 3, and both crossbars 9 to base panel 6. Lock the joints with nine cam locks B using screwdriver Q. Cover the cam locks with nine stickers C.

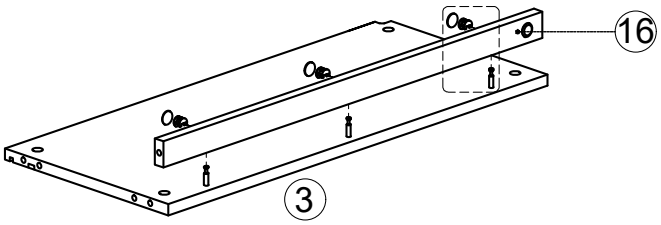

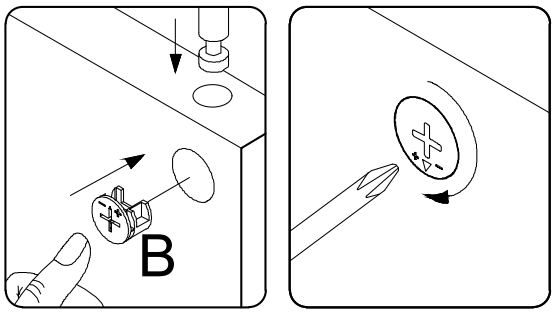

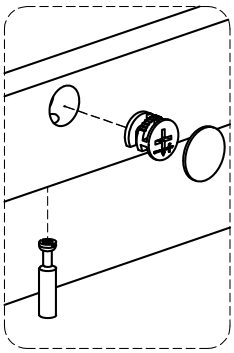

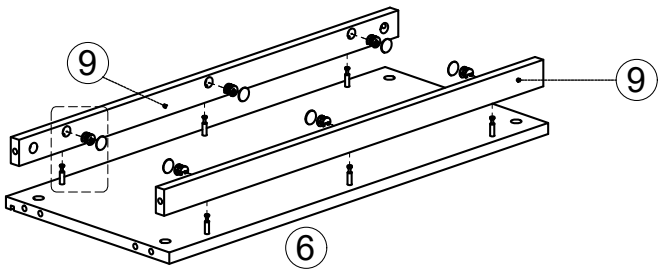

HARDWARE **B x 9 C x 9**

TOOLS Q - Phillips screwdriver (reused)

05 Attach the horizontal panels

Join side panel 1 from Step 3 to top panel 3, shelves 4, lower panel 5 and the base assembly 6 from Step 4, as shown. Use fourteen cam locks B and twelve dowels D. Tighten the cam locks with screwdriver Q and cover them with fourteen stickers C.

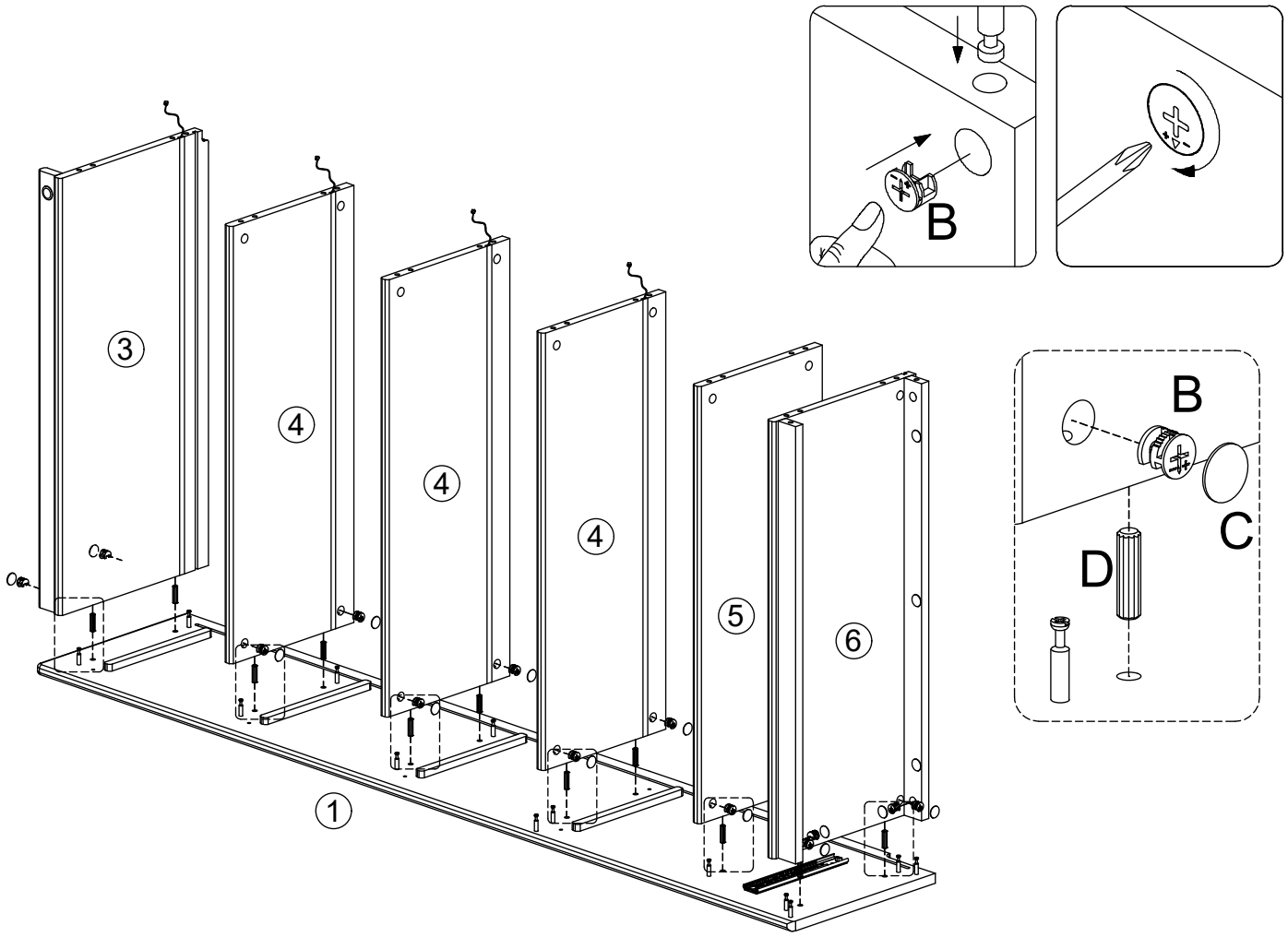

HARDWARE **B x 14 C x 14 D x 12**

TOOLS Q - Phillips screwdriver (reused)

06 Insert the back panels

Insert back panels 7 and 8 into the assembly from Step 5 and fit twelve dowels D in the positions shown. Keep the notch in back panel 7 at the upper right. Pull the LED strip connector through this notch and route it to the back.

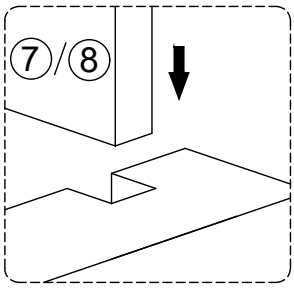

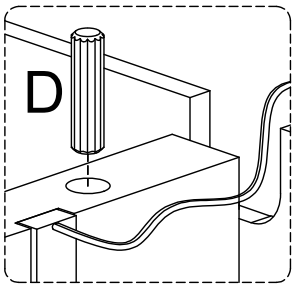

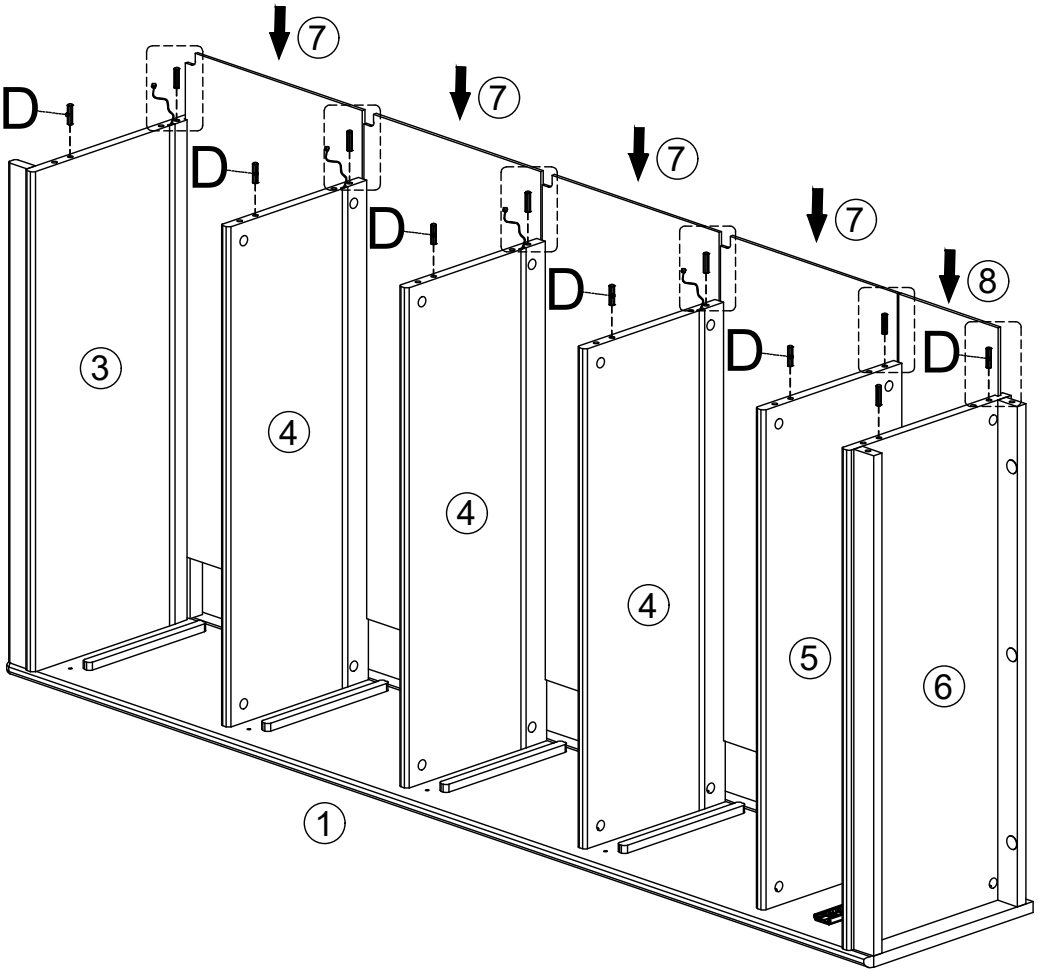

HARDWARE **D x 12**

07 Attach the second side panel

Attach side panel 2 to the assembly from Step 6. Lock the joints with fourteen cam locks B using screwdriver Q, then cover them with fourteen stickers C.

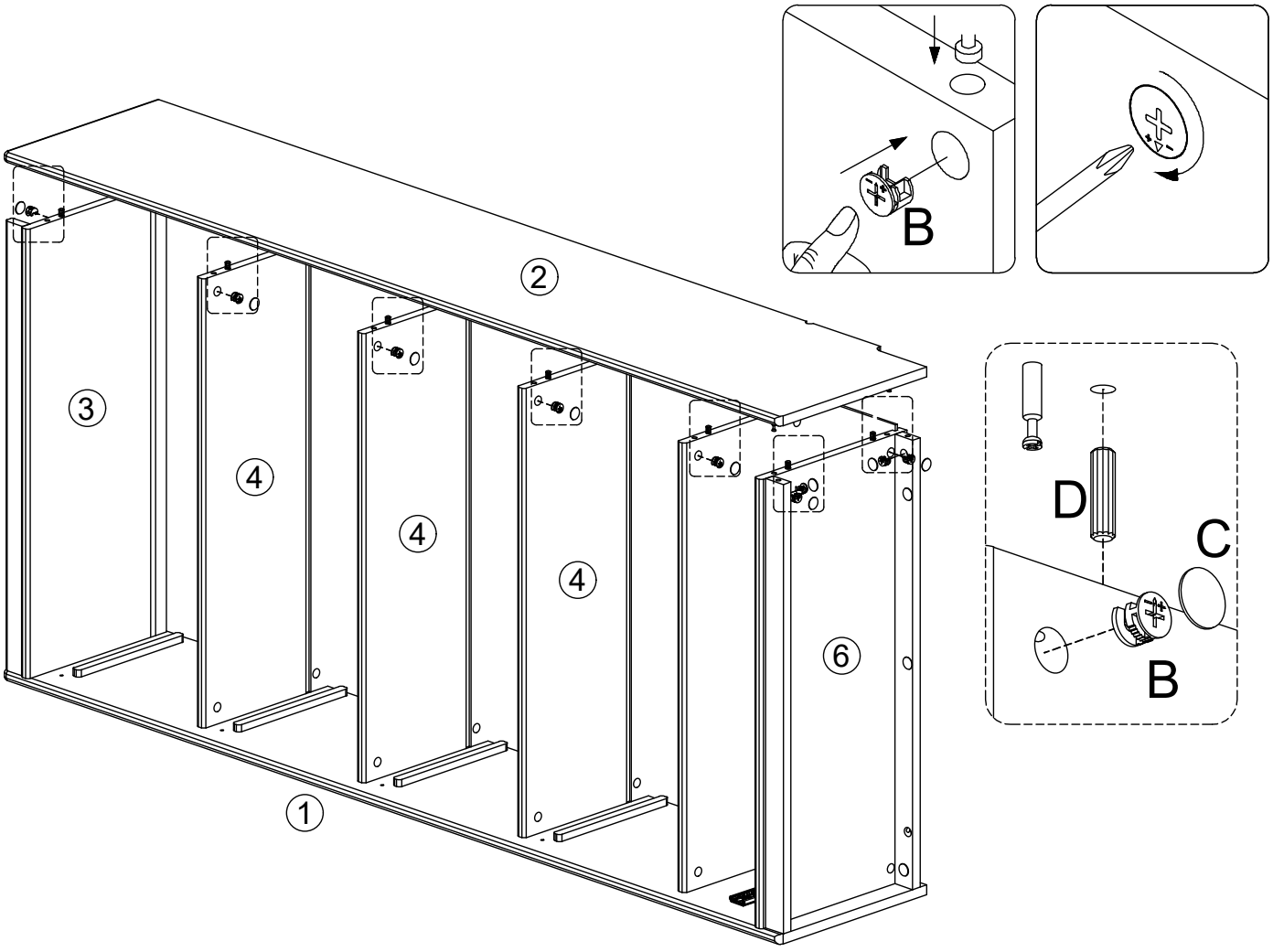

HARDWARE **B x 14 C x 14**

TOOLS Q - Phillips screwdriver (reused)

08 Secure the base and fit the pads

Install twelve screws I at the positions shown on the assembly from Step 7 using screwdriver Q. Fit four pads O to the bottoms of side panels 1 and 2.

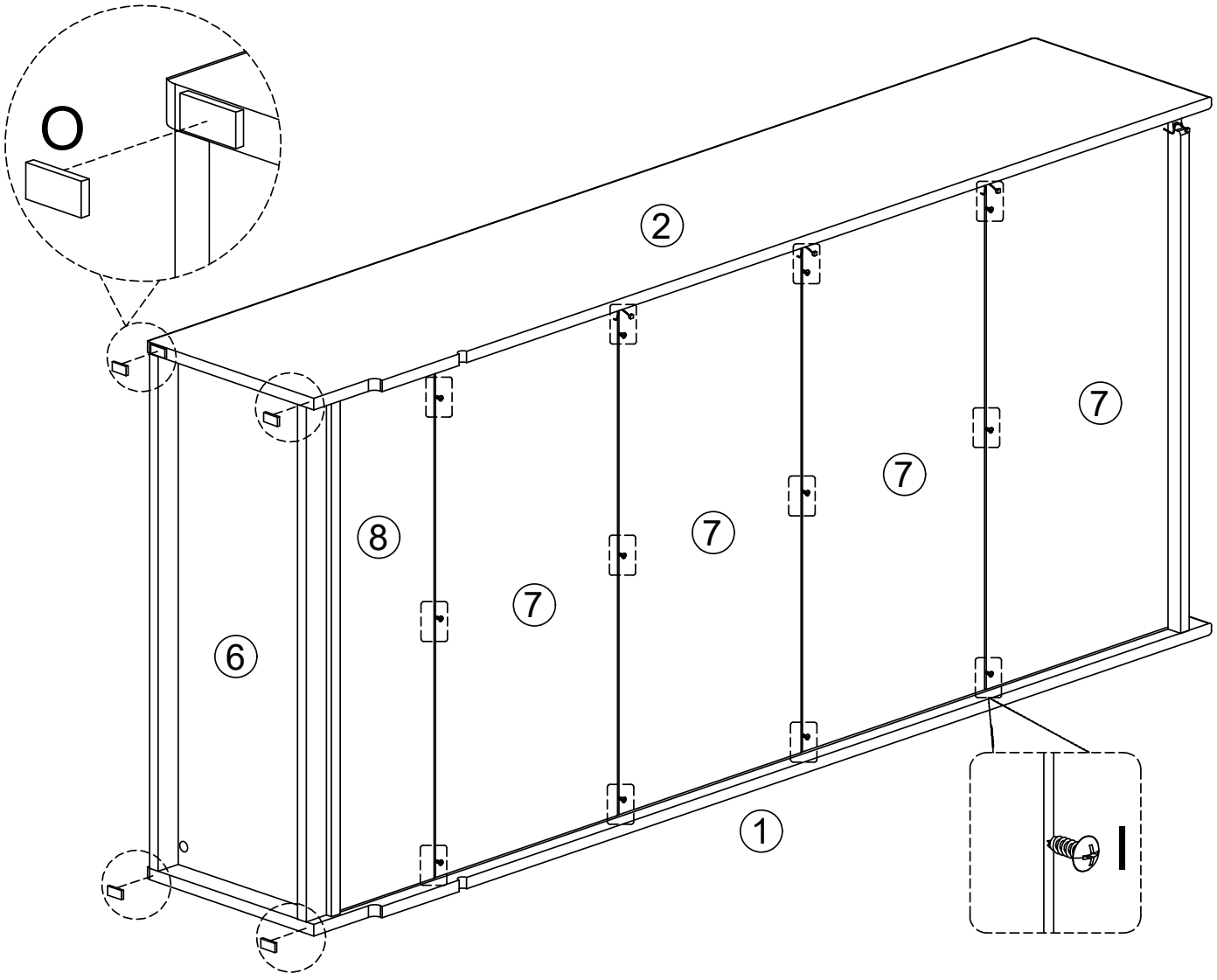

HARDWARE **I x 12 O x 4**

TOOLS Q - Phillips screwdriver (reused)

09 Secure the back and connect the lights

Stand the assembly from Step 8 upright. Fit twenty-six clips J with twenty-six screws K as shown in Figure 1. Connect the control switch and plug S as shown in Figure 2. Connect the light strip terminals on each level to the control switch terminals as shown in Figure 3.

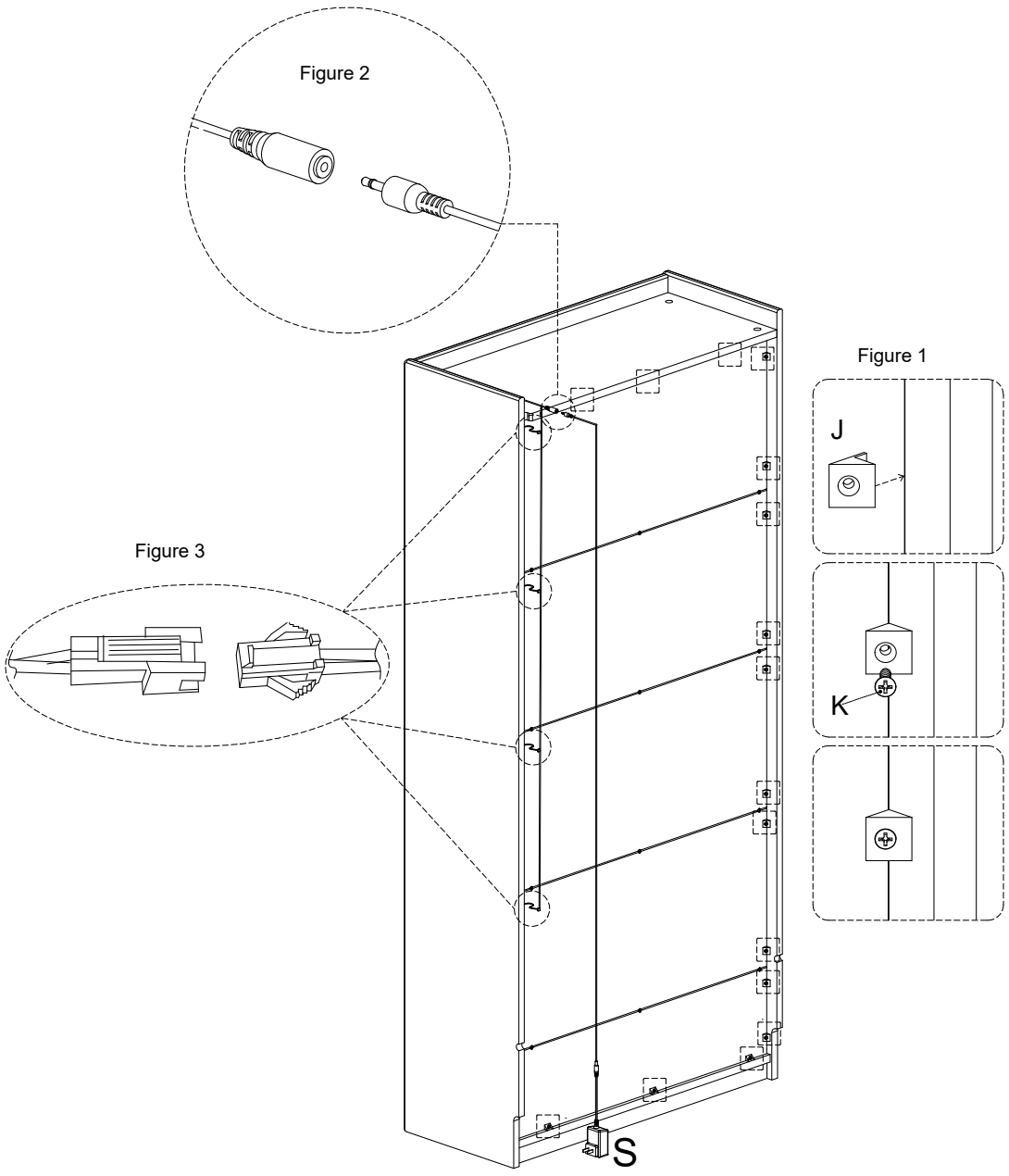

HARDWARE **J x 26 K x 26 S x 1**

TOOLS Q - Phillips screwdriver (reused)

10 Fit the pivots and cushions

Fit eight pivot pins E and eight cushion pads P to the cabinet assembled in Step 9, at the positions shown.

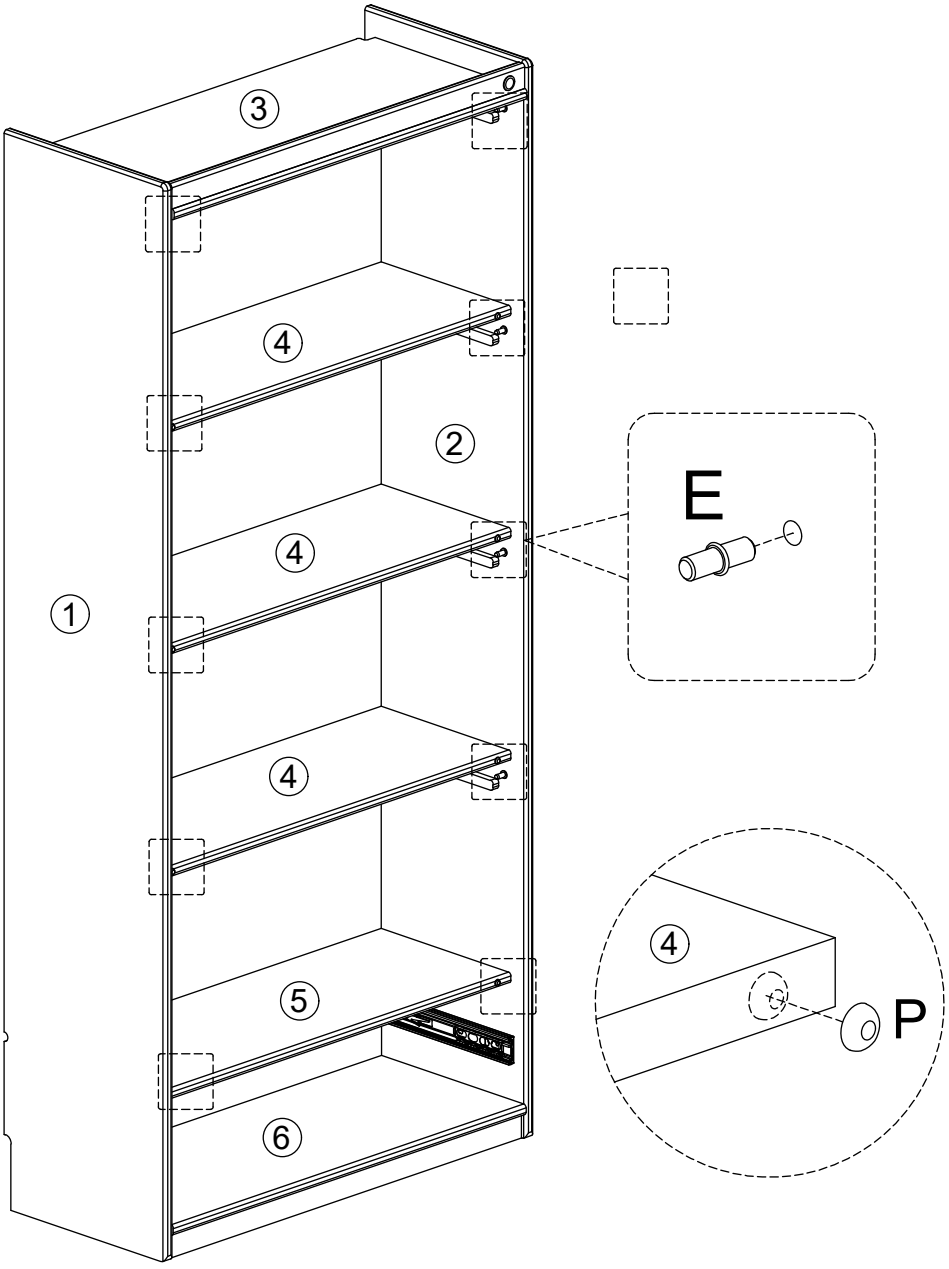

HARDWARE **E x 8 P x 8**

11 Attach the door handles

Attach handle H to door frame 15 using screwdriver Q at the positions shown. Repeat for all four door frames.

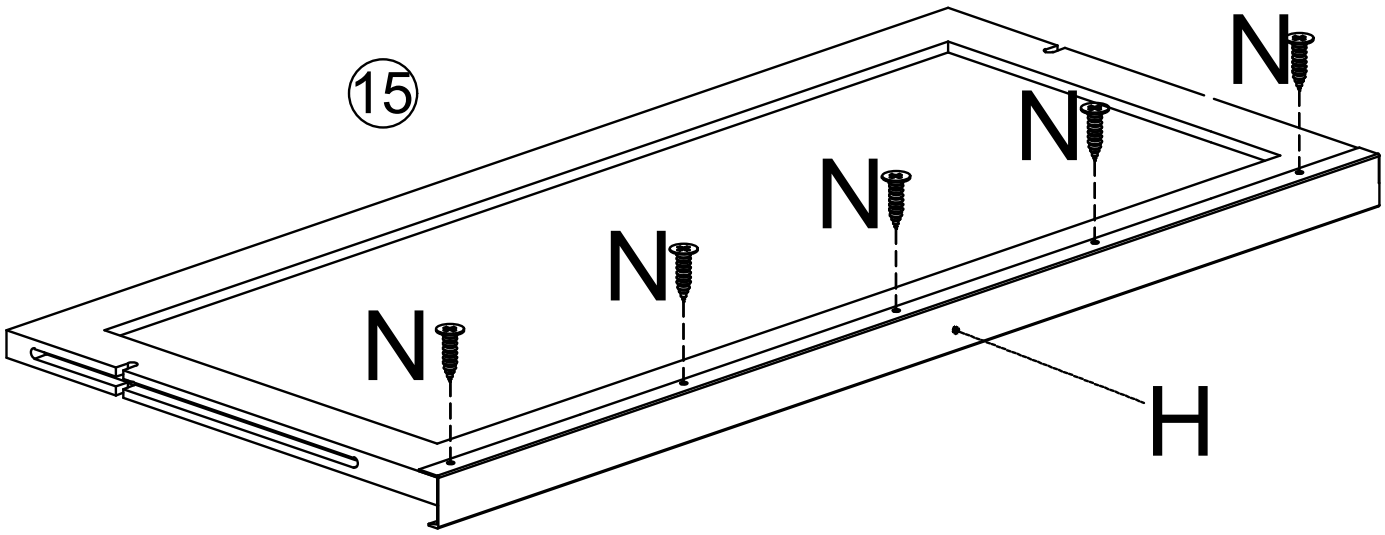

Four door frames; quantities shown are totals for all four.

HARDWARE **H x 4 M x 20**

TOOLS Q - Phillips screwdriver (reused)

12 Install the door frames

Install the four door frames 15 from Step 11 in the cabinet from Step 10. Place each door frame horizontally along its rails and align its notch with pivot E. Push it along the rails to stow it; pull it out to close it.

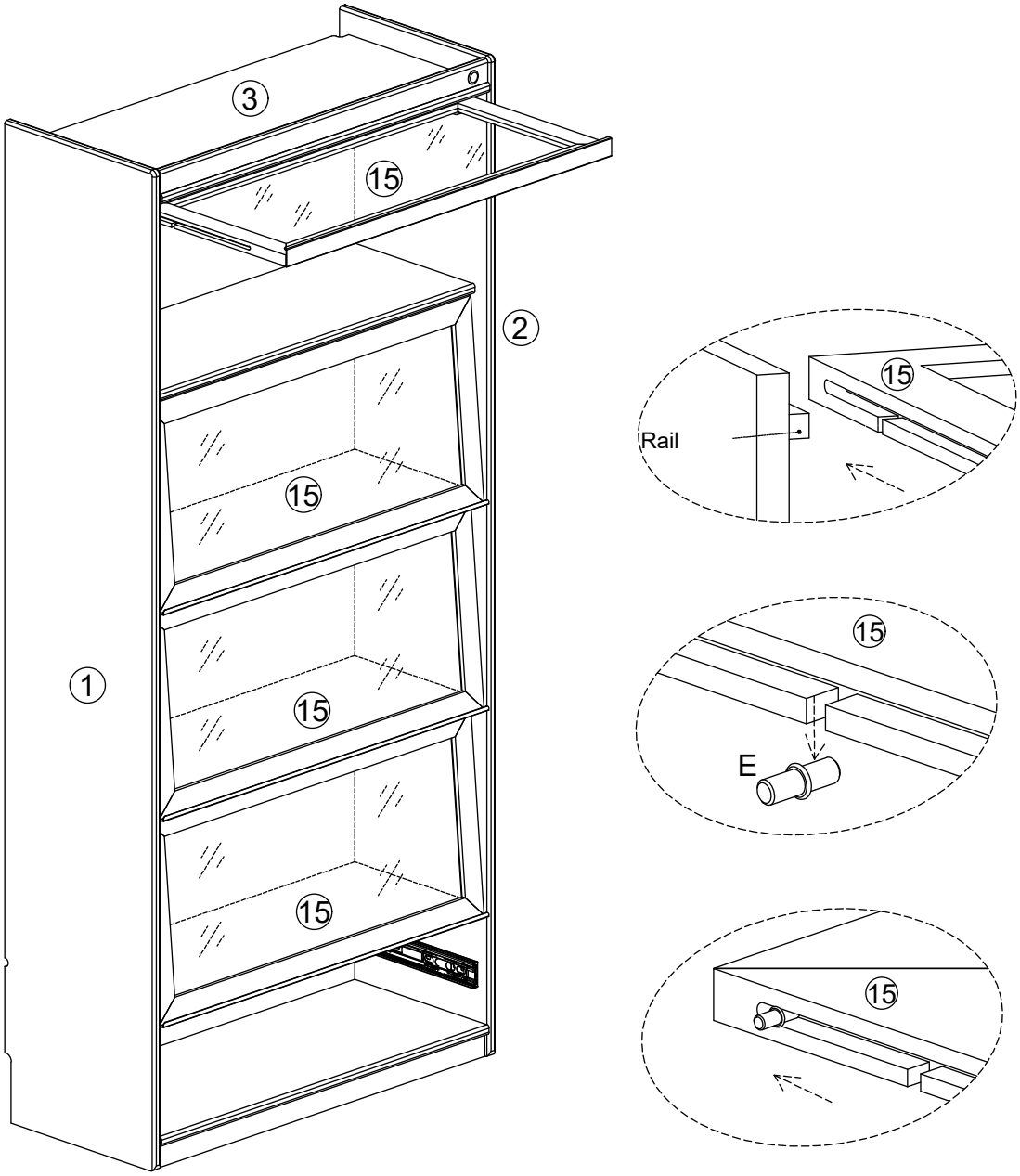

HARDWARE **No additional hardware**

13 Assemble the drawer sides

Join drawer sides 10 and 11 to drawer front 14 with four screws N using screwdriver Q.

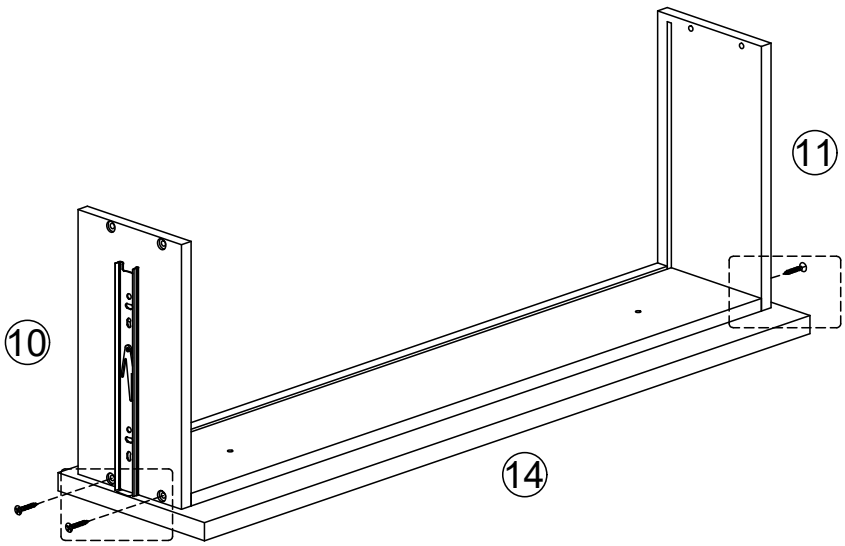

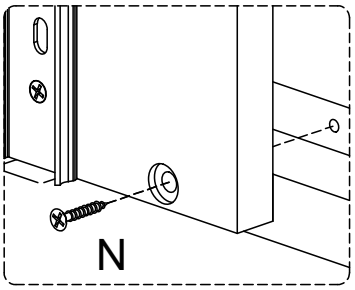

HARDWARE **N x 4**

TOOLS Q - Phillips screwdriver (reused)

14 Insert the drawer bottom

Slide drawer bottom 13 into the grooves in the assembly from Step 13, as shown.

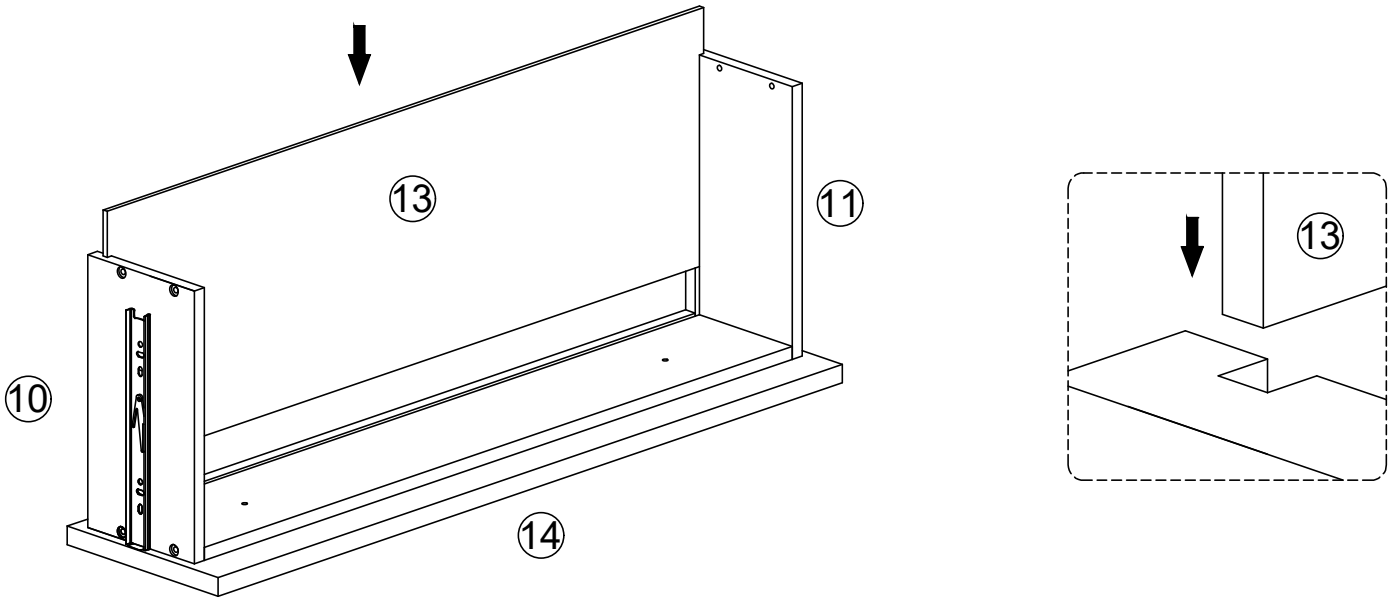

HARDWARE **No additional hardware**

15 Attach the drawer back

Attach drawer back 12 to the assembly from Step 14 with four screws N using screwdriver Q.

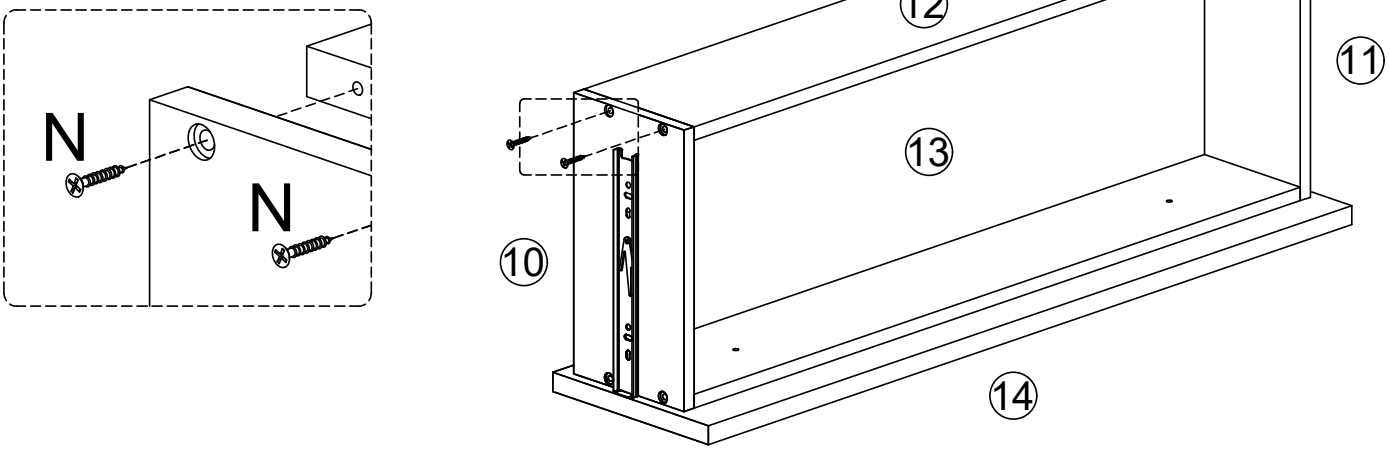

HARDWARE **N x 4**

TOOLS Q - Phillips screwdriver (reused)

16 Attach the drawer knobs

Attach two knobs F to drawer front 14 with two screws G using screwdriver Q.

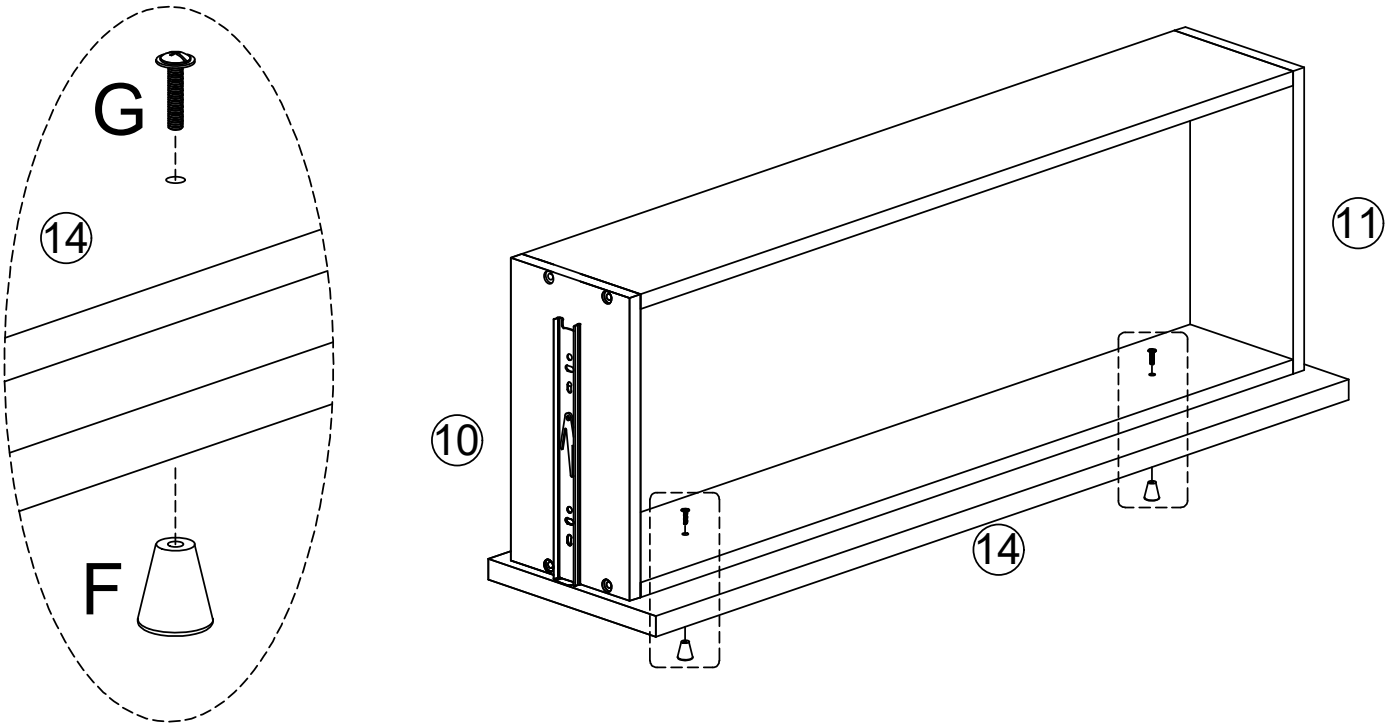

HARDWARE **F x 2 G x 2**

TOOLS Q - Phillips screwdriver (reused)

17 Insert the drawer

Pull the inner ball-bearing sections of both cabinet rails all the way out until they stop. They may be slightly greasy. Align the drawer rails with the extended inner sections, then push the drawer from Step 16 gradually into the cabinet from Step 12.

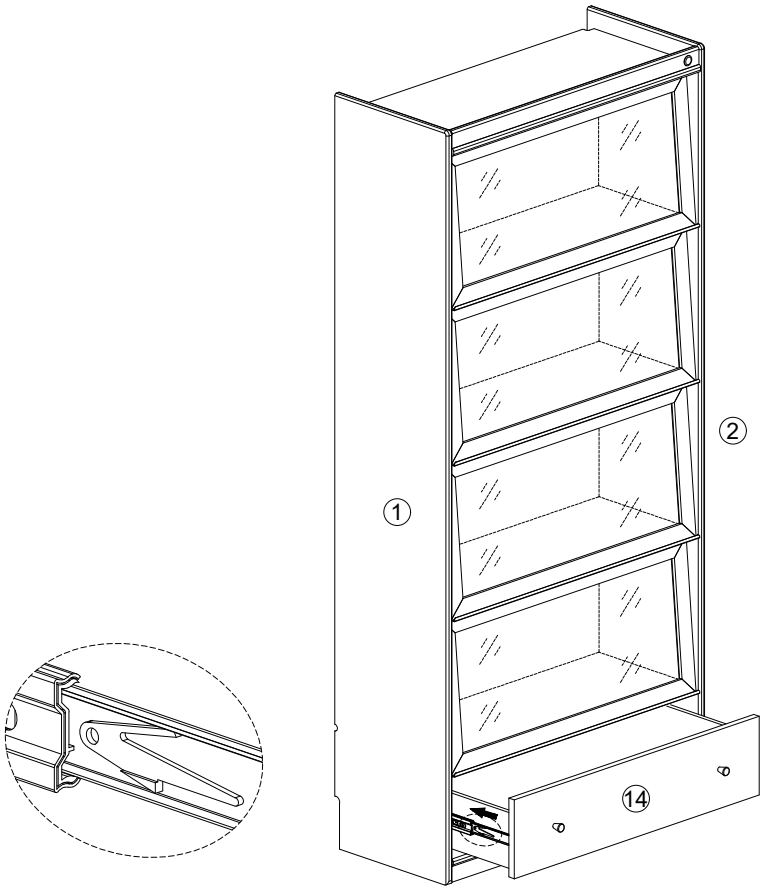

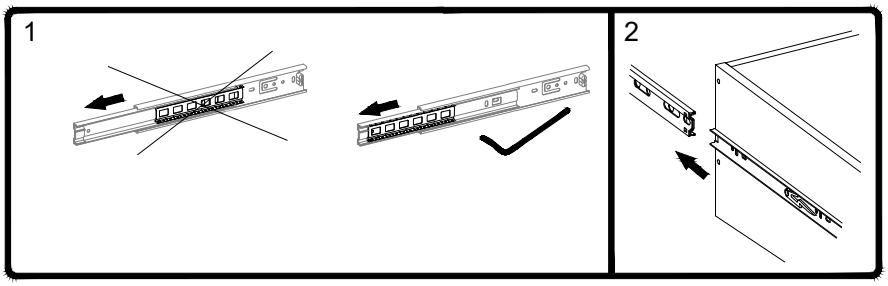

HARDWARE **No additional hardware**

18 Secure the cabinet to the wall

Use anti-tip hardware R to secure the assembly from Step 17 to the wall, as shown. Do not use the cabinet without the tip restraint installed.

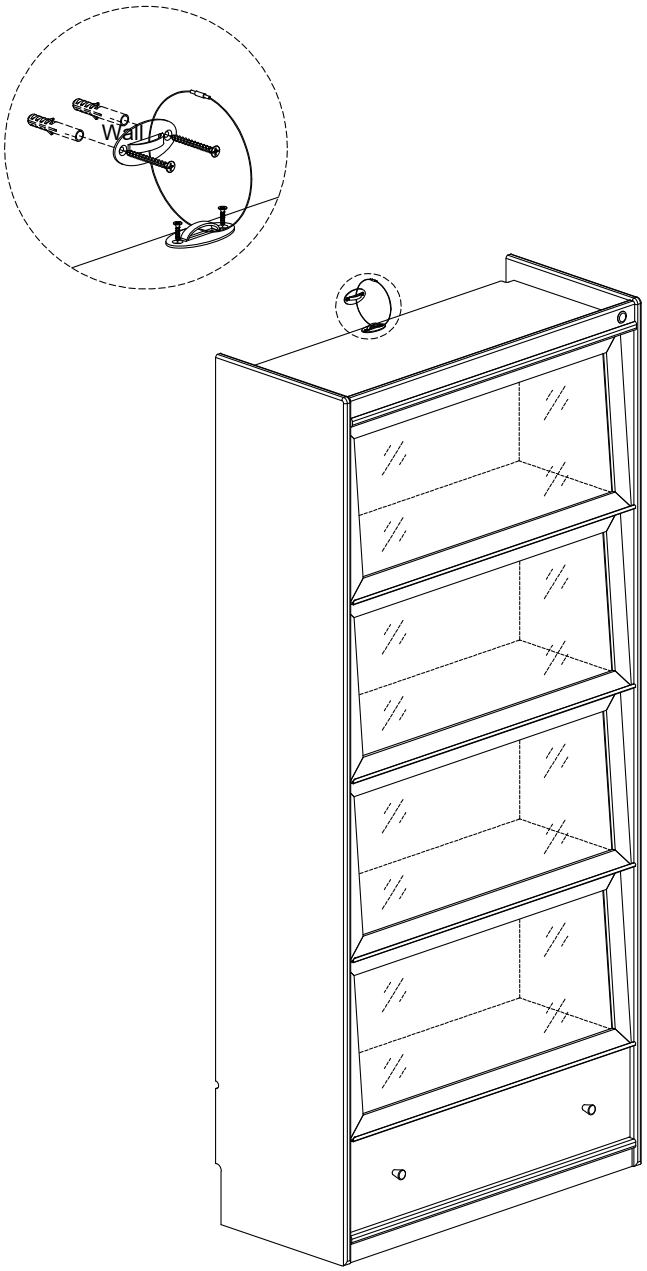

HARDWARE **R x 1**

19 Complete assembly

Assembly is complete. Once all components are installed, plug in the power cord. The touch switch is shown in the diagram.

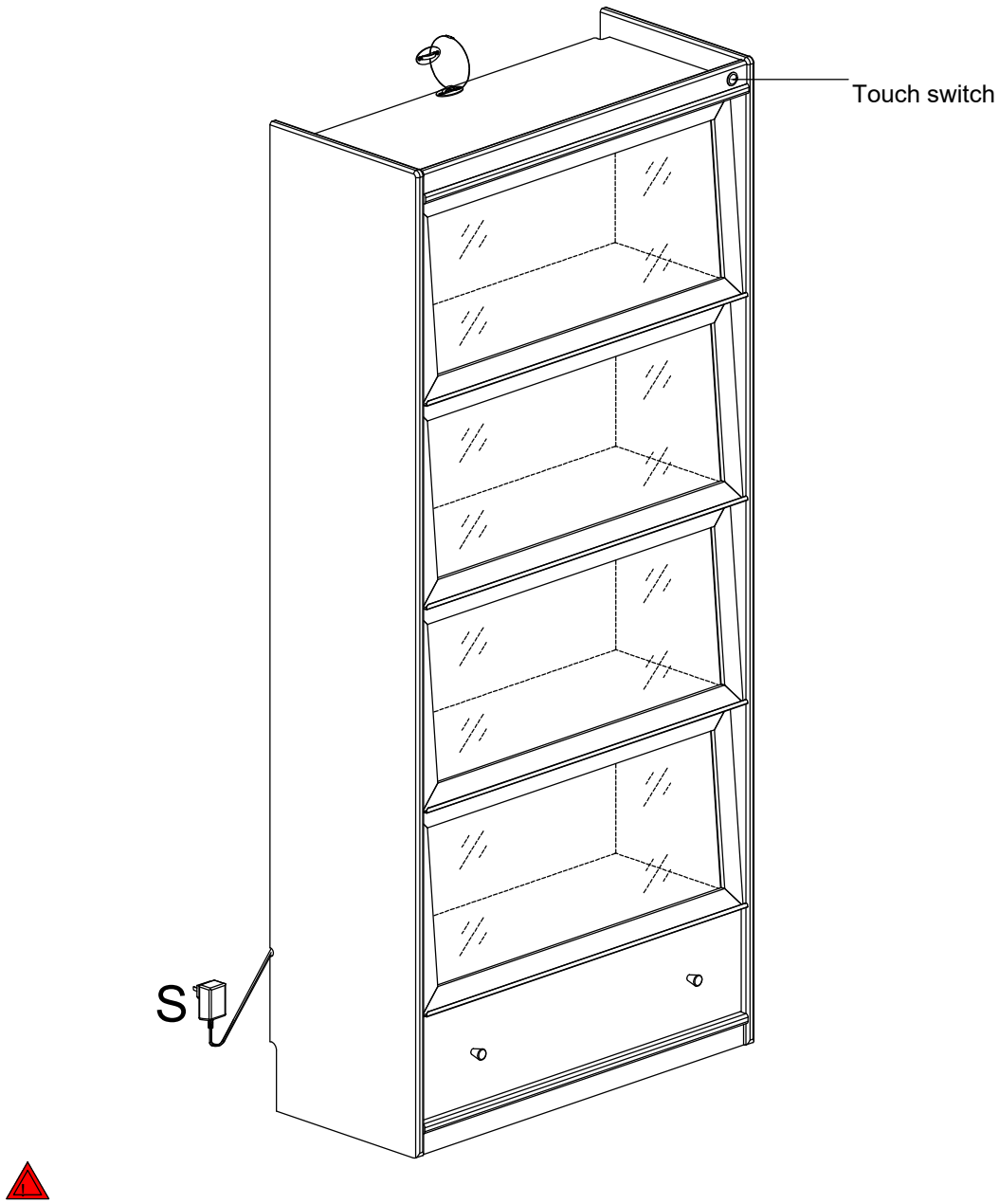

HARDWARE **No additional hardware**