# ASSEMBLY INSTRUCTION

## NAILHEAD TRIM ARM SOFA

**A** Seat Frame

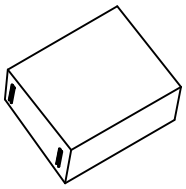

1pc

**B** Back Frame

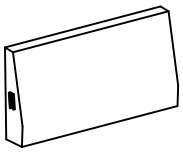

1pc

**C** Left Panel

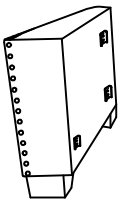

1pc

**D** Right Panel

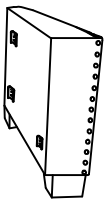

1pc

**E** Seat Cushion

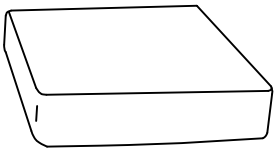

3pcs

**F** Back Cushion

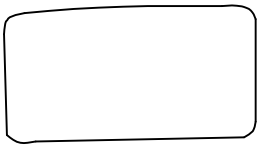

3pcs

**G** Plastic Leg

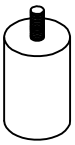

2pcs

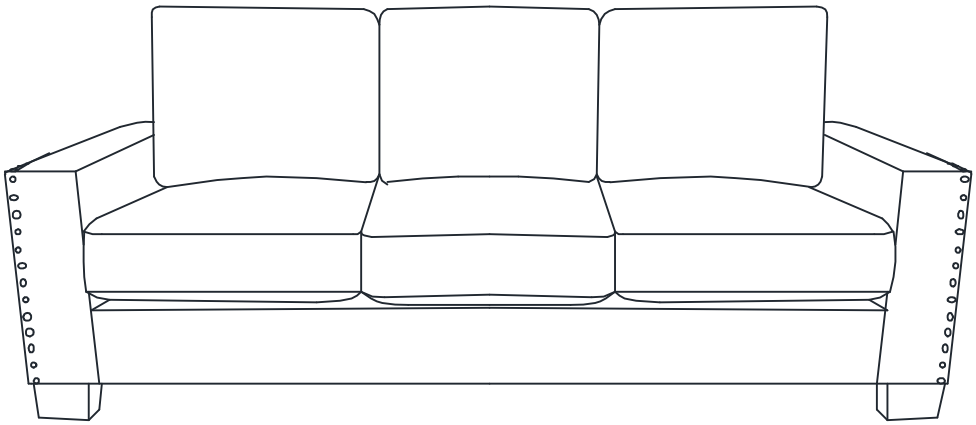

This page lists all the contents included in the box. As you unpack and prepare for assembly, place the contents on a carpeted or padded area to protect them from damage.

## 1 Hook on the Left Panel (C) & Right Panel (D) to Seat Frame (A) properly.

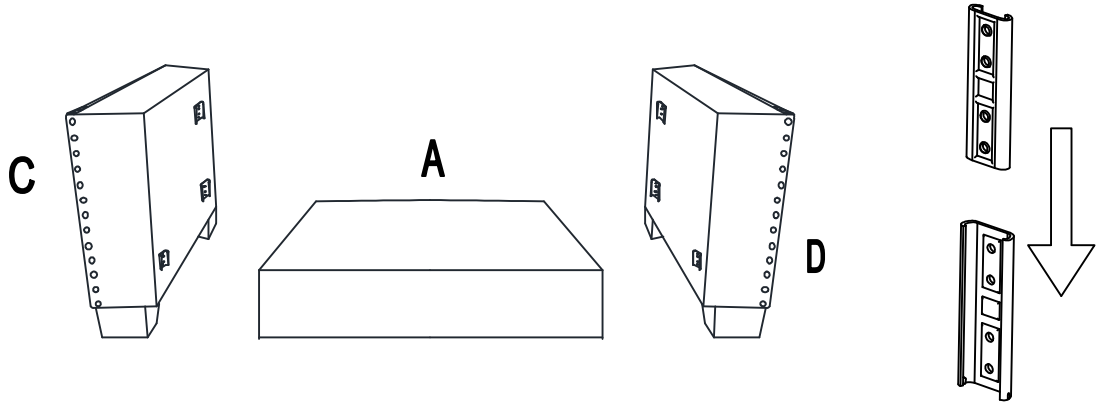


## 2 Assembly the Plastic Leg (G) at the bottom of Seat Frame (A) as picture showing.

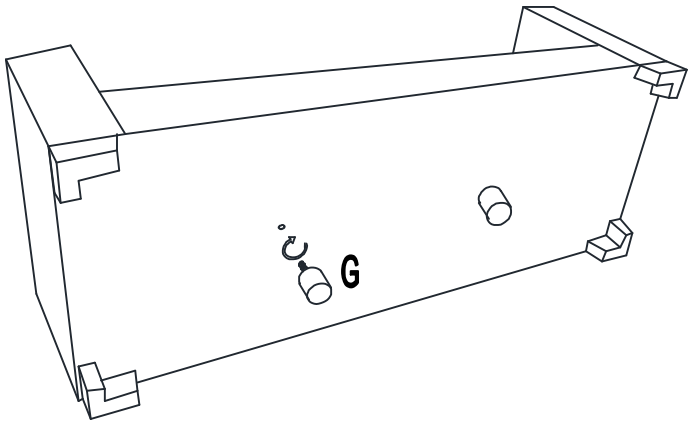


## 3 Hook on the Back Frame (B) to Left Panel (C) & Right Panel (D) properly.

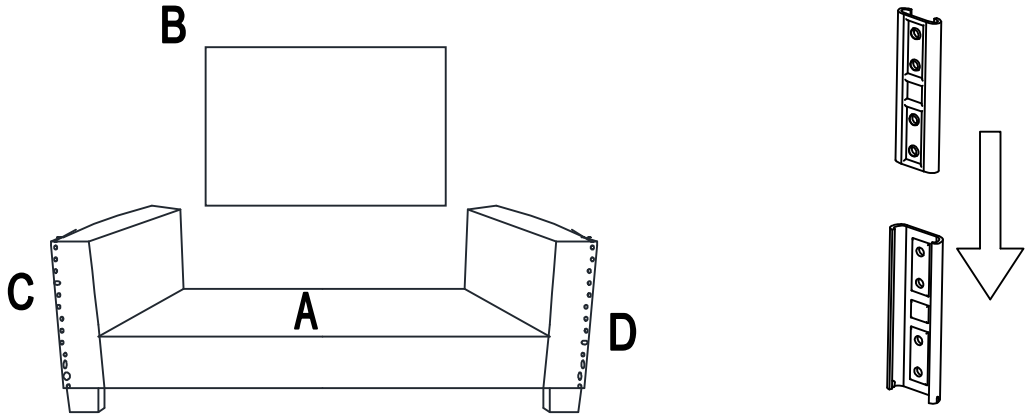

**4** Place Seat Cushion (E) and Back Cushion (F) on the chair properly.

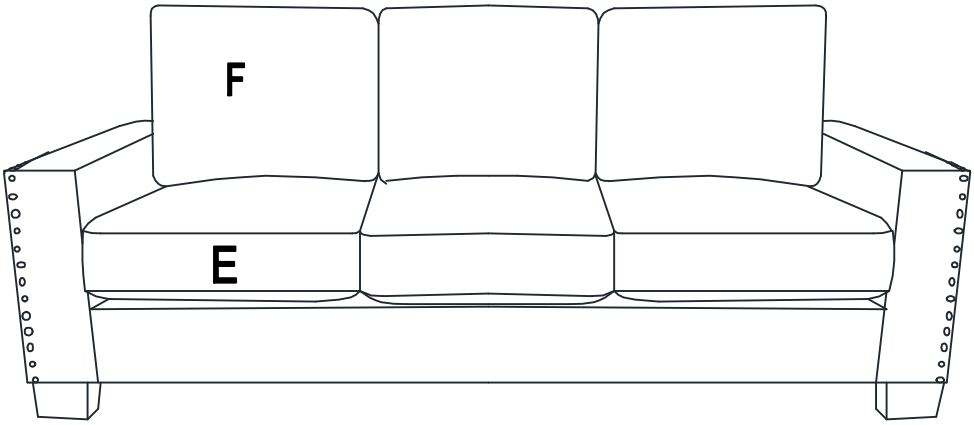


## Cleaning & Care

Treat surface with care. Surface is resistant to scratches but is not scratch resistant. Clean surfaces with a dry or damp soft cloth.Do not use abrasive cleaners.