Model number:
G-115-416

DIMENSIONS

Streamline

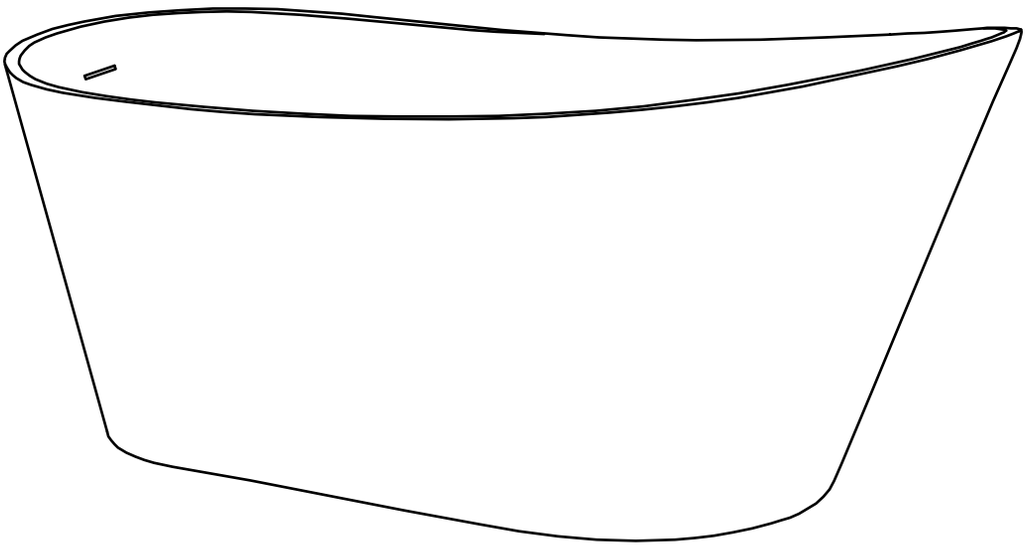

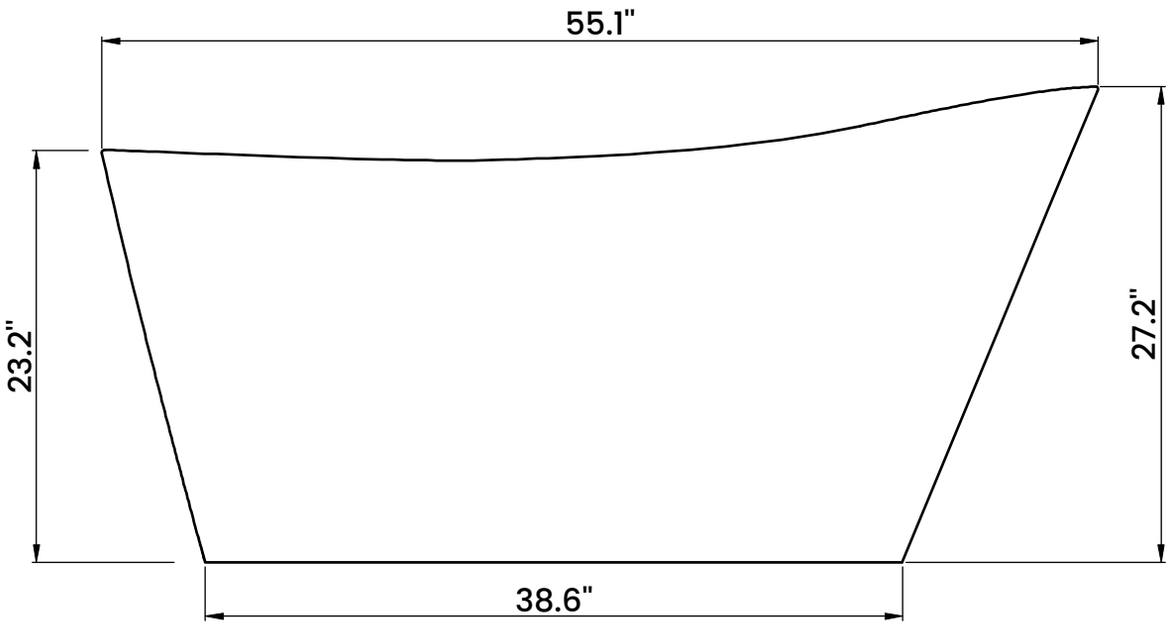

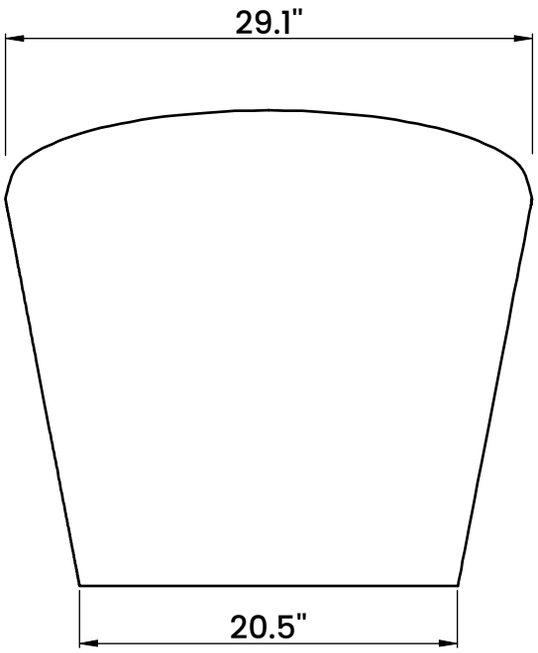

Model number:
G-115-416

DIMENSIONS
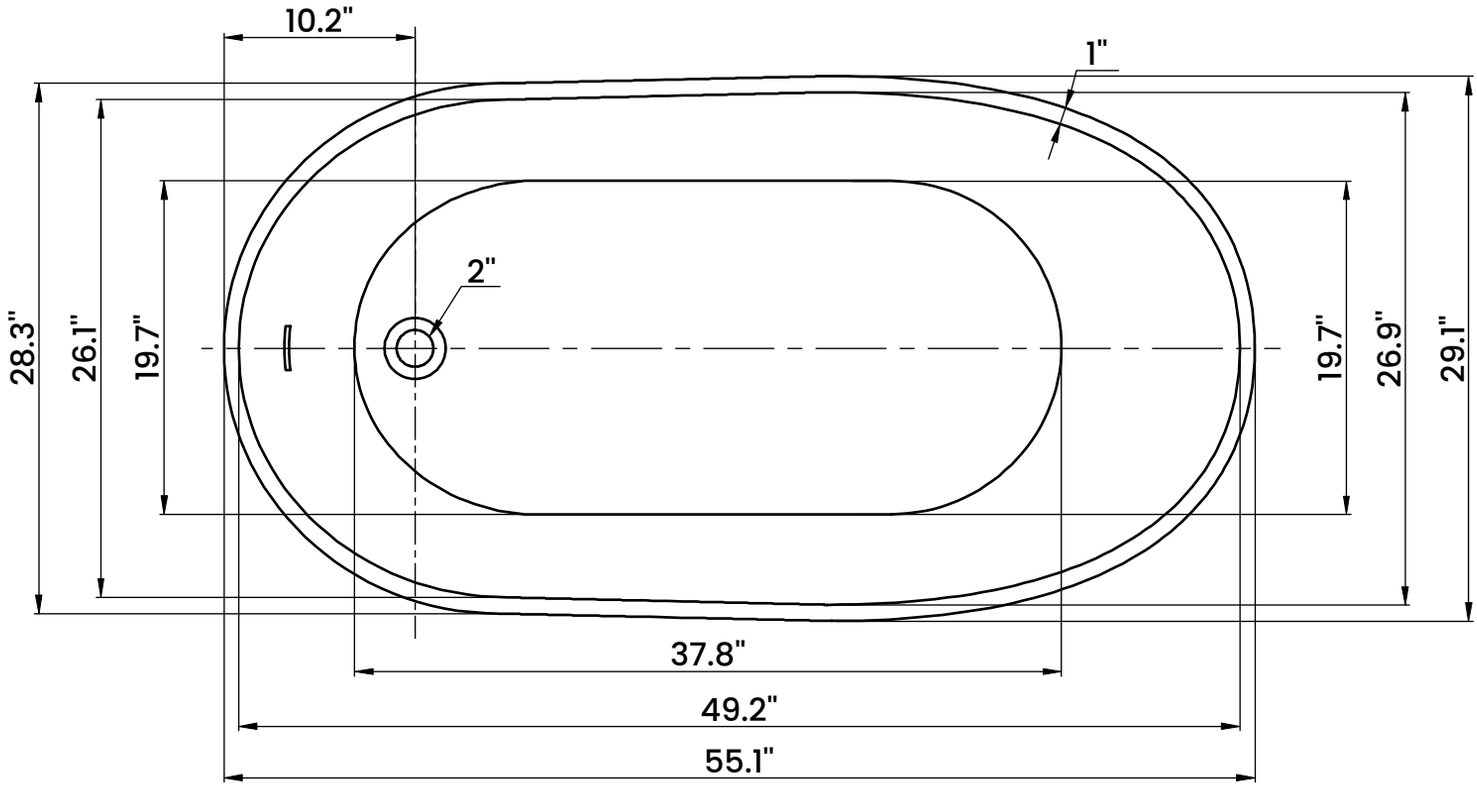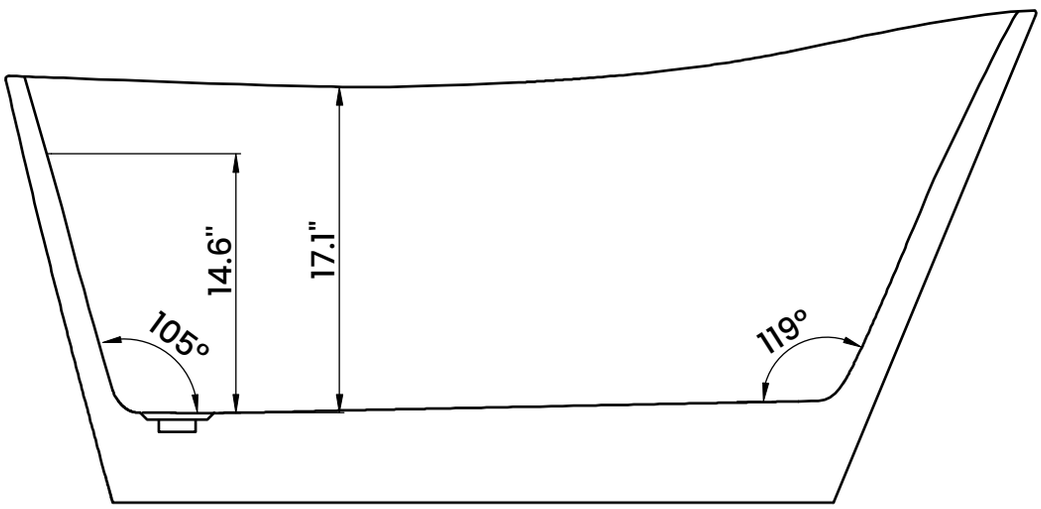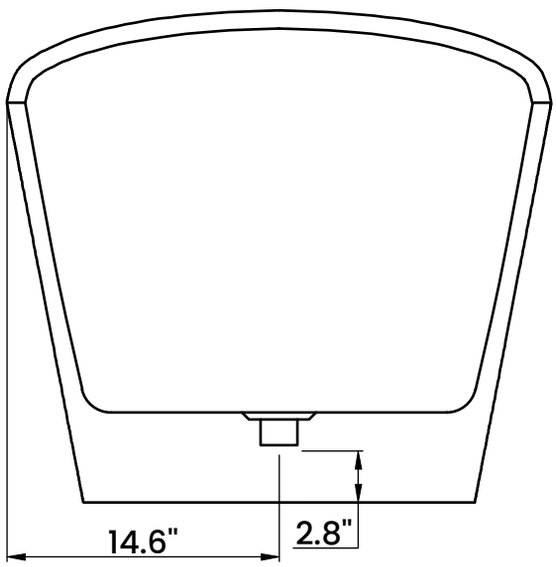
Streamline