WINGBACK HEADBOARD ASSEMBLY

Components

ITEM	DESCRIPTION	QTY
A	Headboard	1
B	Headboard Leg	2
C	Wing	2

Please note: actual product may look different than illustration.

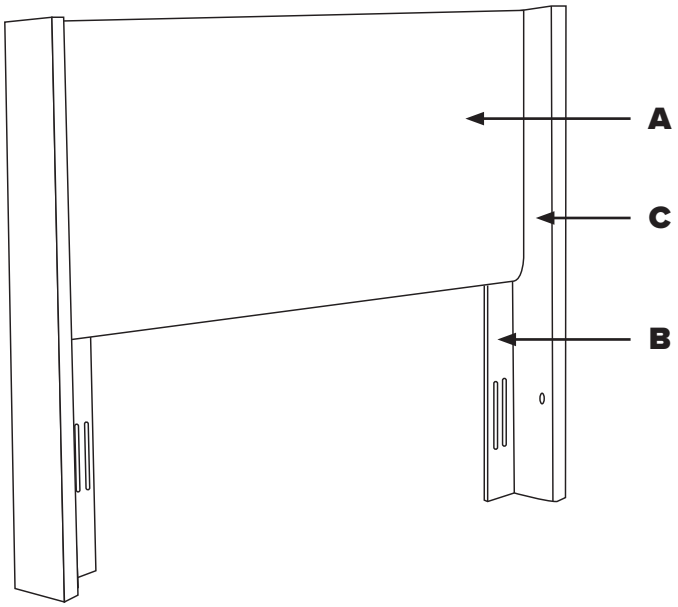

HARDWARE

(H1) x 4 — 5/8" x 5/16" bolt

(H2) x 20 — 1 1/4" washer

(H3) x 4 — 1" x 1/4" bolt

(H4) x 4 — 1/4" nuts

(H5) x 8 — 3" x 5/16" bolt

Please note: you will need a flat head screwdriver and a wrench to asseble your headboard. We recommend two people to complete this assembly.
We recommend two people to complete this assembly.

Step 1

1.1

Attach (C) wing to (A) headboard using (H5) bolts and (H2) washer. Tighten using flat head screwdriver.

Please note: Make sure the top of the (A) headboard is level with the top of the (C) wings before tightening.

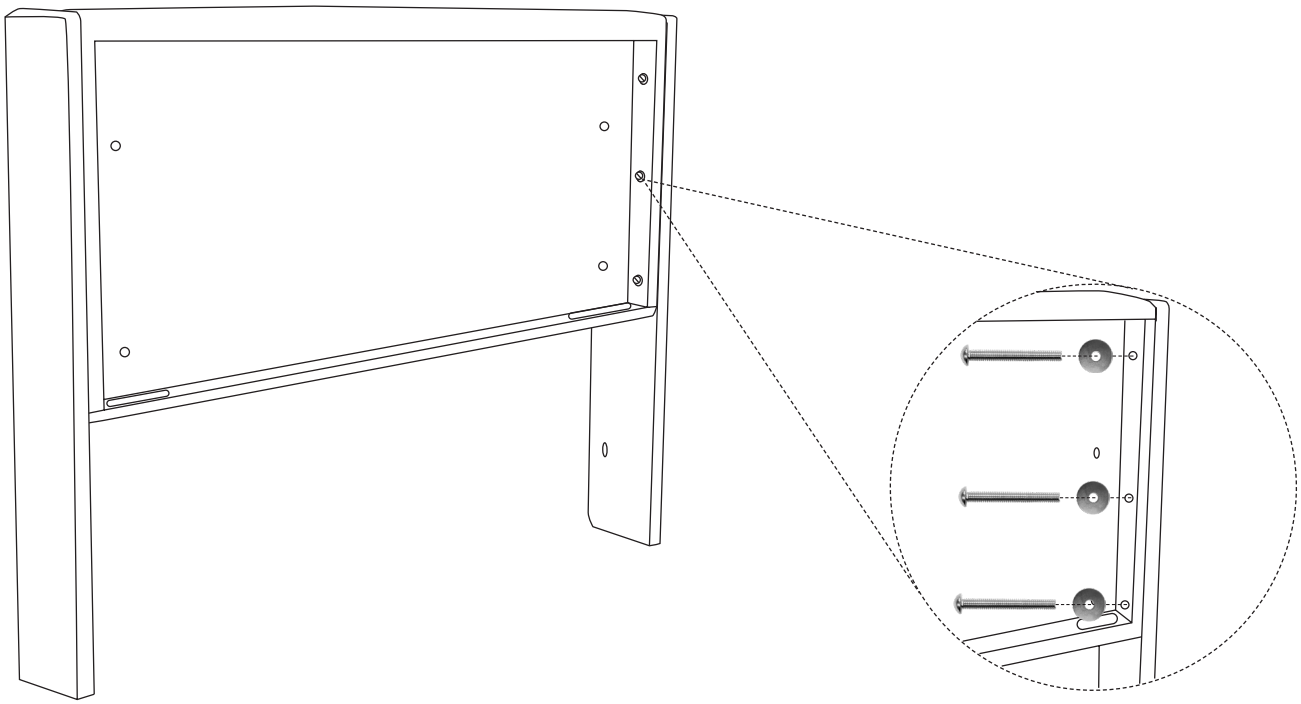

Step 2

2.1

Insert (B) headboard leg through hole of (A) headboard and align the slots with the holes.

2.2

Attach (B) headboard legs to (A) headboard using (H1) bolts and (H2) washers. Tighten with a flat head screwdriver.

Please note: Make sure the (B) headboard legs are flush with the ground before tightening.

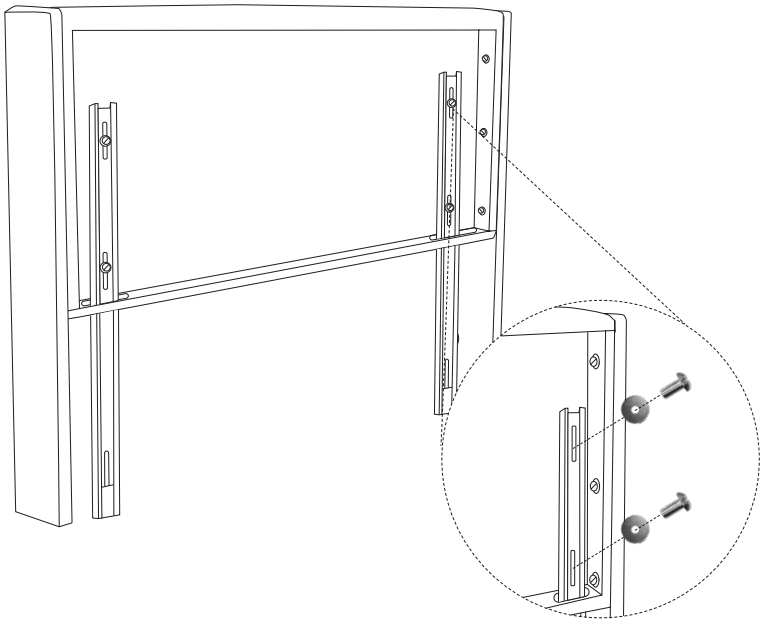

Step 3

3.1

Attach assembled headboard to your bed frame using (H3) bolts, (H2) washers and (H4) nuts. Tighten with a flat head screwdriver and wrench.

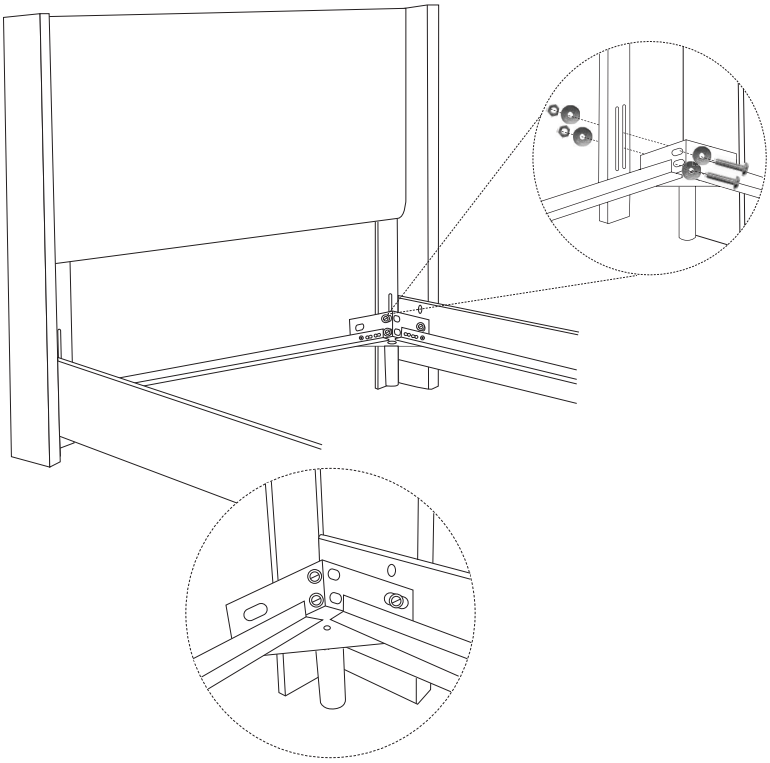

3.2 (OPTIONAL)

If you are assembling a complete upholstered bed, attach (C) headboard wings to upholstered bed frame using (H5) bolts and (H2) washers. If you are assembling a headboard only, ignore this step.

Warranty

LIMITED WARRANTY

The manufacturer guarantees its upholstered furniture against defects in construction for a period of one (1) year. When a structural defect is brought to our attention, we will repair or replace it at our option at no charge to the customer (includes parts and labor, not transportation costs). Fabric wearability for upholstered furniture is not covered by the warranty. Vacuum for regular cleaning.

Please dispose of plastic bag(s) and carton(s) responsibly.

LIMITE DE GARANTIA

El fabricante garantiza sus muebles tapizados contra defectos en construccion por un periodo de un (1) ano. Cuando un proble-ma de estructura es traido a nuestra atencion, nosotros repararemos o remplazaremos sin ningun cargo a nuestro cliente (incluye partes y trabajo, no costo en transportacion). Descol-oramiento del material de muebles tapizados no es cubierto por la garantia. Regularmente puede aspirar.

Por favor tirar bolsa(s) y caja(s) responsablemente.

GARANTIE LIMITÉE

Le fabricant garantit son meubles rembourrés contre les défauts de construction pour une durée d'un (1) an. Lorsqu'un défaut structurel est porté à notre attention, nous le réparerons ou le remplace-rons à notre discrétion sans frais pour le cli-ent (comprend les pièces et la main d'œuvre, pas les frais de transport). La portabilité du tissu pour les meubles rembourrés n'est pas couverte par la garantie. Passez l'aspirateur pour un nettoyage régulier.

Veuillez jeter le(s) sac(s) en plastique et le(s) carton(s) de manière responsable.