## Care Instructions



Be mindful of positioning your bed near air conditioners, heaters, or other heat sources. Extreme temperature changes may cause deformation, discoloration, cracking, or warping.

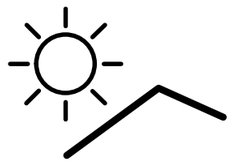

Avoid prolonged exposure to direct sunlight.



Always wipe up spills as soon as possible and dry with a soft cloth.



Use a soft, dry cloth that will not scratch the surface when dusting.

**Following these tips will help maintain your furniture's performance over time.**

# User Manual

Item No. BF0G-M-Q/BF0G-WN-Q

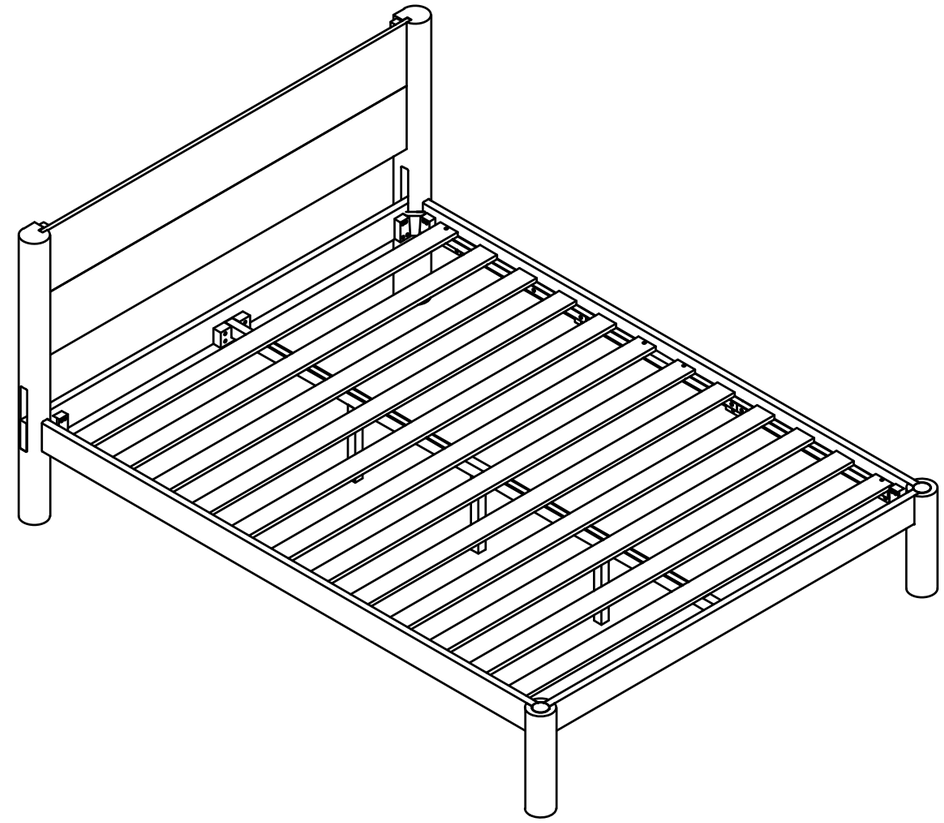

## Japanese Joinery Bed

INSTRUCTIONS - KEEP FOR FUTURE REFERENCE

**Thanks for choosing our Japanese Joinery Bed.**

This piece is built to bring simplicity, beauty, and timeless craftsmanship into your home.
No tools are required - each part is designed to fit naturally together.

## Before you Start ...

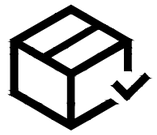

Ensure you have received all boxes



Read instructions carefully and check that all the parts are included. If anything is missing, please feel free to reach out - we'll promptly send replacements or provide any help you need.



Clear out the space where your bed will go. We recommend protecting your floor with a mat or cardboard to avoid scratches during the assembly process.



Please keep children safely away while assembling



# Parts list

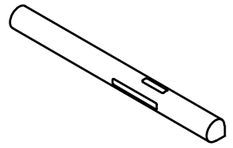

1L x1pc

Headboard Left Leg

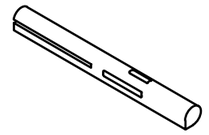

1R x1pc

Headboard Right Leg



2 x2pcs

Footboard Legs



3 x1pc

Bottom Board

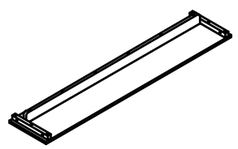

4 x1pc

Top Board

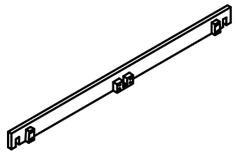

5 x1pc

Top Short Rail

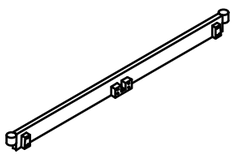

6 x1pc

Back Short Rail

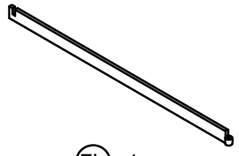

7L x1pc

Long Rail Left



7R x1pc

Long Rail Right



8 x1pc

Support Bar

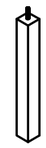

9 x3pcs

Support Legs

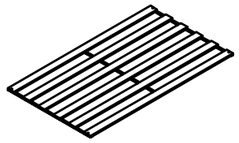

10 x2pcs

Slats

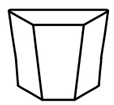

11 x4pcs

Wooden Wedges

# Hardware list



A x8pcs

Hand Screws:
1/4"*40



B x2pcs

Hand Screws:
1/4"*30

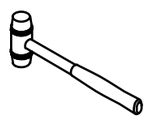

C x1pc

Rubber Mallet
30*80*250

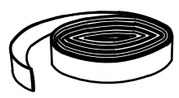

D

Adhesive Felt

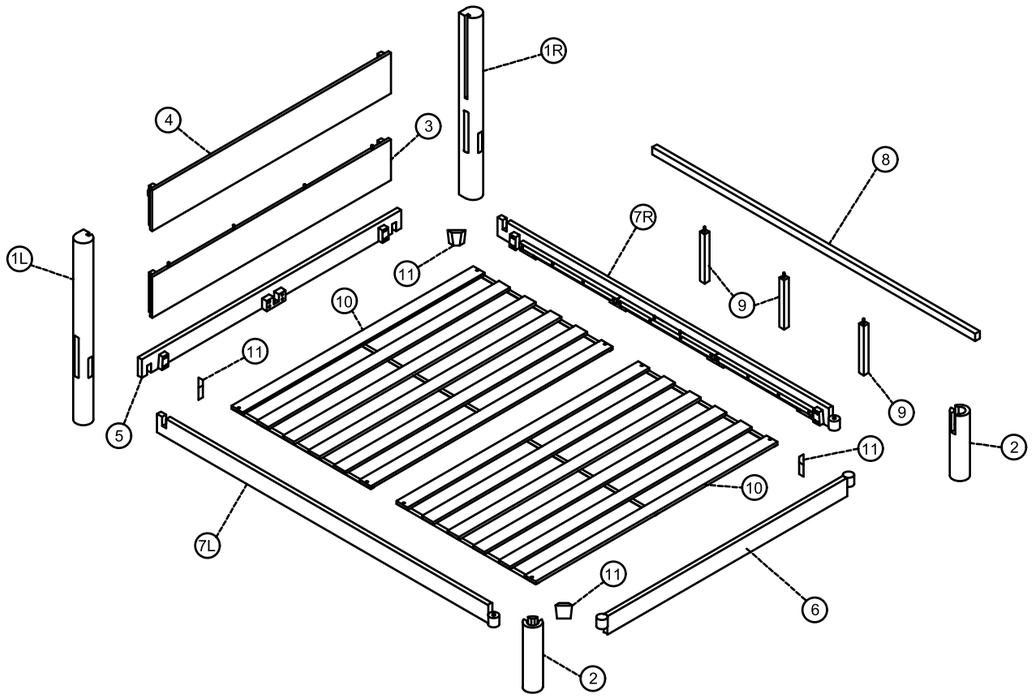


## Assembly Instructions

### Step 1

Insert the long rails into the headboard legs, "U" joint facing up.

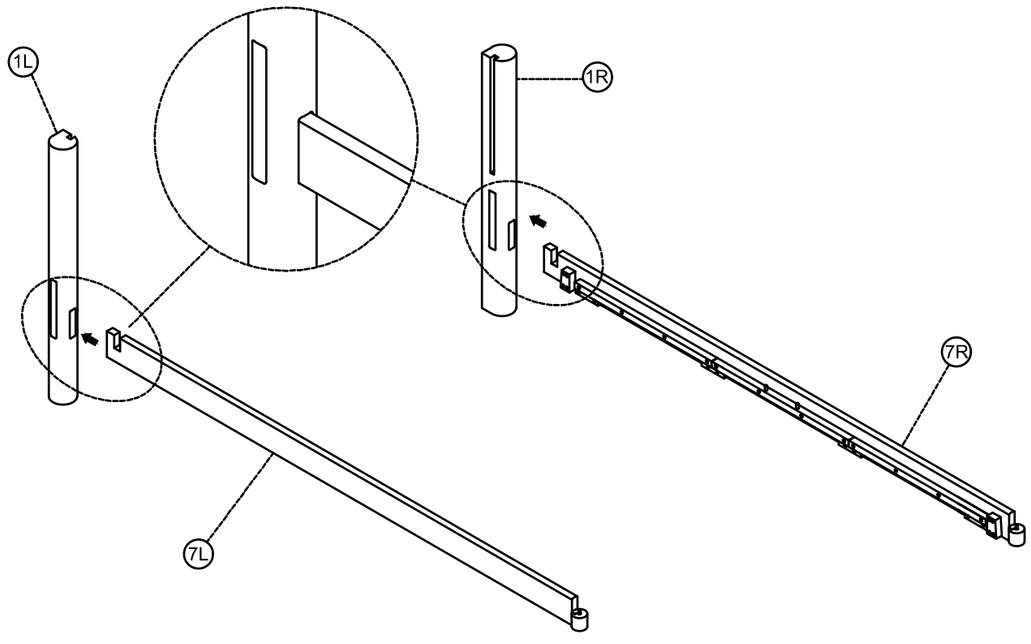




### Step 2

Insert the top short rail into the headboard legs, "U" joint facing down.

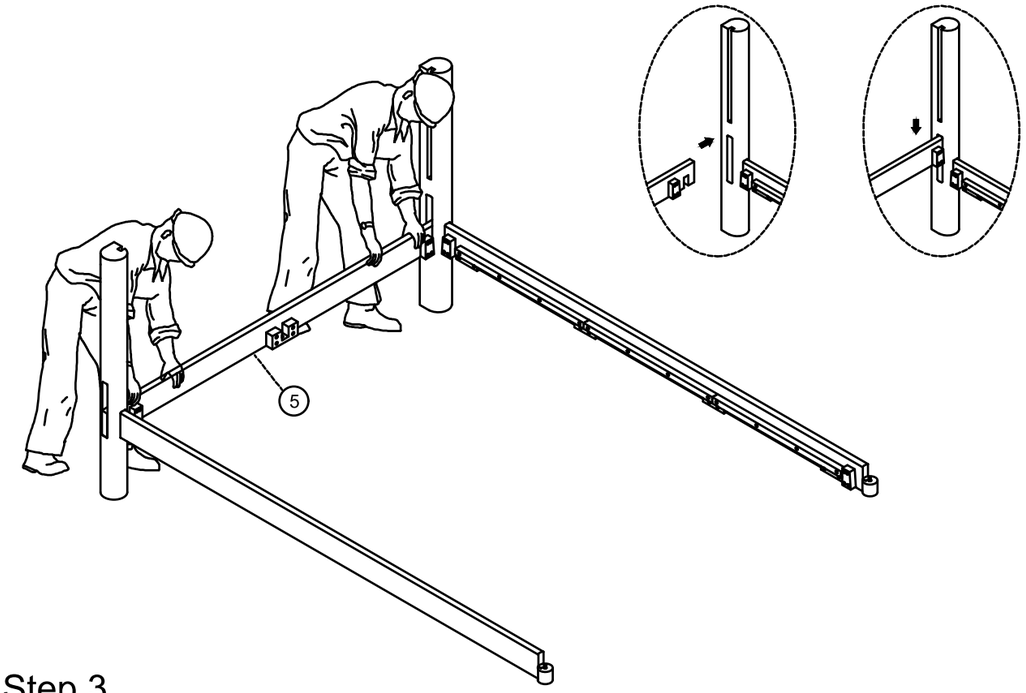


### Step 3

Insert the long rails into the footboard legs.

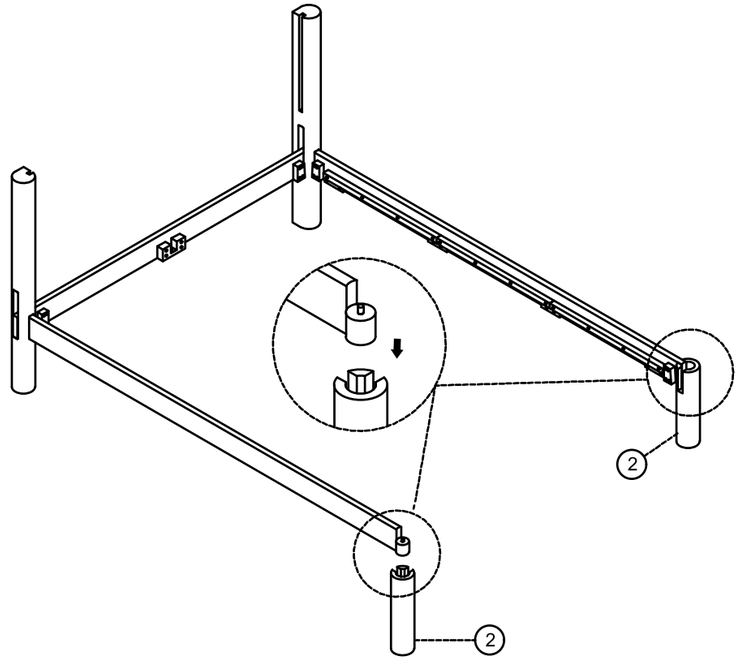

## Step 4

Insert the back short rail into the footboard legs.

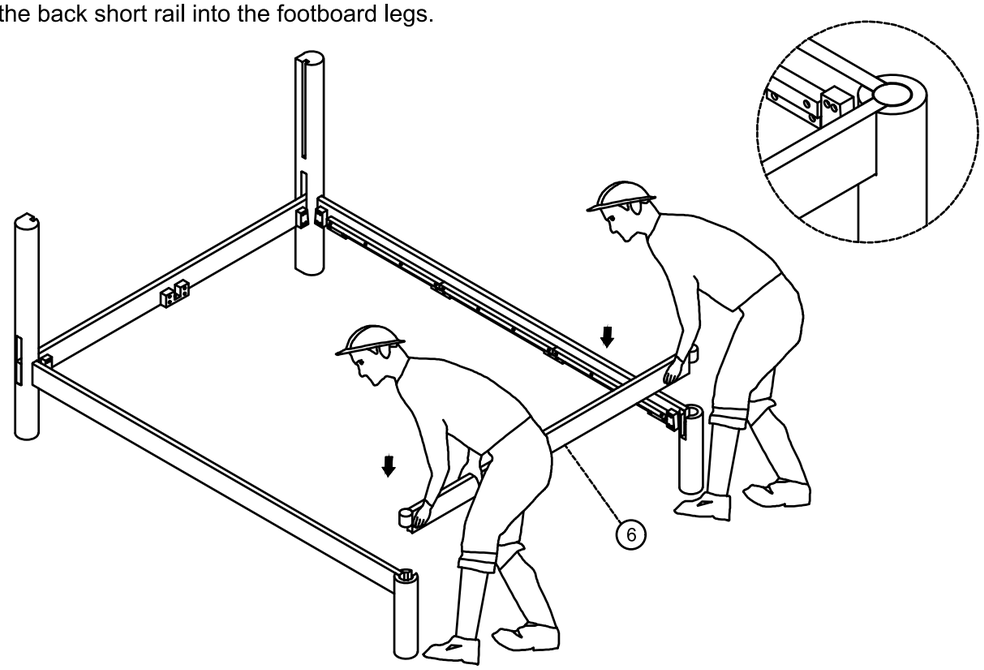


## Step 5

Insert the bottom board. Fix it in place using hand screws (A), but do not fully tighten them yet.

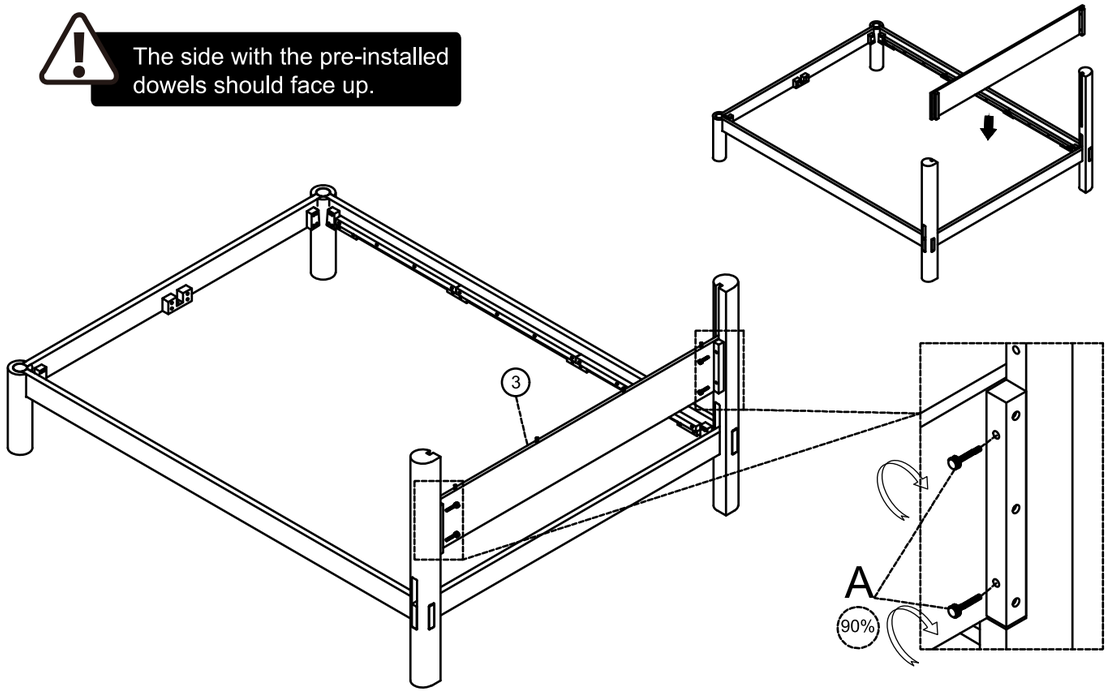




## Step 6

Insert the top board and align it with the pre-installed dowels on the bottom board.

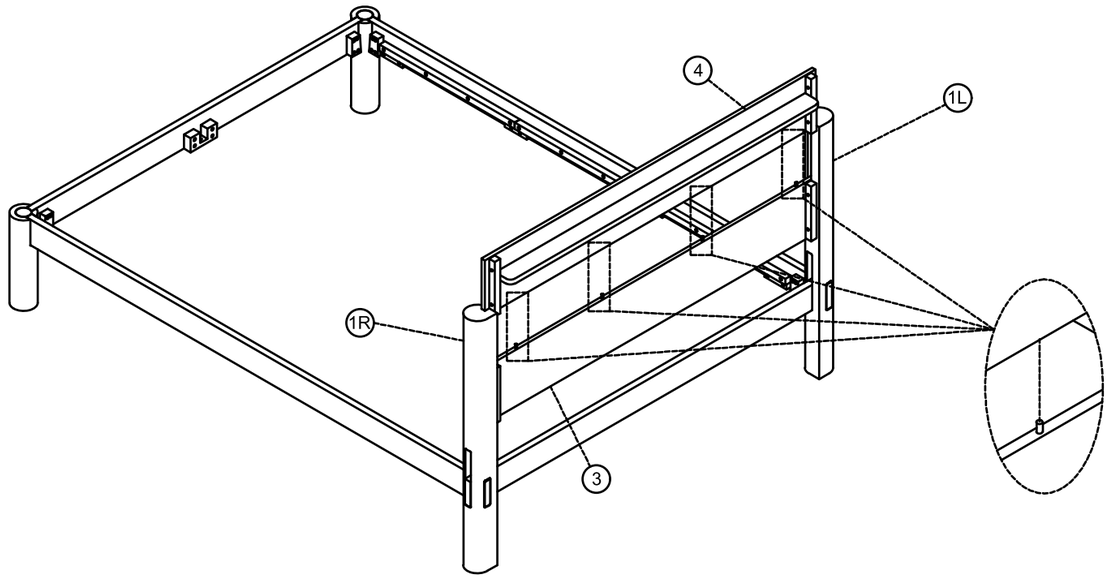


## Step 7

Secure the top board with two hand screws (A) on each side. After confirming that the top board and bottom board are properly aligned and squared, fully tighten all screws (A).

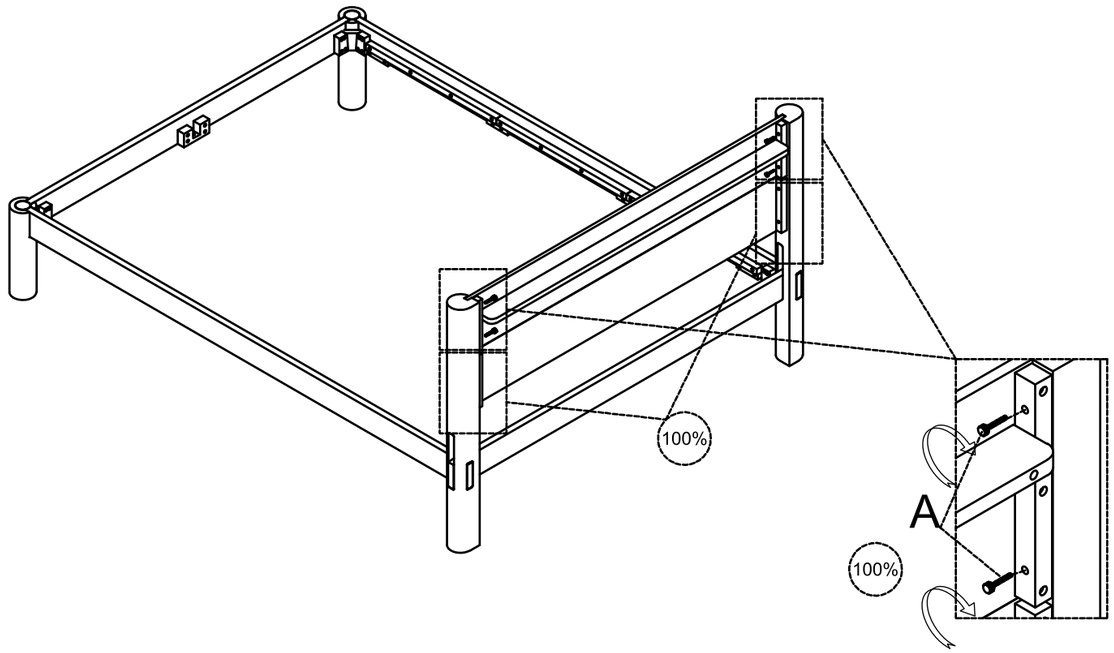

## Step 8

Screw the support legs into the support bar.

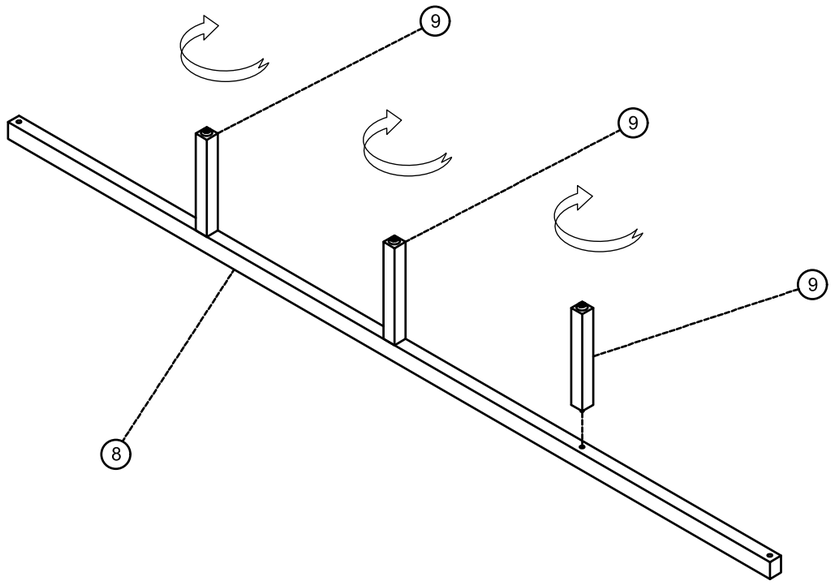


## Step 9

Align the support bar with the reserved slots at the head and foot of the bed frame, then secure it from underneath with hand screws (B) for stability.

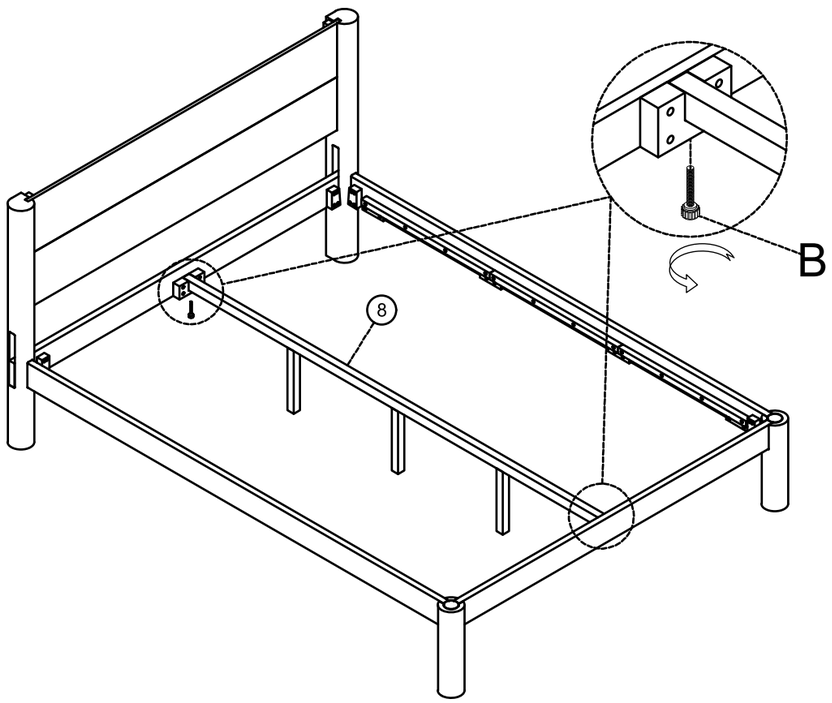




## Step 10

Adjust the leveling feet of the support legs so that the support bar is even and flush with the bed frame.

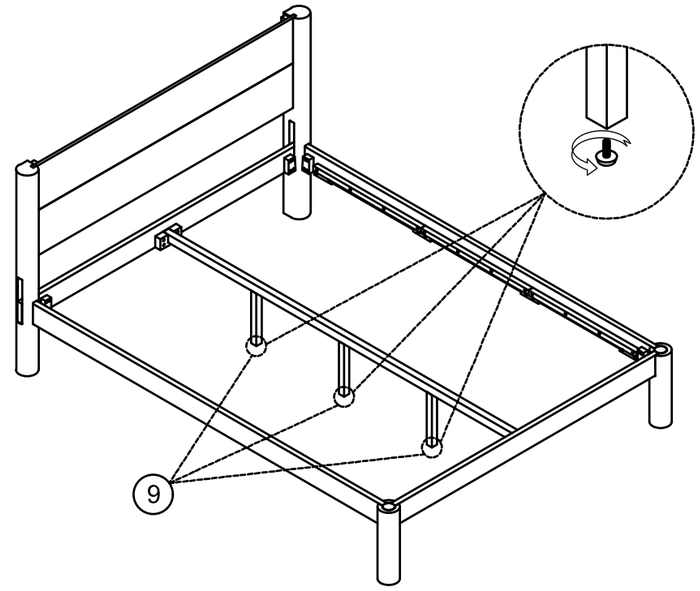


## Step 11

Place the slats evenly across the bed frame. Make sure the slats are aligned with the wooden dowels on the side rails.

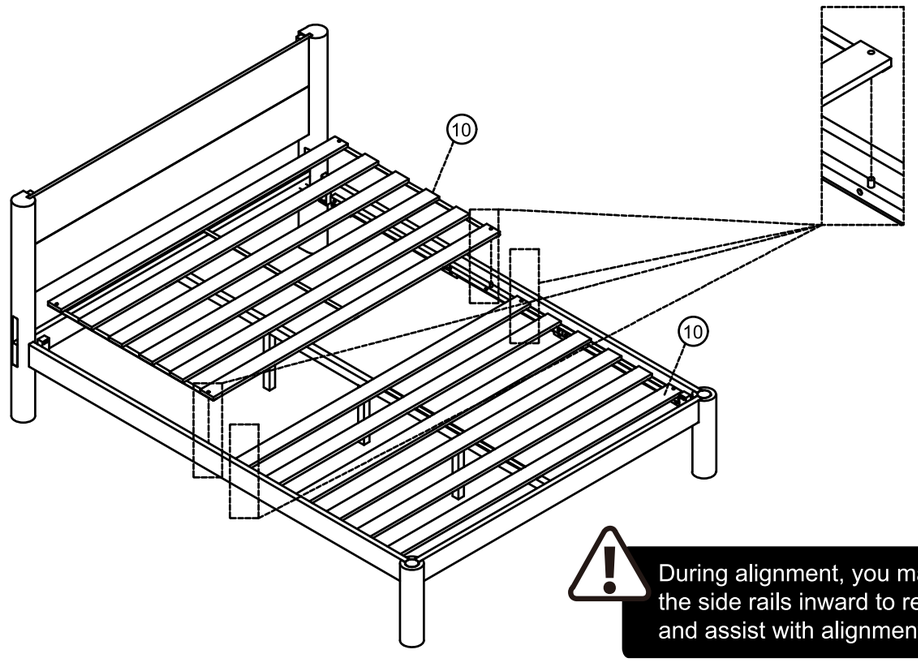


During alignment, you may gently push the side rails inward to reduce the gap and assist with alignment.

## Step 12

Press the wooden wedges firmly into place using the rubber mallet (C) fora snug fit.

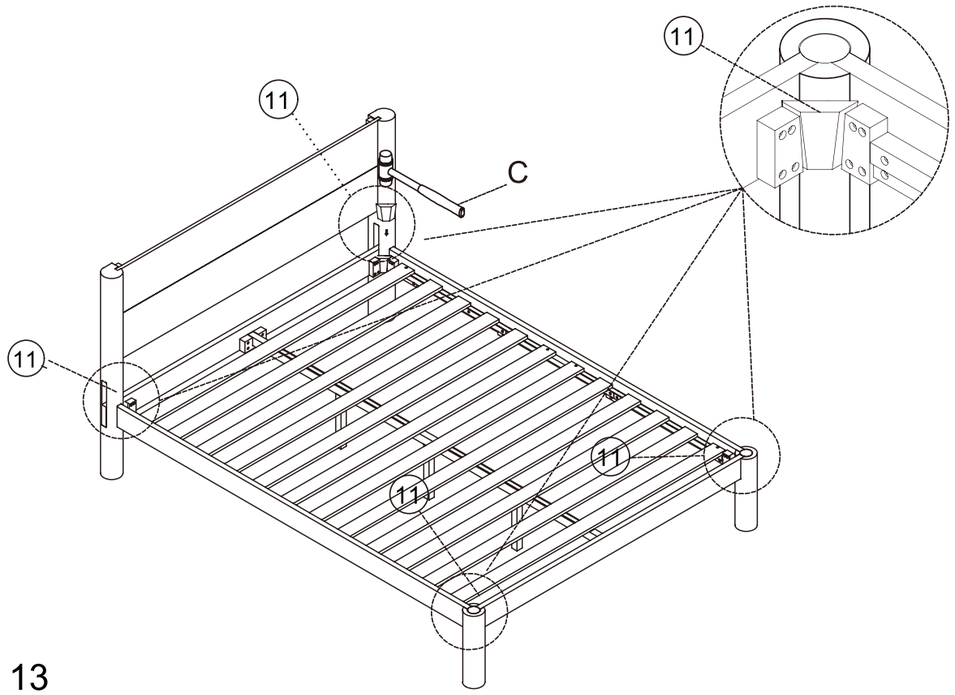


## Step 13

Self-adhesive felt fabric easily sticks to the back to prevent the bed from directly contacting the wall, avoiding scratches.

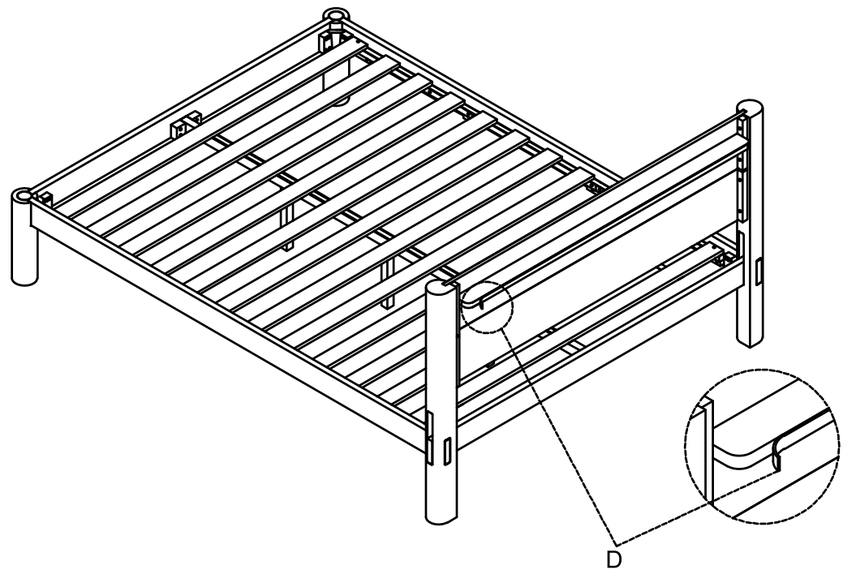




## Assembly Complete - Important Final Check

Before using the bed frame, please carefully confirm the following:

· The hand-tightened screws in Step 6, Step 7 and Step 9 are fully tightened.

· The support bar levelers in Step 10 are properly adjusted to firmly contact the floor, ensuring overall stability.

· The wooden wedges in Step 12 at all four corners are correctly popsitioned and securely fixed.

