Parts List For Bed

BED CARTON

(10) HEADBOARD PANEL
(11) FOOTBOARD PANEL

HARDWARE BAG FOR BED ATTACHMENT TO FRAME

(1) 1/4-20 X 3 1/4" COUNTER SUNK ALLEN HEAD SCREW-4
(2) 1/4-20 X 1" FLAT ALLEN HEAD SCREW-4
(3) 1/4-20 X 3/4" FLAT ALLEN HEAD SCREW-4
(4) 1/4-20 HEX NUT-4
(5) 1/4" ID X 5/8" OD FLAT METAL WASHER-12
(6) 1/4" METAL SPRING WASHER-8
(7) 4MM ALLEN WRENCH-1
(8) 10MM OPEN WRENCH-1

(9) LEG EXTENSION-2

HEADBOARD CARTON

(10) HEADBOARD PANEL

HARDWARE BAG FOR HEADBOARD ATTACHMENT TO FRAME

(1) 1/4-20 X 3 1/4" COUNTER SUNK ALLEN HEAD SCREW-4
(3) 1/4-20 X 3/4" FLAT ALLEN HEAD SCREW-4
(4) 1/4-20 HEX NUT-4
(5) 1/4" X 5/8" OD FLAT METAL WASHER-8
(6) 1/4" METAL SPRING WASHER-4
(7) 4MM ALLEN WRENCH-1
(8) 10MM OPEN WRENCH-1

(9) LEG EXTENSION-2

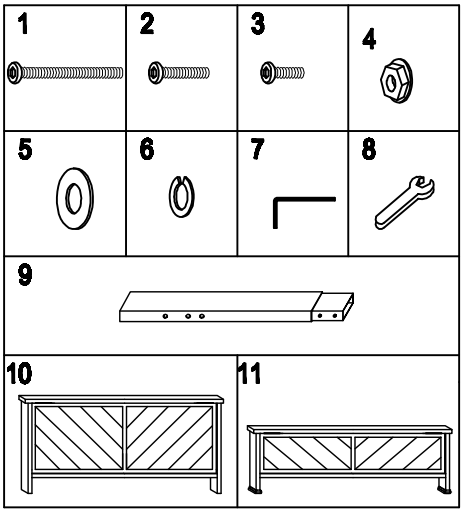

SAVE ALL PACKAGING MATERIALS UNTIL PRODUCT IS FULLY ASSEMBLED. HARDWARE AND SMALL PIECES MAY NOT BE SEEN AND COULD BE ACCIDENTALLY DISCARDED WITH PACKAGING MATERIALS.

PRODUCT FULLY ASSEMBLED

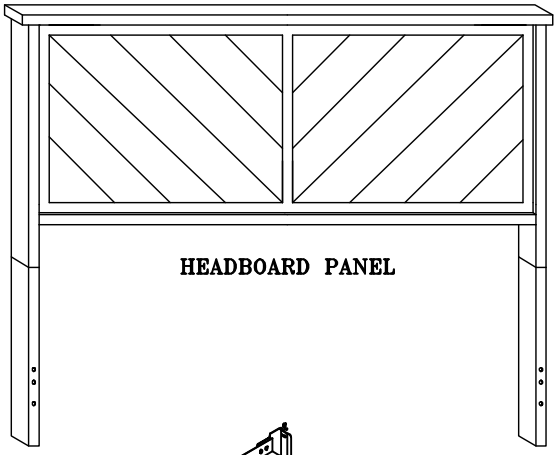

HEADBOARD PANEL

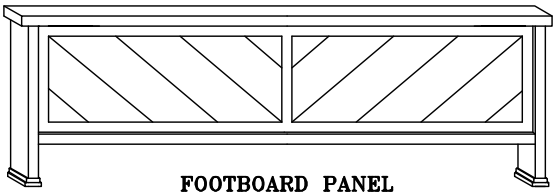

FOOTBOARD PANEL

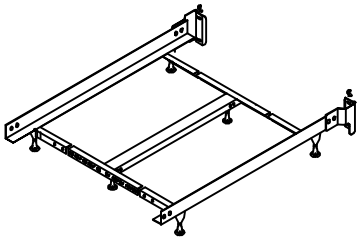

QUEEN – KING HEADBOARD ONLY FRAME FULLY ASSEMBLED FRAMES

NOTE: SEE INSTRUCTIONS INCLUDED IN FRAME CARTON FOR FRAME ASSEMBLY

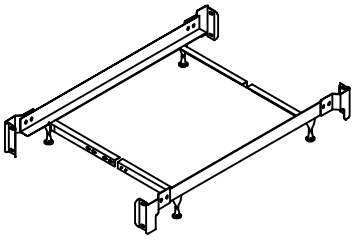

TWIN – FULL BED FRAME FULLY ASSEMBLED

NOTE: SEE INSTRUCTIONS INCLUDED IN FRAME CARTON FOR FRAME ASSEMBLY

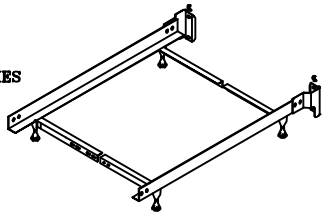

TWIN – FULL HEADBOARD ONLY FRAME FULLY ASSEMBLED

NOTE: SEE INSTRUCTIONS INCLUDED IN FRAME CARTON FOR FRAME ASSEMBLY

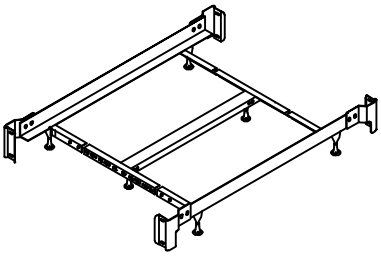

QUEEN – KING BED FRAME FULLY ASSEMBLED

NOTE: SEE INSTRUCTIONS INCLUDED IN FRAME CARTON FOR FRAME ASSEMBLY

FOR ASSISTANCE IN ASSEMBLY ONLY OF THIS PRODUCT. CALL OUR HELP DESK . PLEASE HAVE THE STYLE NUMBER AVAILABLE BEFORE YOU CALL. (STYLE # OR NAME CAN BE FOUND ON PACKING CARTON OR SALES RECEIPT.)
OUR PRODUCT IS INSPECTED TO ENSURE IT IS IN GOOD CONDITION. IF YOUR FURNITURE APPEARS TO HAVE BEEN DAMAGED IN SHIPMENT OR YOU ARE IN NEED OF REPLACEMENT PARTS PLEASE CONTACT THE DEALER FROM WHOM YOU PURCHASED THE PRODUCT.

Instruction Sheet

FIGURE 1

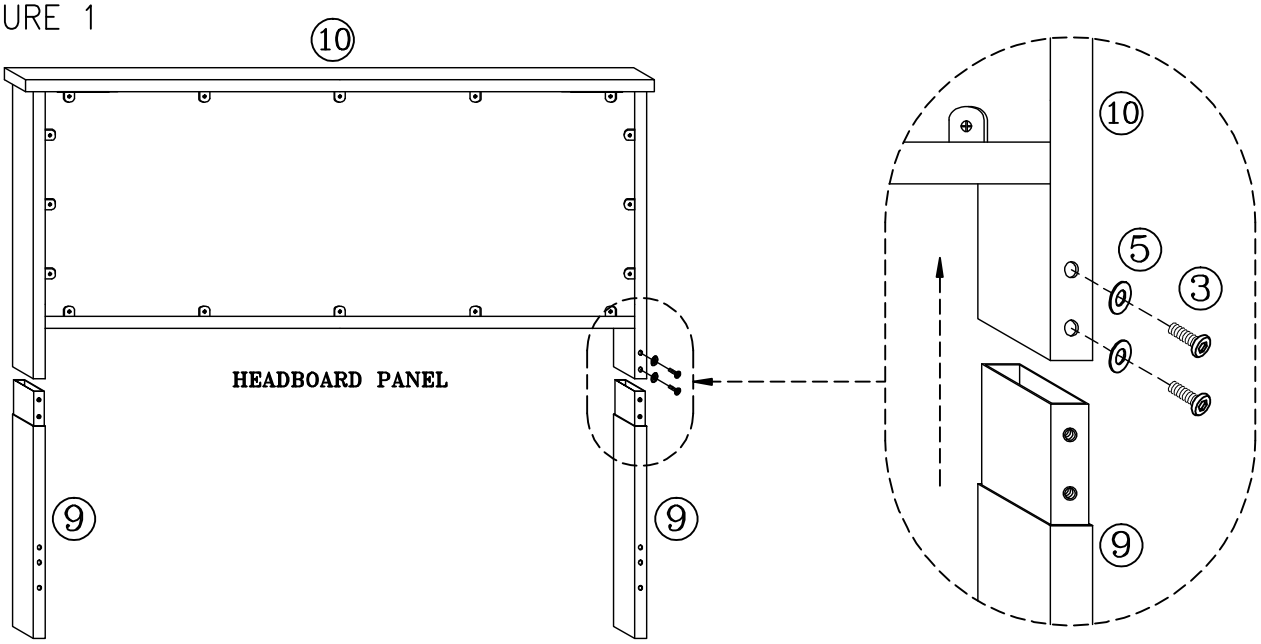

FIGURE 2

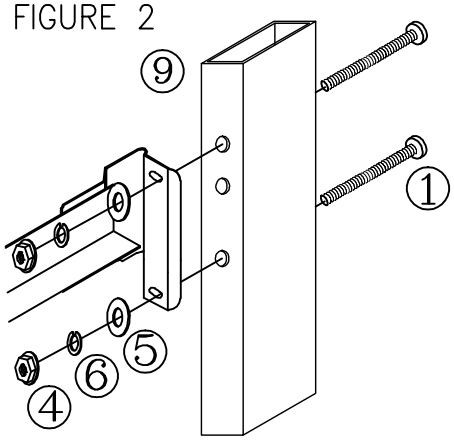

FIGURE 3

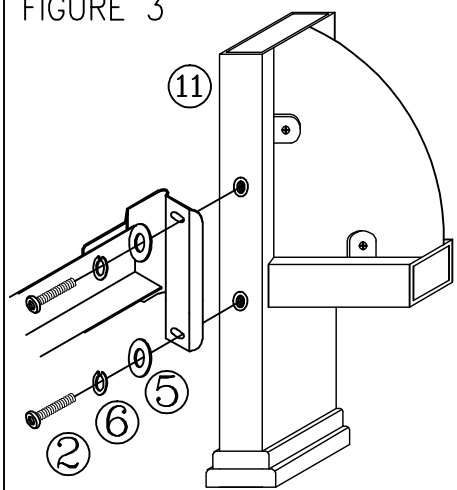

Step 1

- Align top reduction of leg extension (9) with bottom of headboard panel (10) posts . (SEE FIGURE 1)
- Now carefully insert leg extension (9) into bottom of headboard panel (10) post.
- Secure leg extension with screw (3) and flat metal washer (5). Use Allen Wrench (7).

Step 2

- Place headboard and frame in desired location in room.
- Place 2 screws (1) through holes located in leg (9).(SEE FIGURE 2)
- Align bed frame bracket over screws.
- Place a flat metal washer (5), spring washer (6) and hex nut (4) over on each screw. Hand tighten. DO NOT TIGHTEN screws all the way. (SEE FIGURE 2)
- Repeat on other side of headboard.
- Tighten all screws securely using the Allen wrench (7) and open wrench (8).

Step 3

- Position footboard panel (11) and align holes in the post with holes in the frame bracket. (SEE FIGURE 3)
- Place a lock washer (6) and flat metal washer (5) over on each screw (2). Insert through bracket and into post. Hand tighten. DO NOT TIGHTEN screws all the way.
- Repeat on other side of footboard panel.
- Tighten all screws securely using the Allen wrench (7).