ASSEMBLY INSTRUCTION

CHAIR

NOTE: Do not use power tools for assembly. The use of power tools increases the risk of over-tightening, which can result in wood splitting or cracking.

TOOLS REQUIRED : NO TOOLS REQUIRED			
NO.	DRAWING	QTY	DESCRIPTION
A		1	CHAIR BASE
B	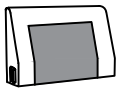	1	BACK REST
C		1	SEAT CUSHION
D	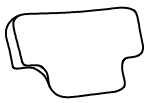	1	BACK CUSHION

HARDWARE LIST			
NO.	DRAWING	QTY	DESCRIPTION
1	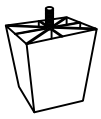	4	PLASTIC LEGS (8CM)
2		4	WASHERS (∅4.7CM)

STEP 1

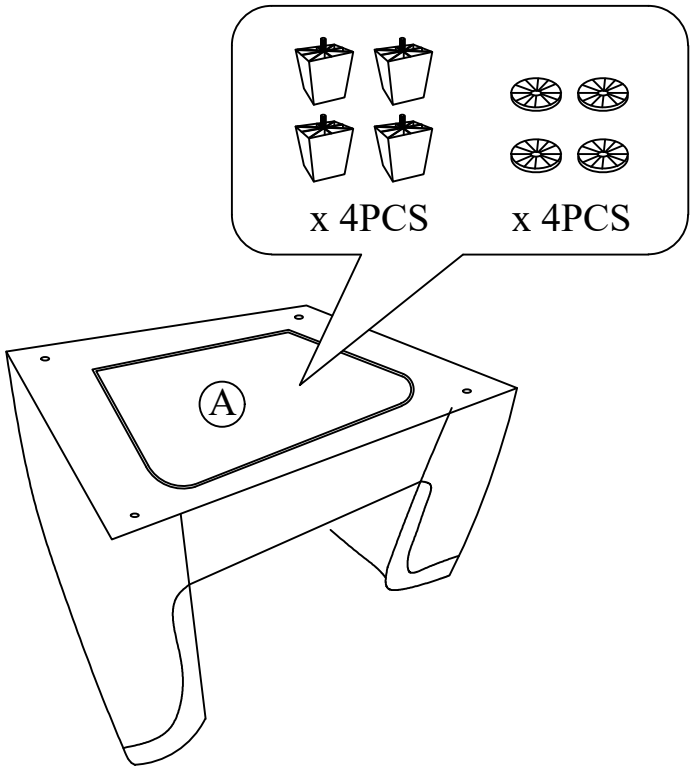

STEP 2

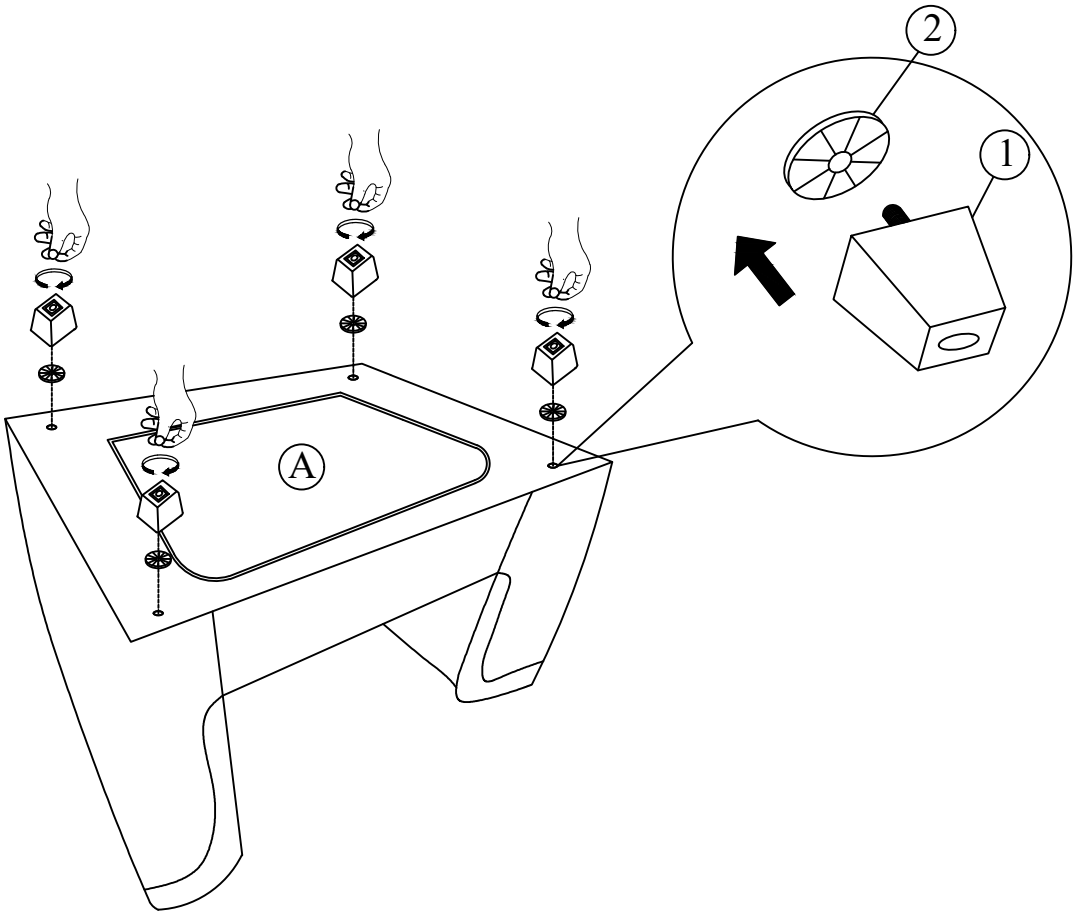

STEP 3

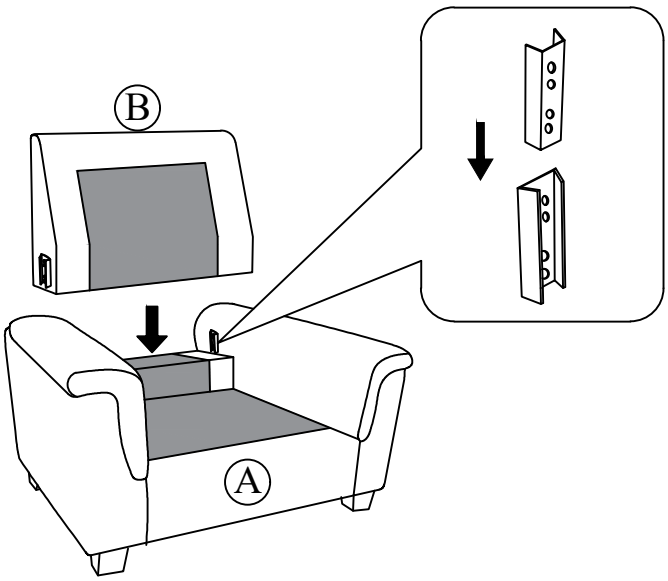

STEP 4

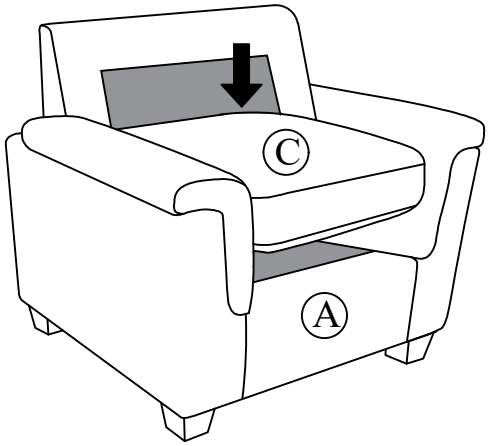

STEP 5

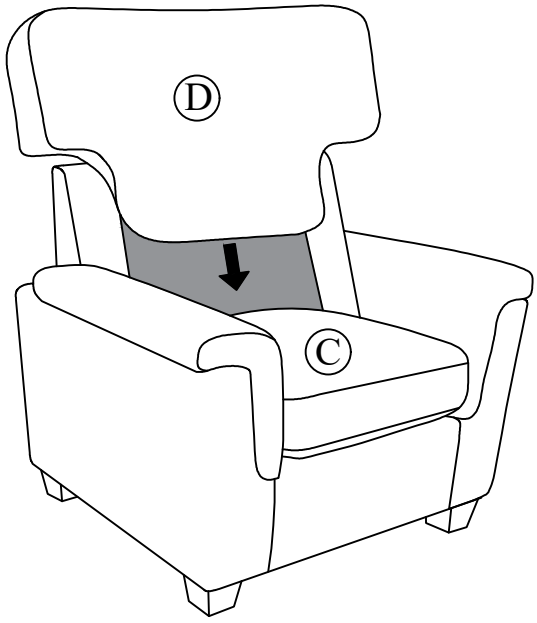

COMPLETED

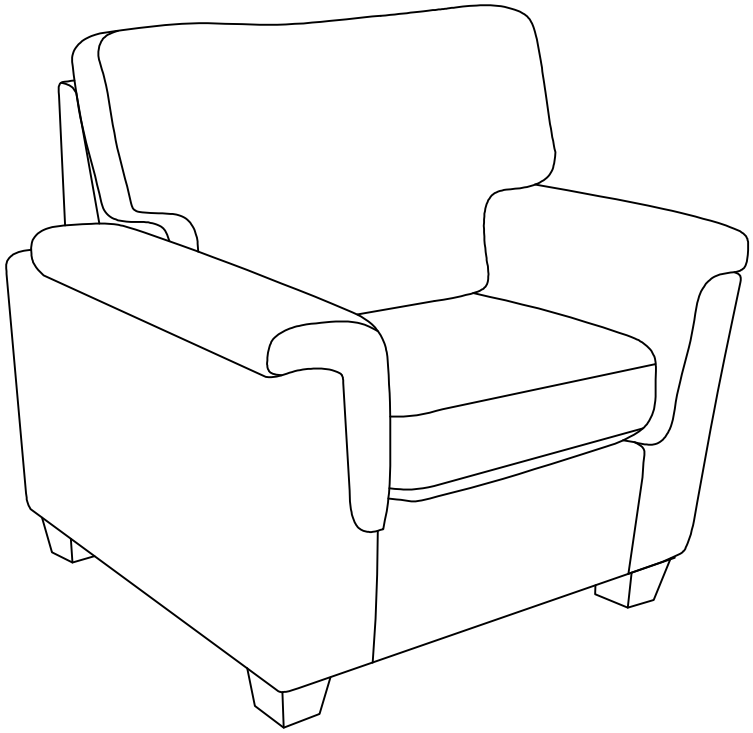

Care Instruction for Chenille Furniture.
In order to maintain the original appearance of your Chenille furniture, please follow below simple care procedures:

- Avoid exposing furniture directly to sunlight or heating and air conditioning outlets. Sunlight and/or exposure to heating and air conditioning outlets will fade/damage Chenille.
- Do not place your Chenille furniture too close to windows, radiators, or vents.
- Vacuum or wipe with a soft brush to remove dust.
- Hardware may loosen over time. Periodically check to make sure all connection are tight, Re-tighten if necessary.

⚠ **For items use on wooden floor, hard surfaces or carpets, it is recommended to install protective pads under all legs and supports to avoid/prevent from damages/scratches and discoloration.**