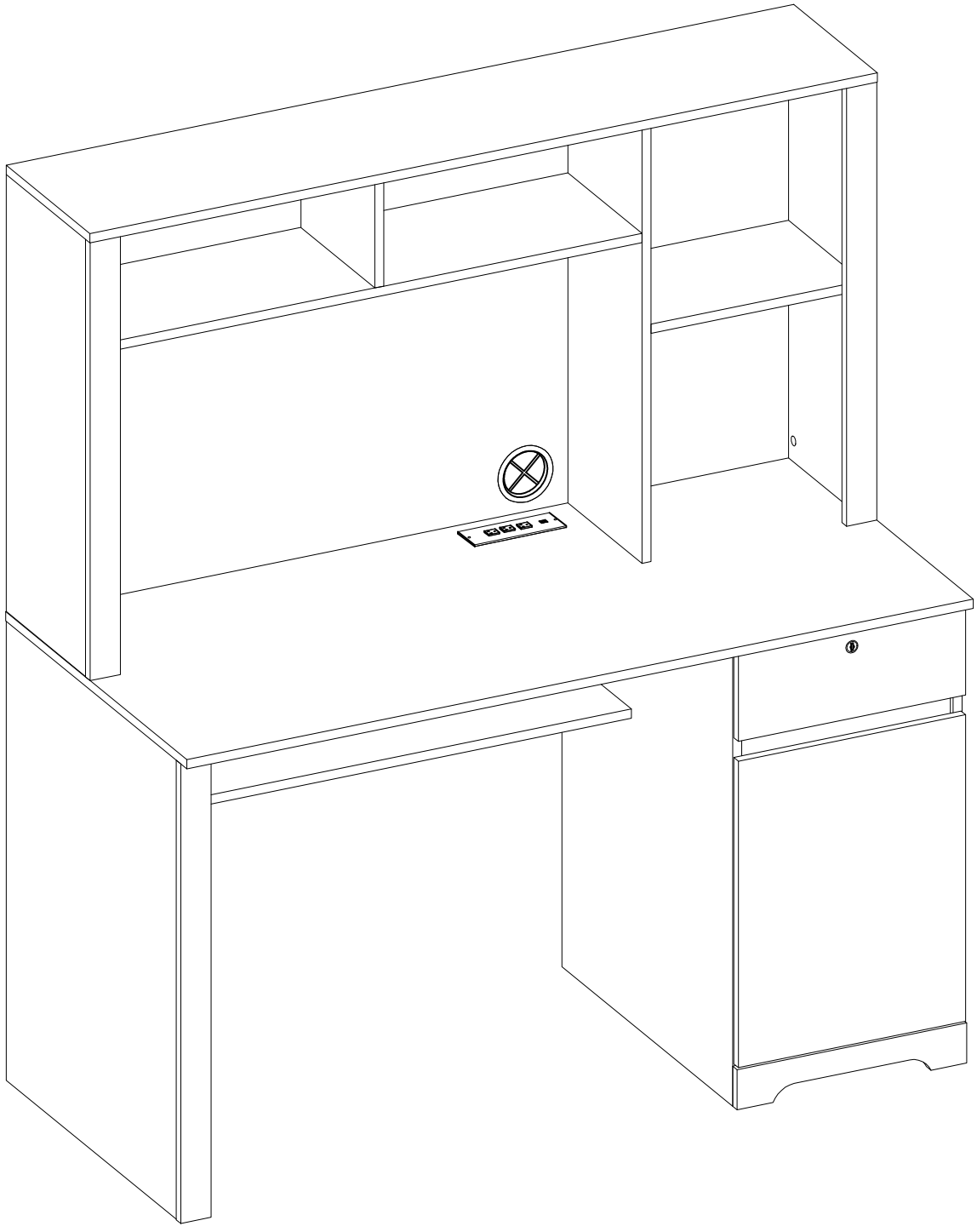

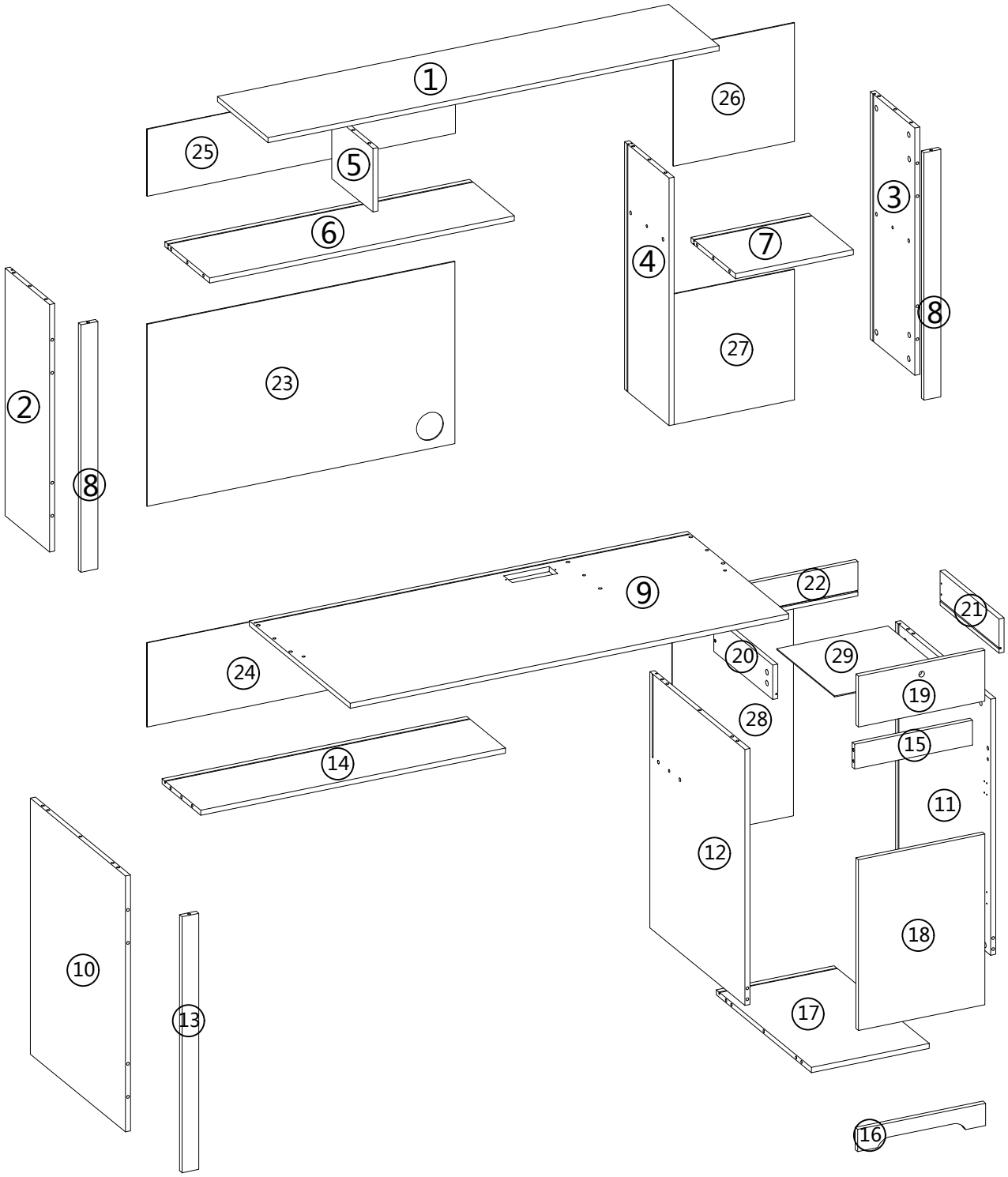
1
26
25
5
6
4
7
3
8
27
2
23
8
9
22
21
24
20
29
19
28
15
14
11
12
18
10
13
17
16

1

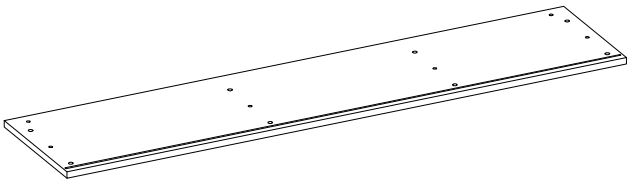

1302*300*15mm 1 PC

2

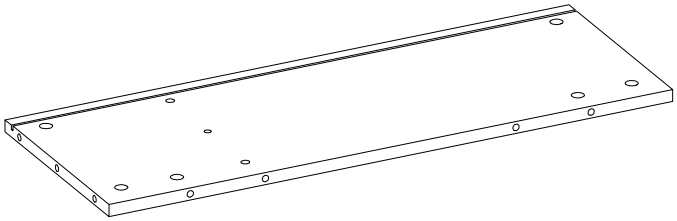

720*265*15mm 1 PC

3

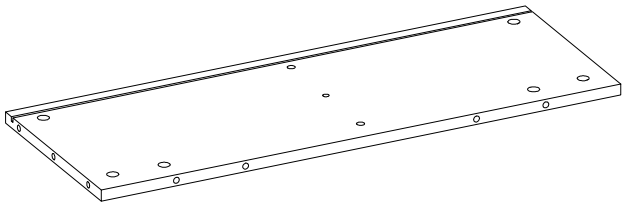

720*265*15mm 1 PC

4

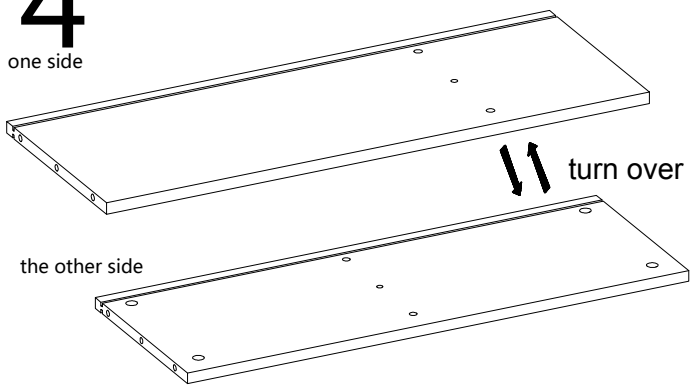

720*265*15mm 1 PC

5

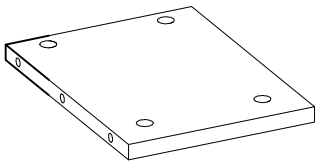

185*244*15mm 1 PC

6

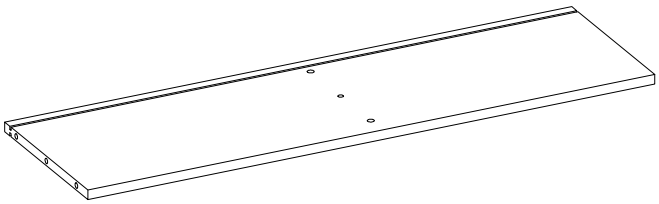

905*265*15mm 1 PC

7

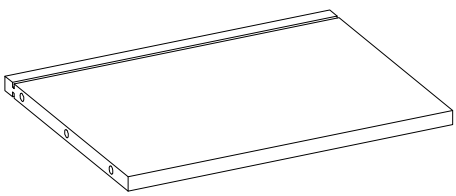

350*265*15mm 1 PC

8

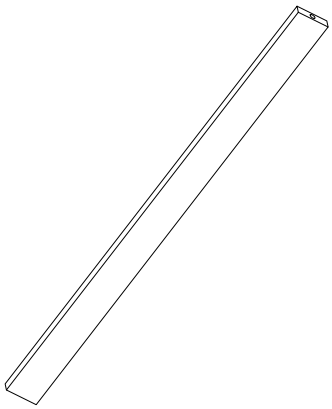

720*50*15mm 2 PCS

9

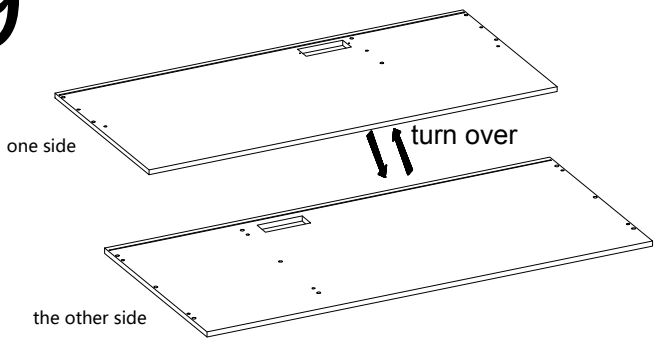

1302*600*15mm 1 PC

10

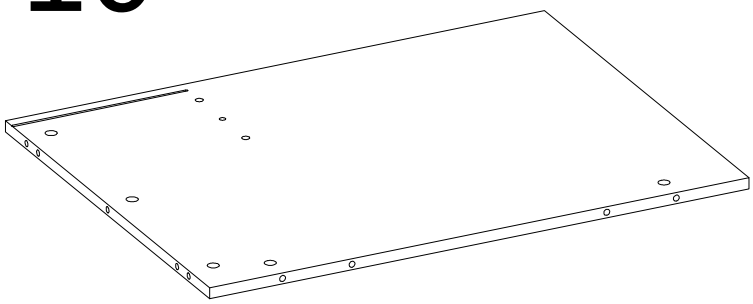

745*565*15mm 1 PC

11

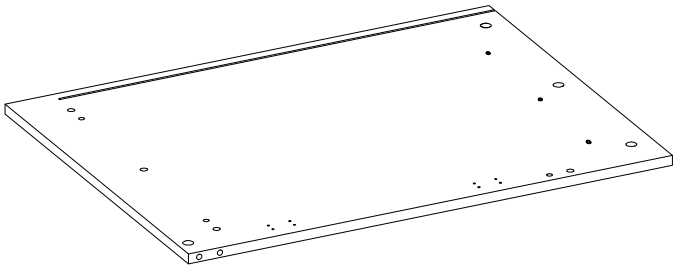

745*565*15mm 1 PC

12

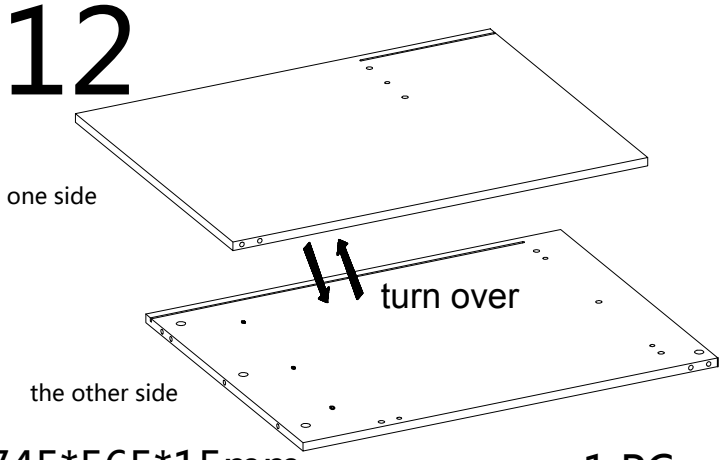

745*565*15mm 1 PC

13

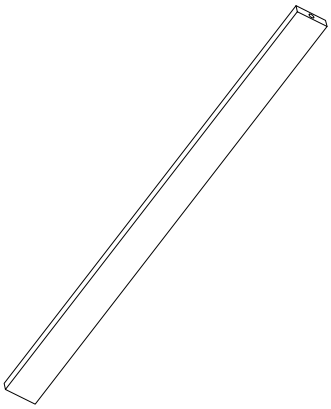

745*50*15mm 1 PC

14

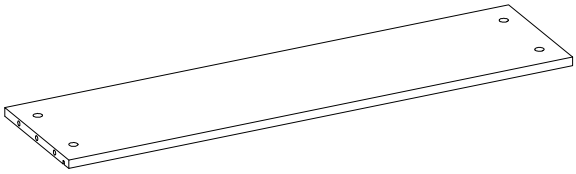

905*230*15mm 1 PC

15

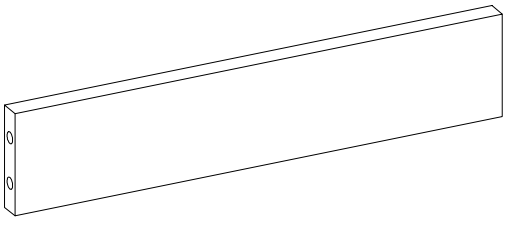

350*72*15mm 1 PC

16

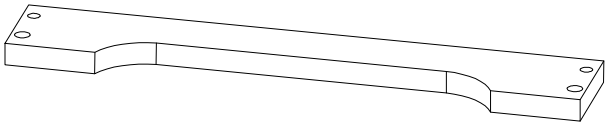

380*80*15mm 1 PC

17

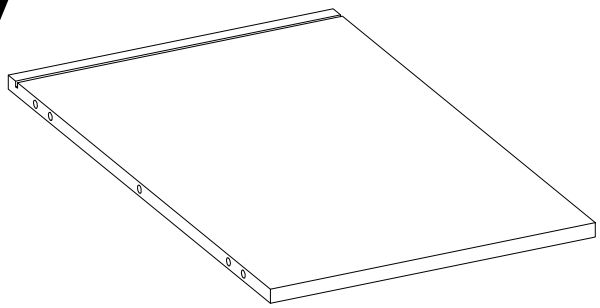

350*565*15mm 1 PC

18

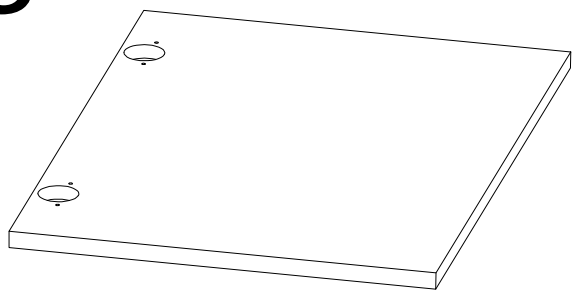

482*376*15mm 1 PC

19

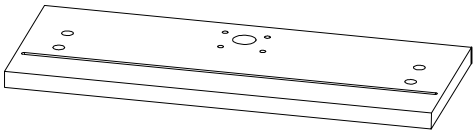

376*148*15mm 1 PC

20

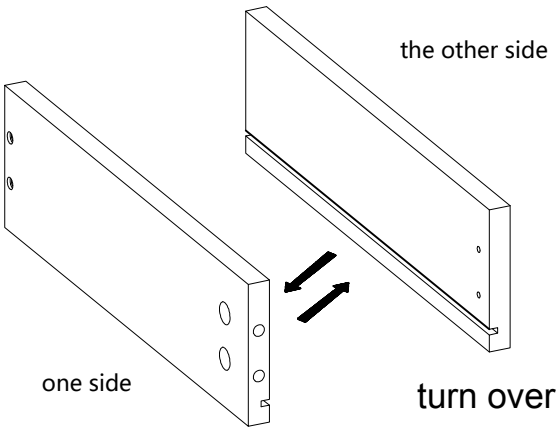

350*100*15mm 1 PC

21

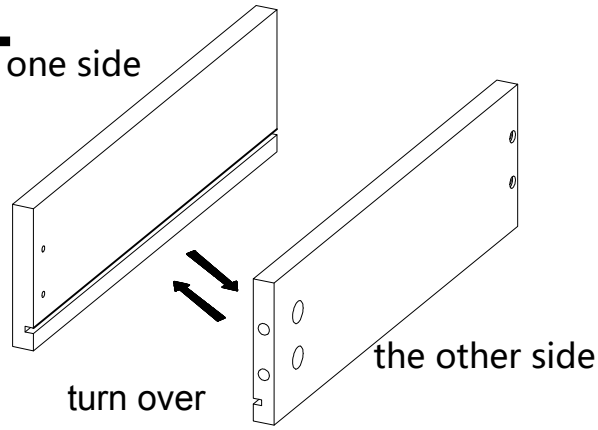

350*100*15mm 1 PC

22

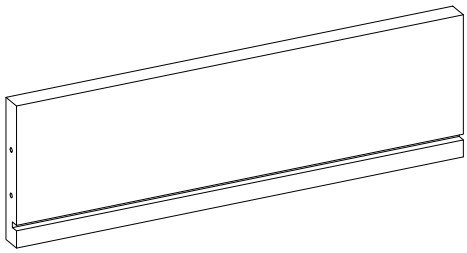

295*100*15mm 1 PC

23

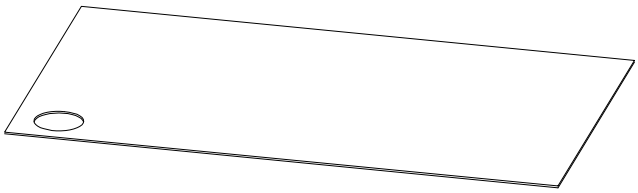

528*914*3mm 1 PC

24

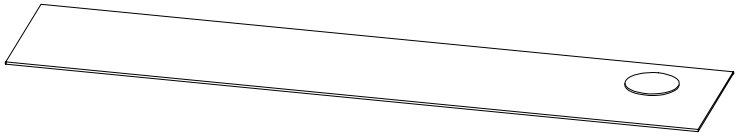

244*914*3mm 1 PC

25

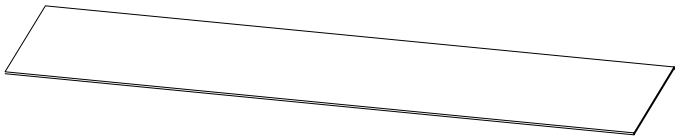

194*914*3mm 1 PC

26

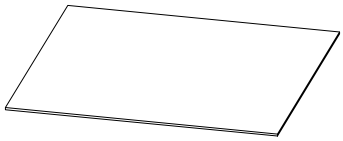

344*359*3mm 1 PC

27

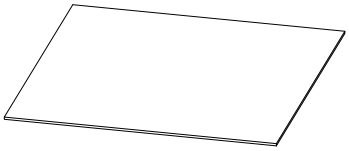

378*359*3mm 1 PC

28

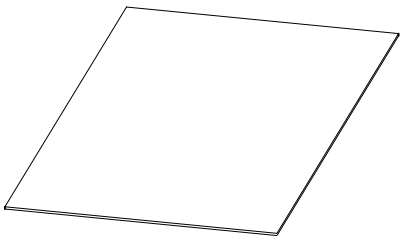

674*359*3mm 1 PC

29

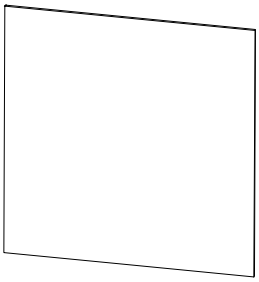

305*345*3mm 1 PC

A

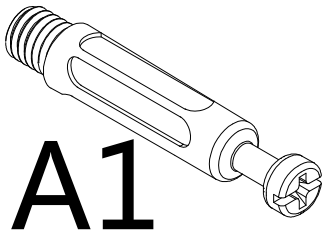

A1

ϕ7*40mm

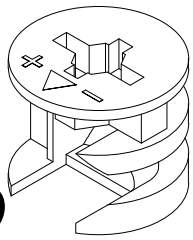

A2

ϕ15*11mm 57PCS

B

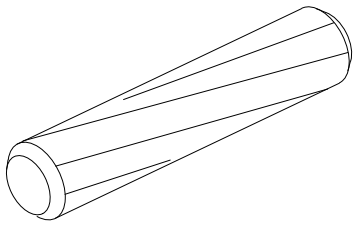

ϕ8*30mm 39PCS

C

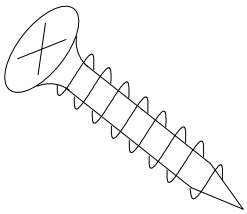

M3.5*14mm 50PCS

D

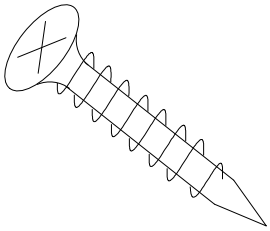

M3.5*16mm 4PCS

E

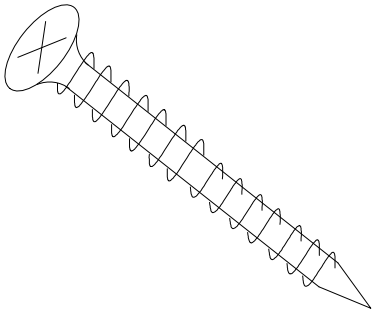

M3.5*35mm 4PCS

F Full Overlay

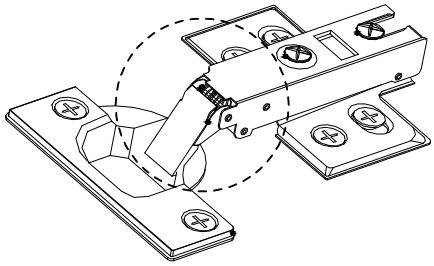

φ35mm 2PCS

G

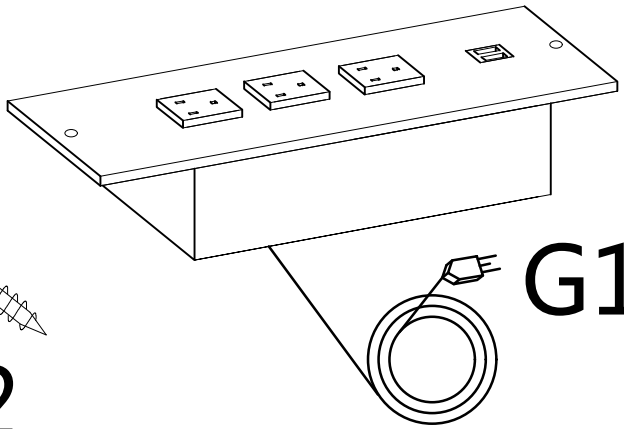

G1

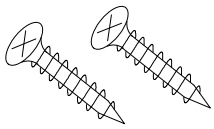

G2

1PC

H

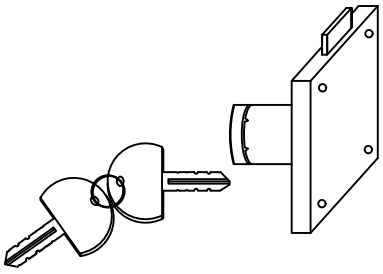

1PC

I

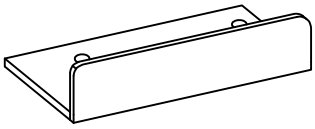

1PC

J

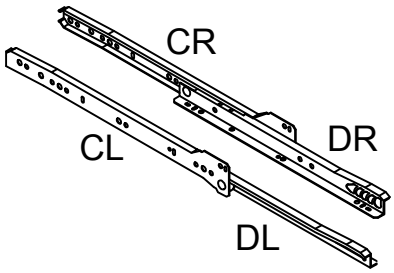

L=350mm

1PC

K

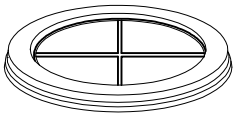

ϕ46mm

2PCS

L

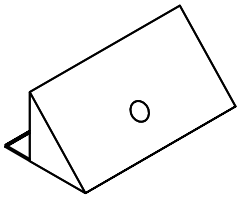

24PCS

M

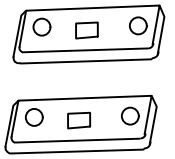

M1



M2

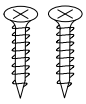

M4

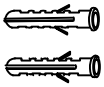

M3



M5

2PCS

N

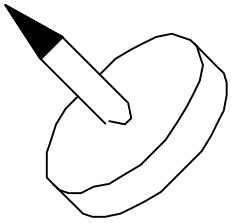

9PCS

O

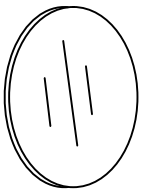

ϕ21mm

57PCS

Hardware installation demonstration

NOTE:Please make sure "A1"hardware tightened and can't be pulled out!

I

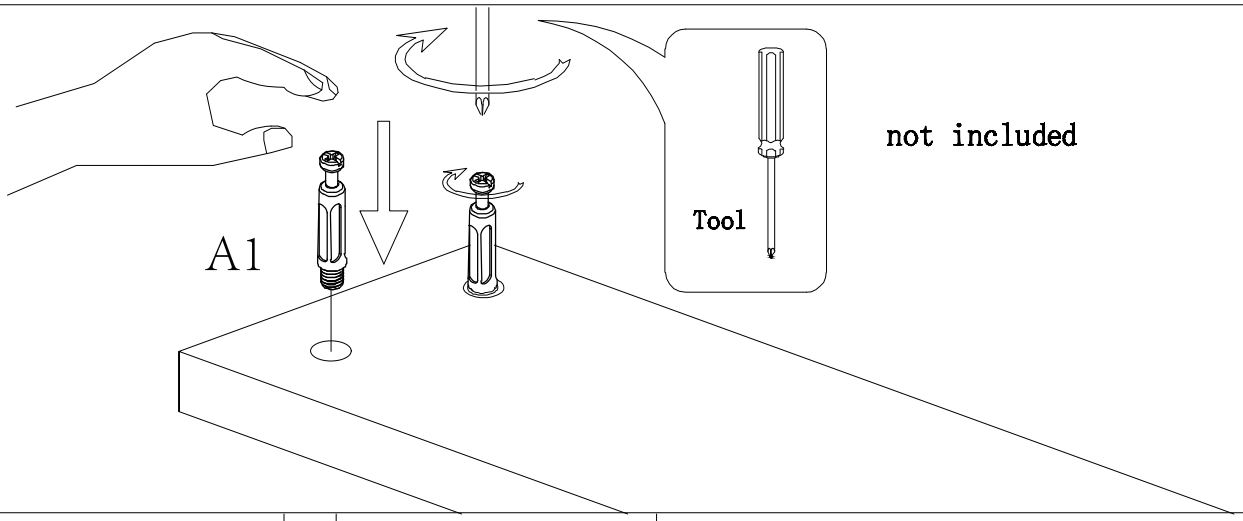

II

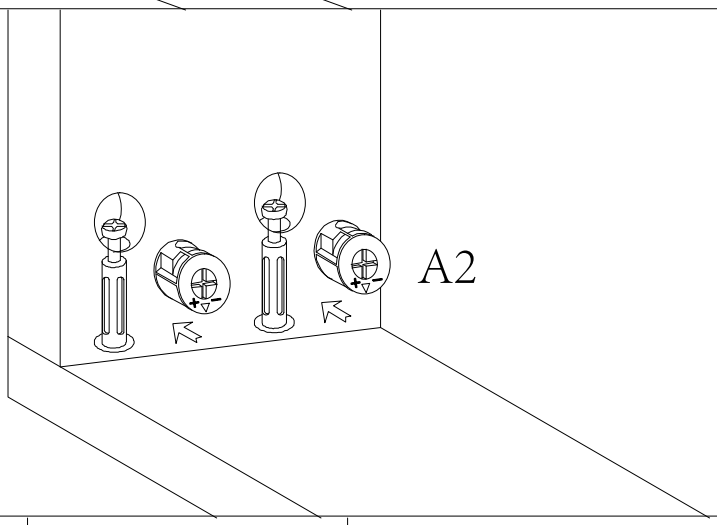

III

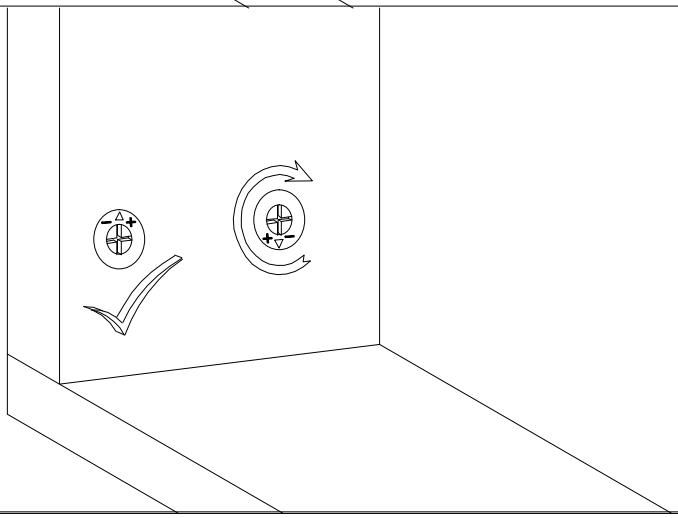

STEP 1

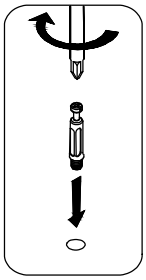

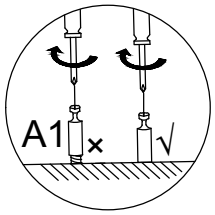

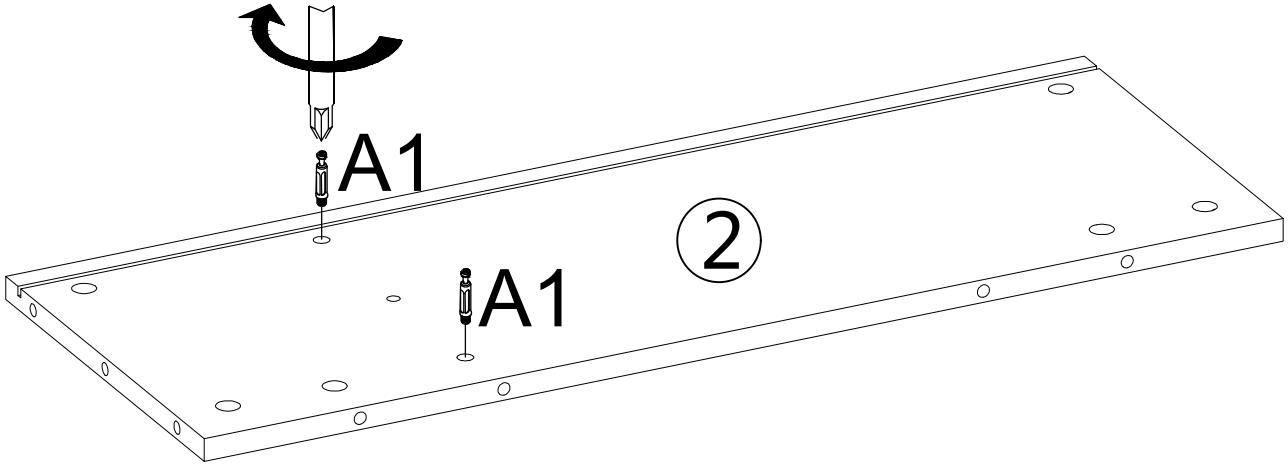

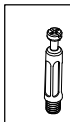

A1×2PCS

STEP 2

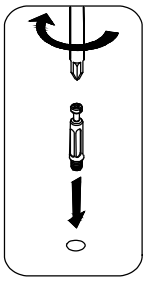

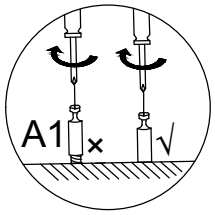

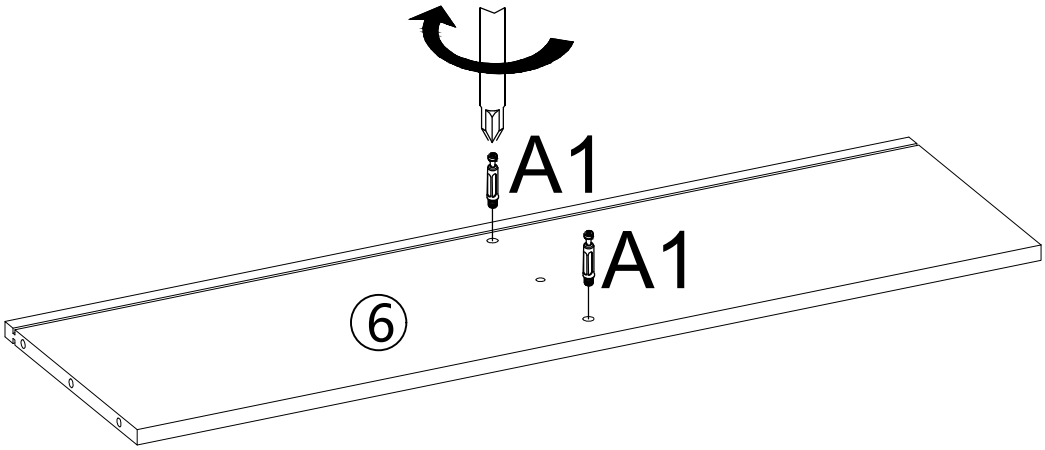



A1×2PCS

STEP 3

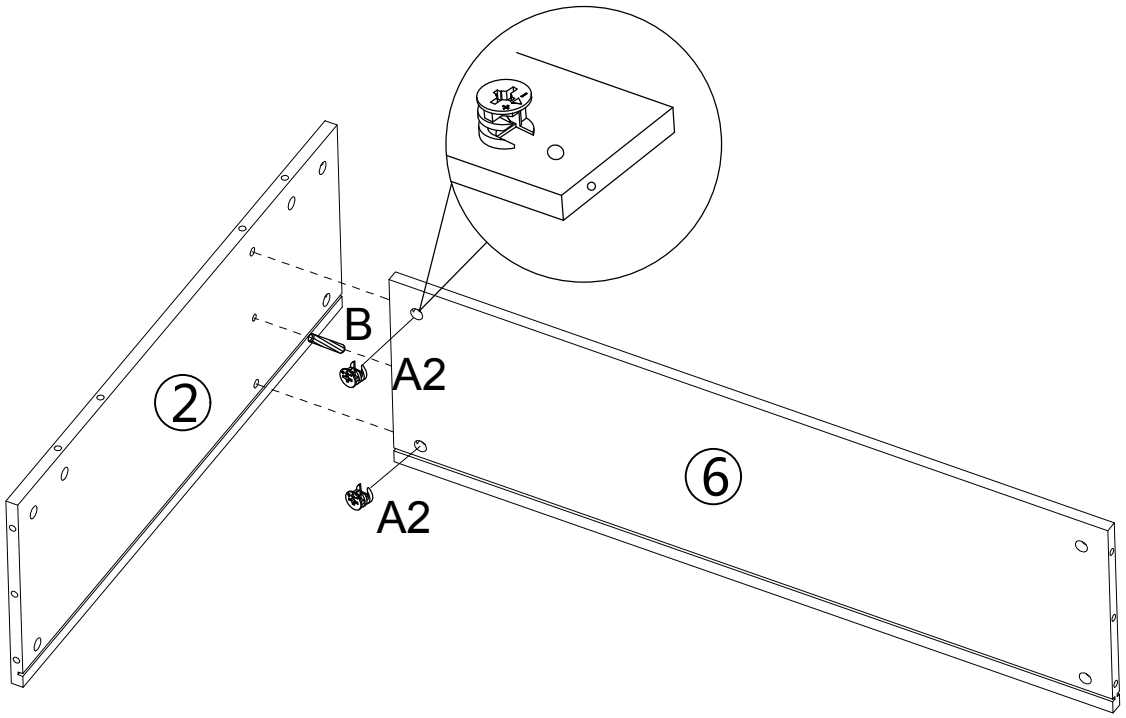

	A2×2PCS		B×1PC

STEP 4

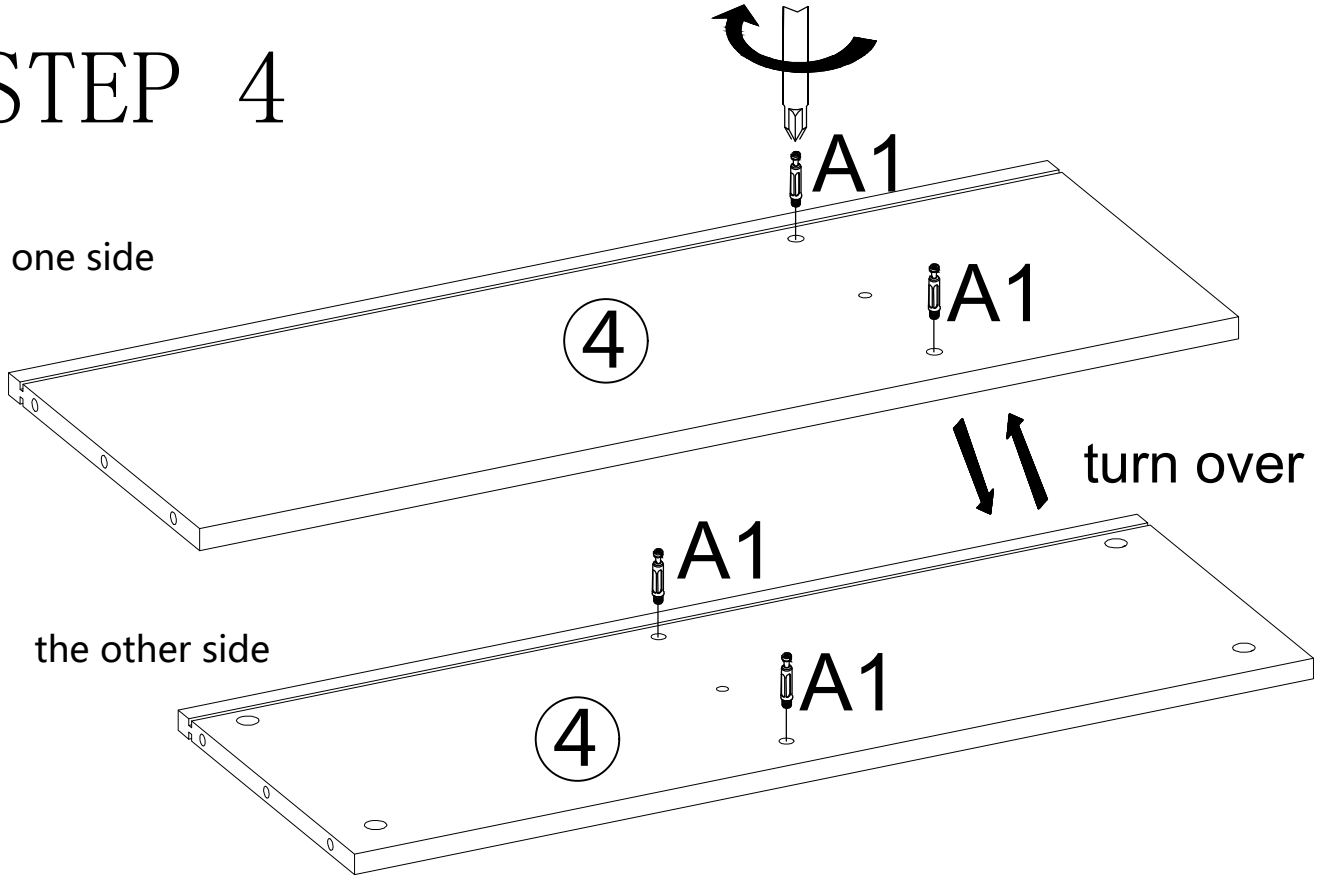

	A1×4PCS

STEP 5

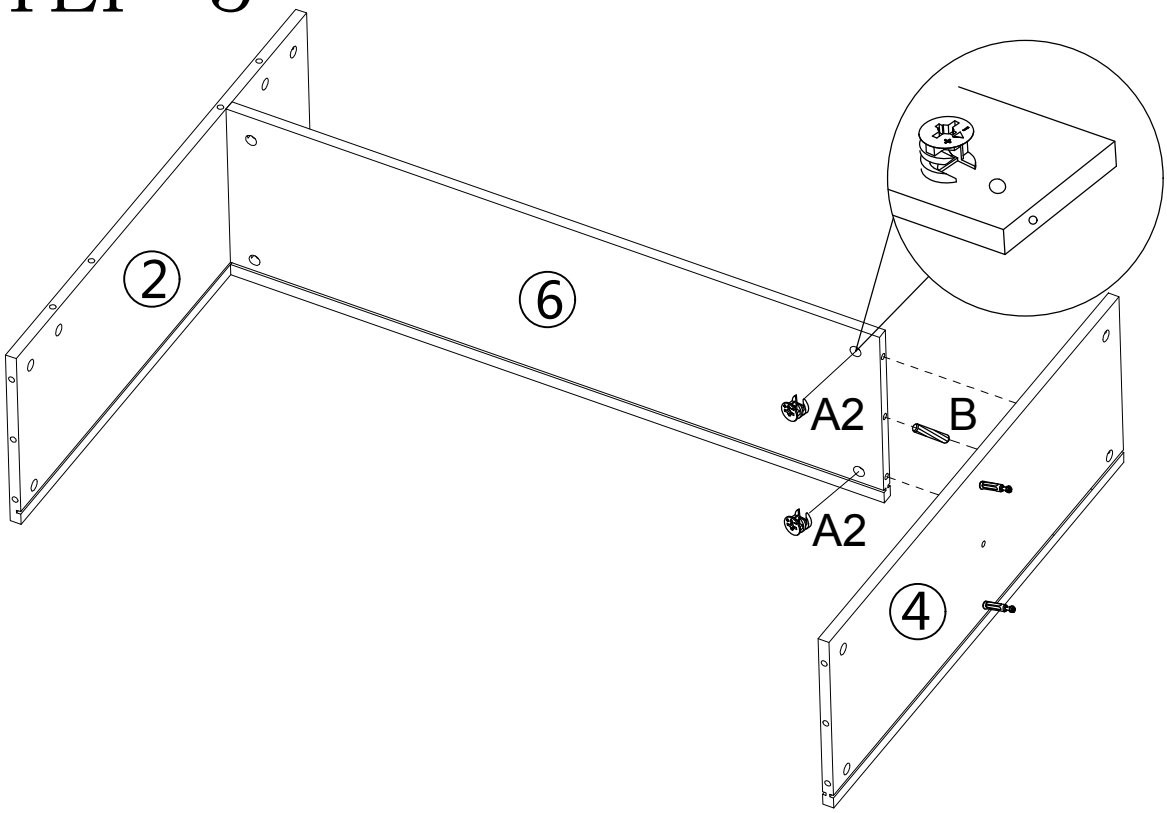

	A2×2PCS		B×1PC

STEP 6

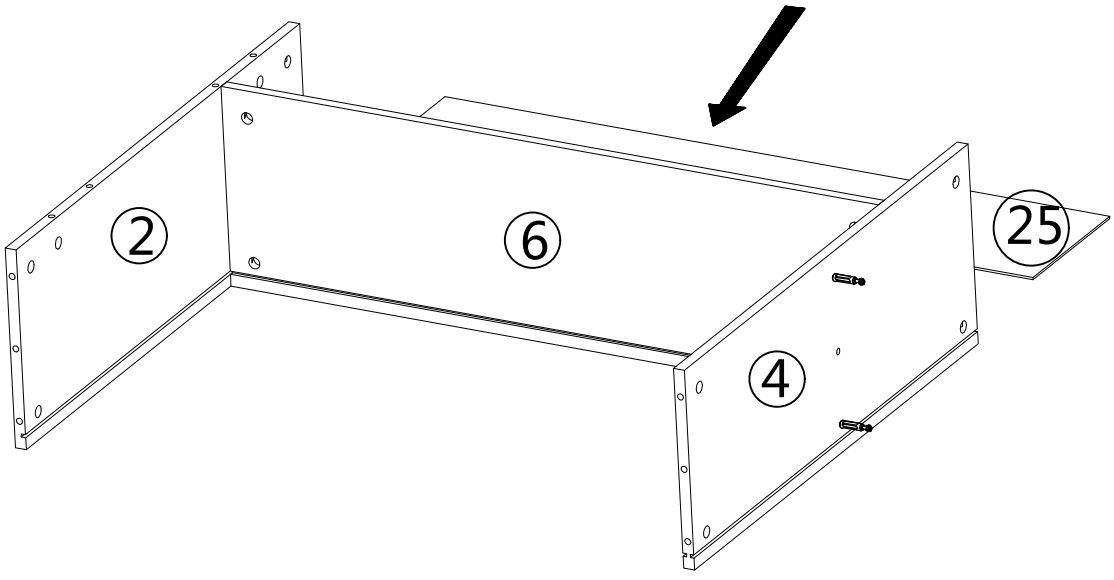

STEP 7

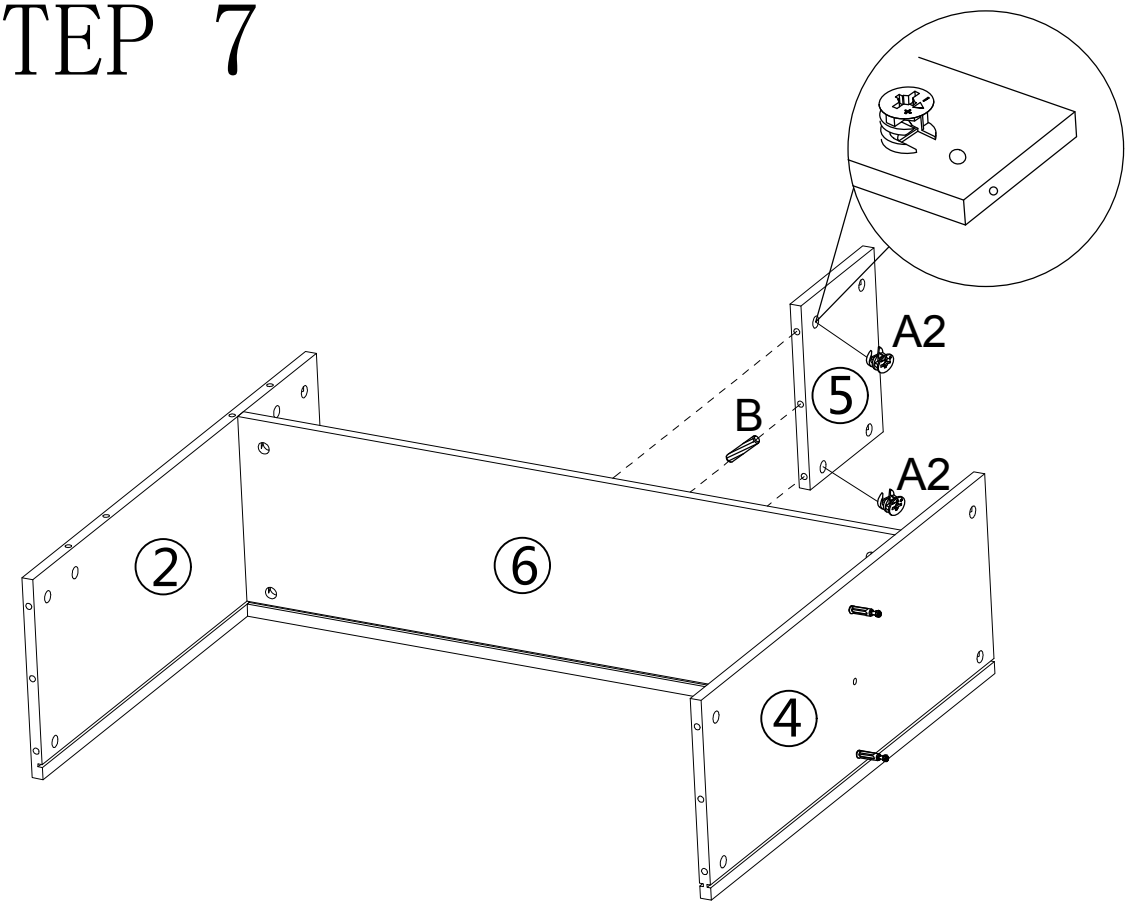

	A2×2PCS		B×1PC

STEP 8

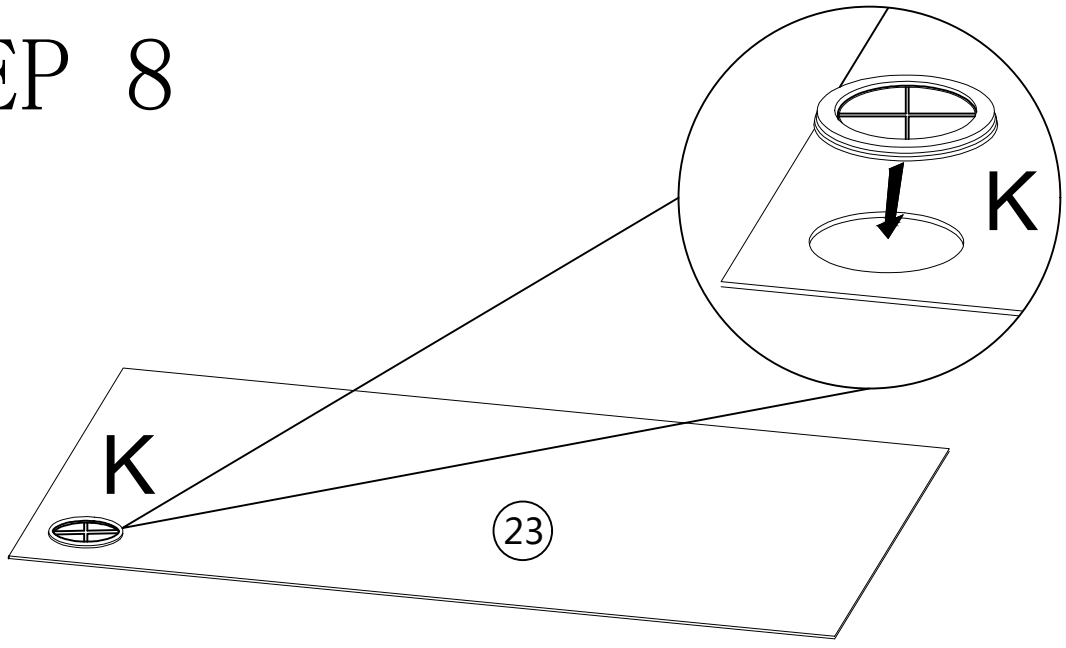

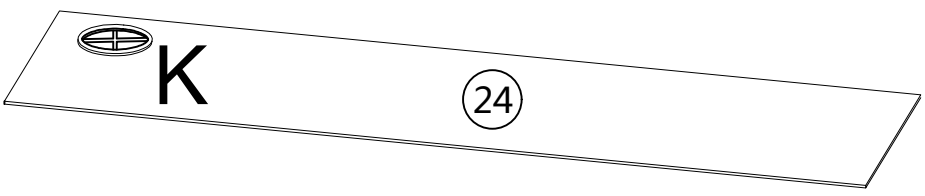

	K×2PCS

STEP 9

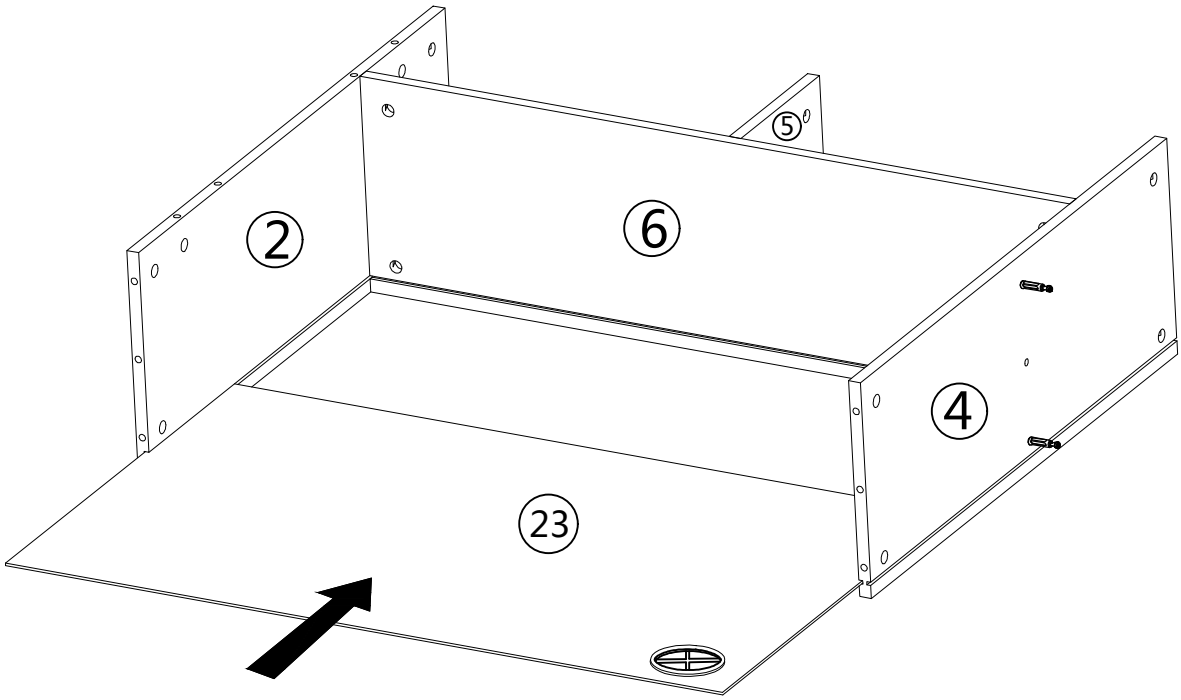

STEP 10

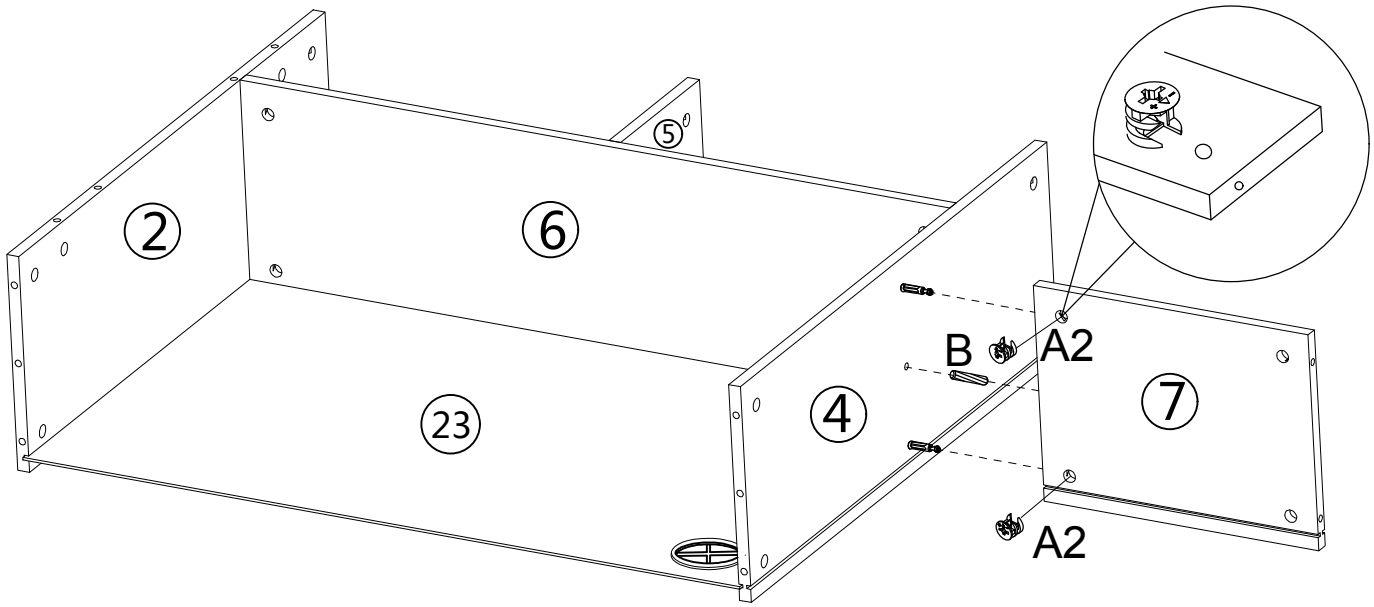

	A2×2PCS		B×1PC

STEP 11

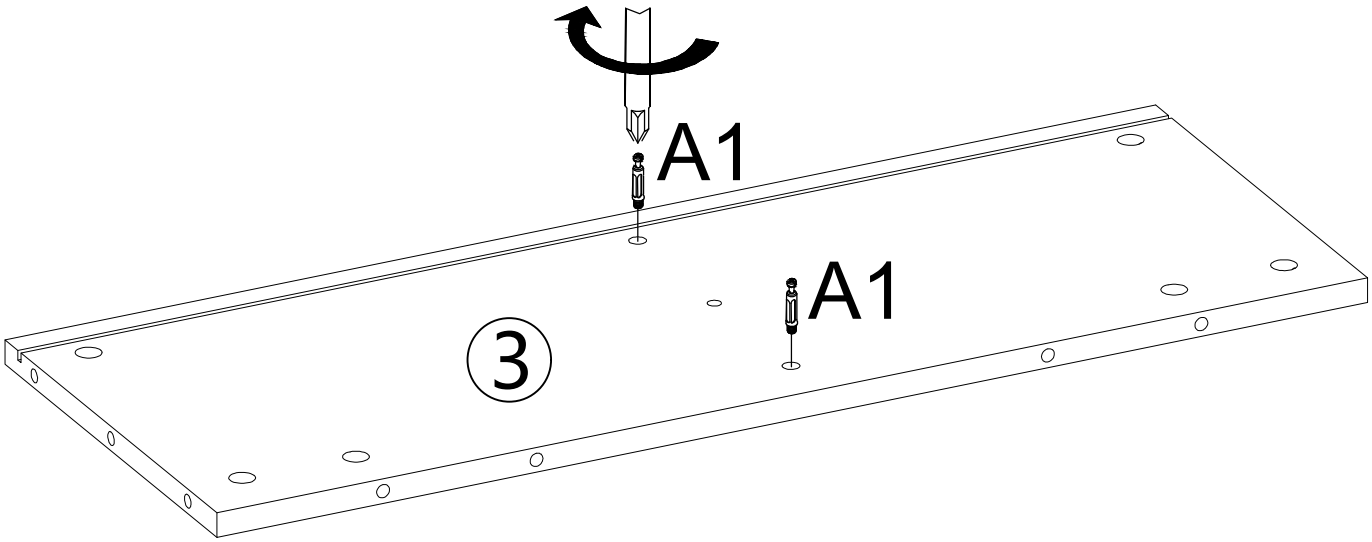

	A1×2PCS

STEP 12

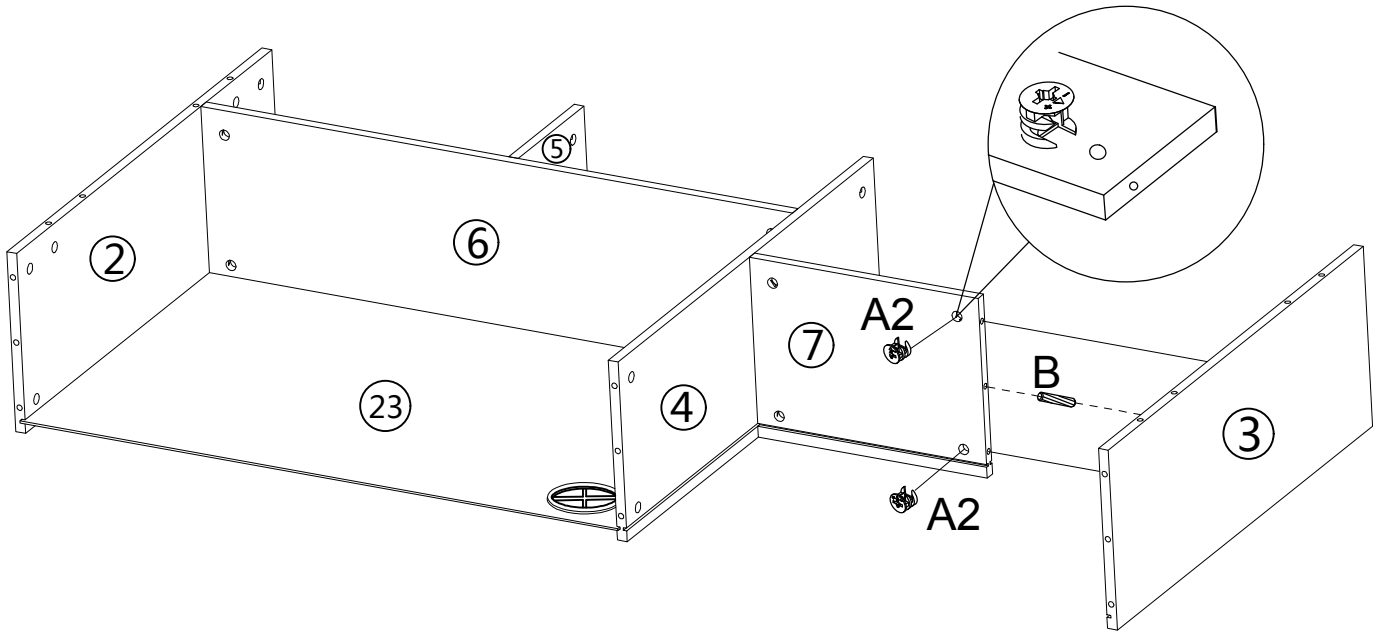

	A2×2PCS		B×1PC

STEP 13

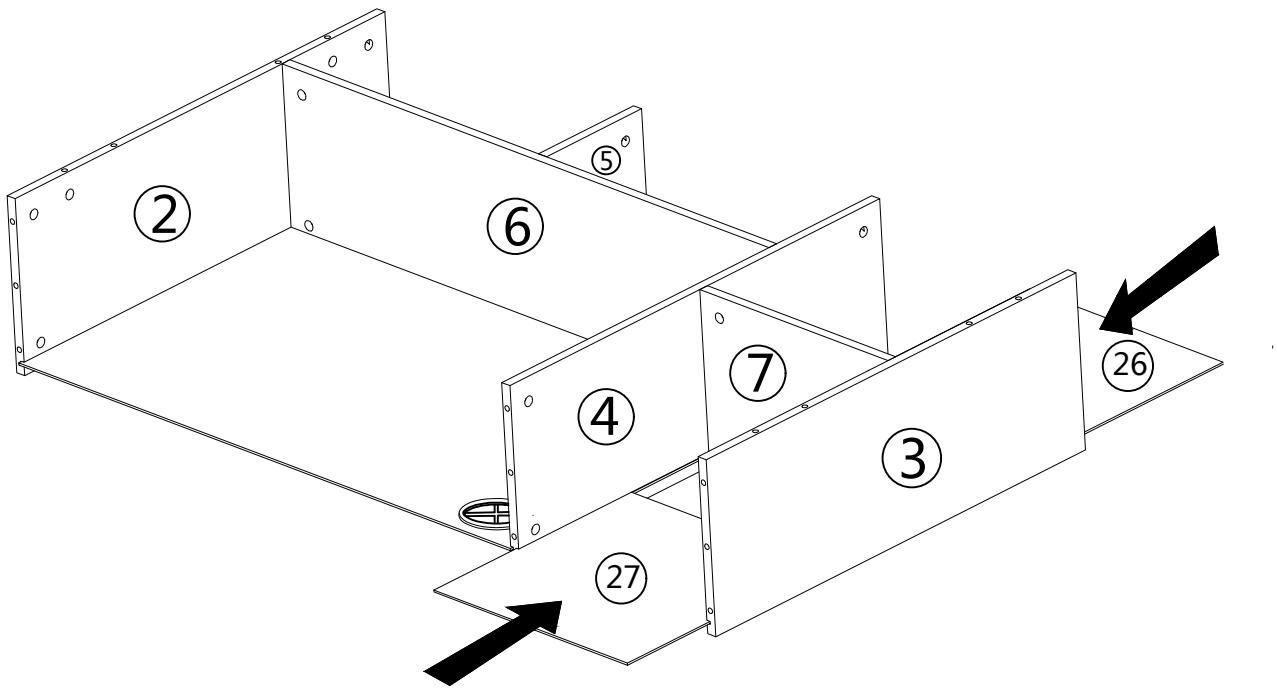

STEP 14

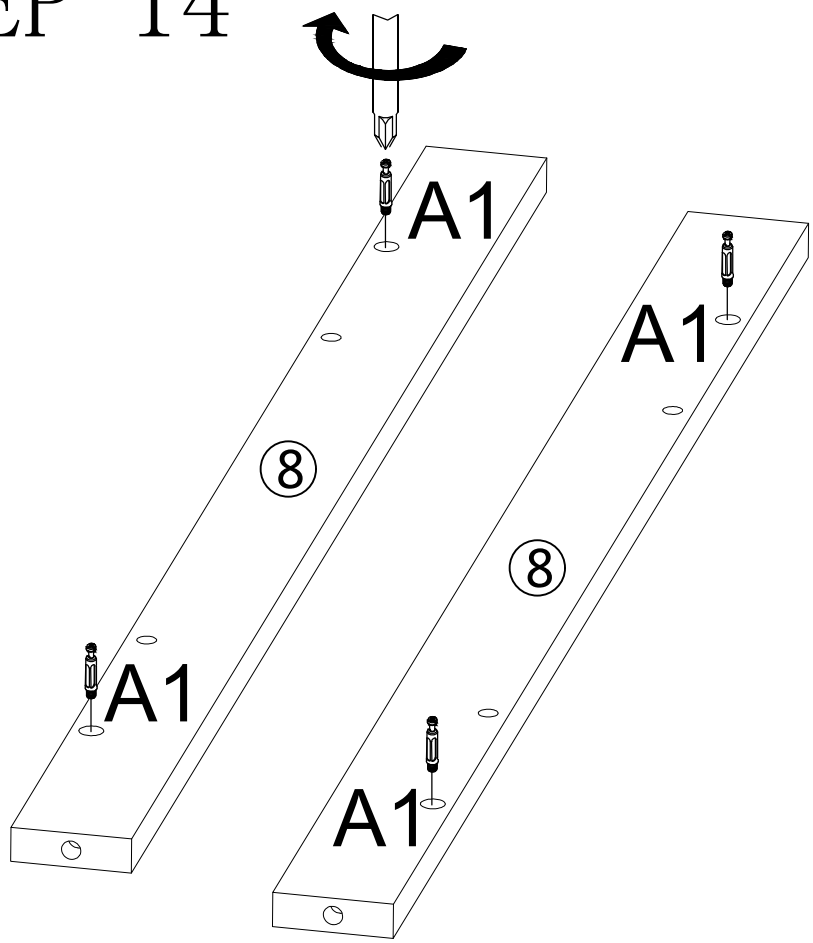

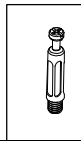

A1×4PCS

STEP 15

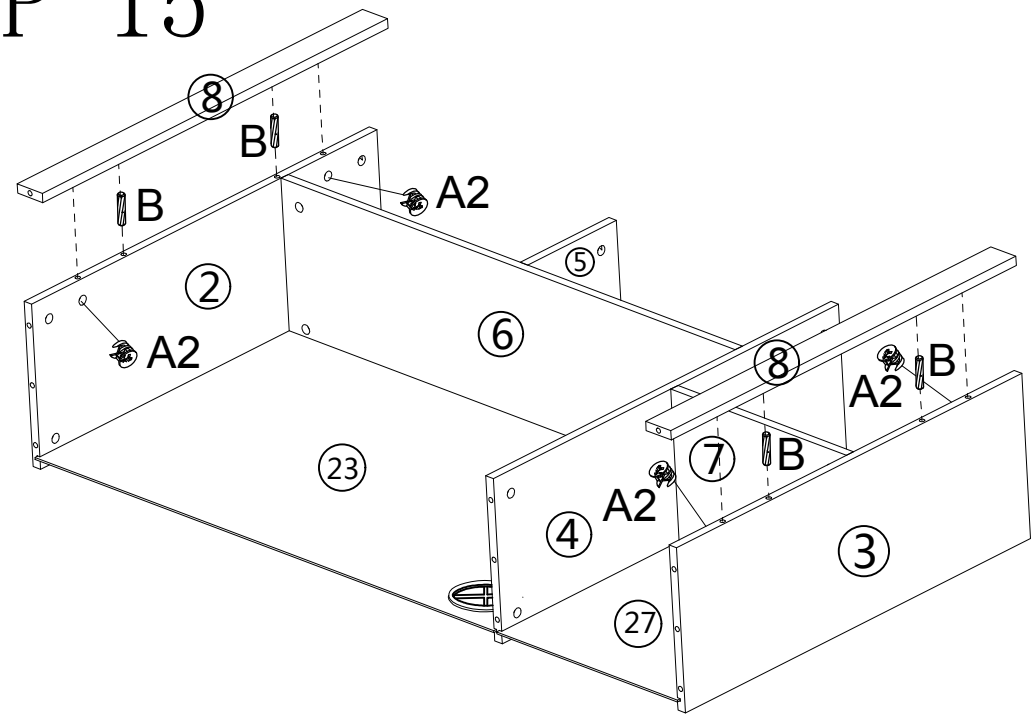

	A2×4PCS		B×4PCS

STEP 16

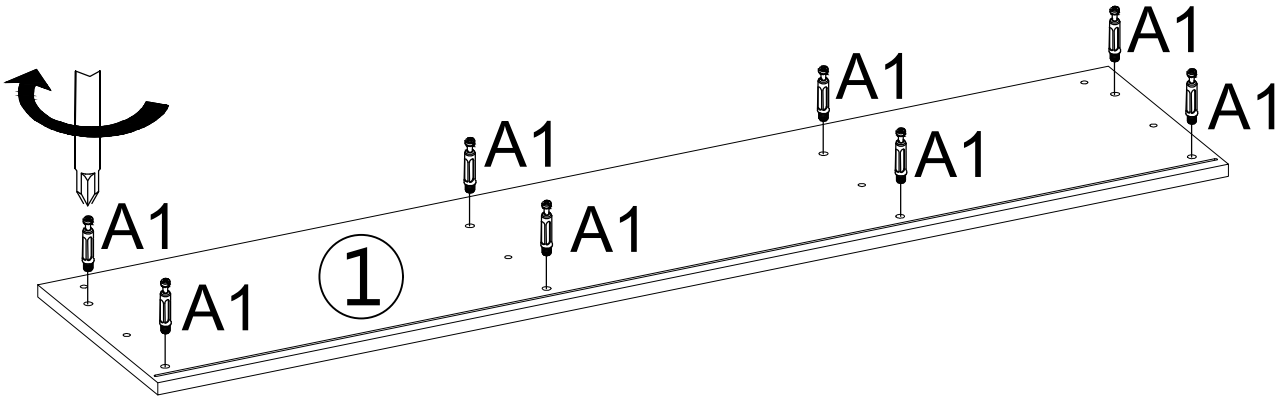

	A1×8PCS

STEP 17

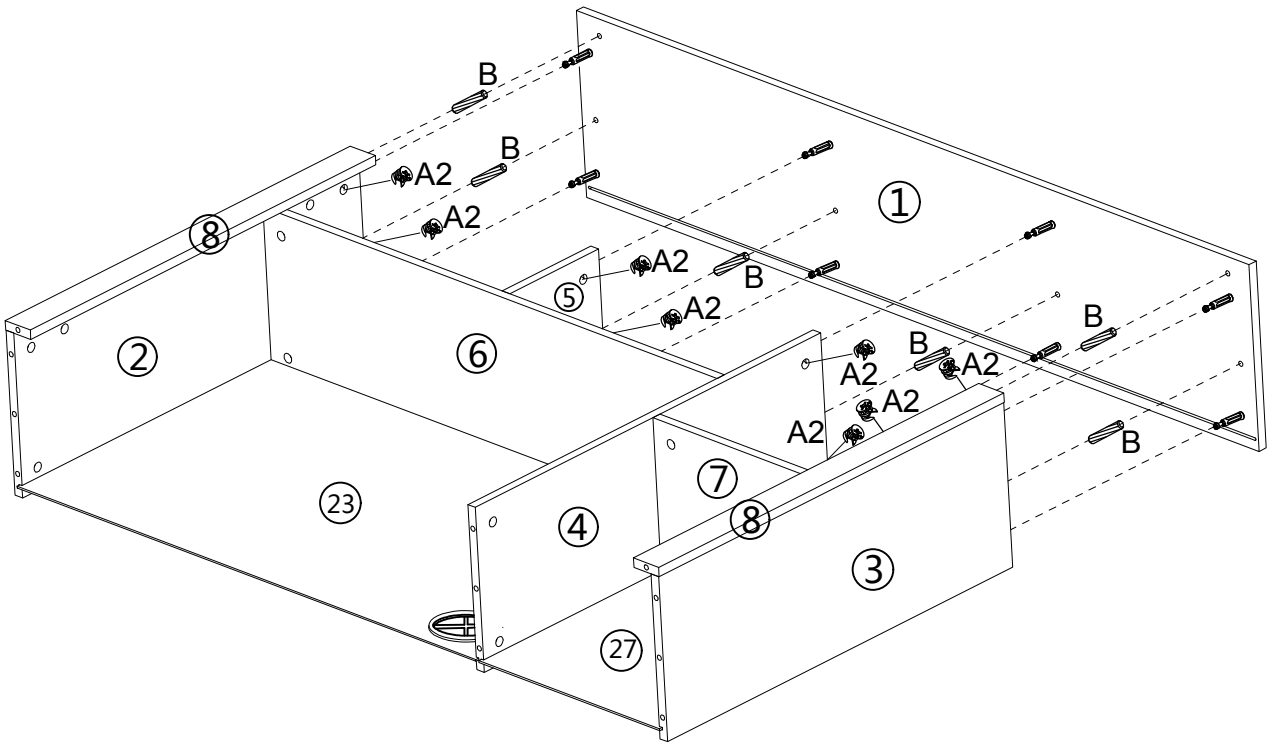

	A2×8PCS		B×6PCS

STEP 18

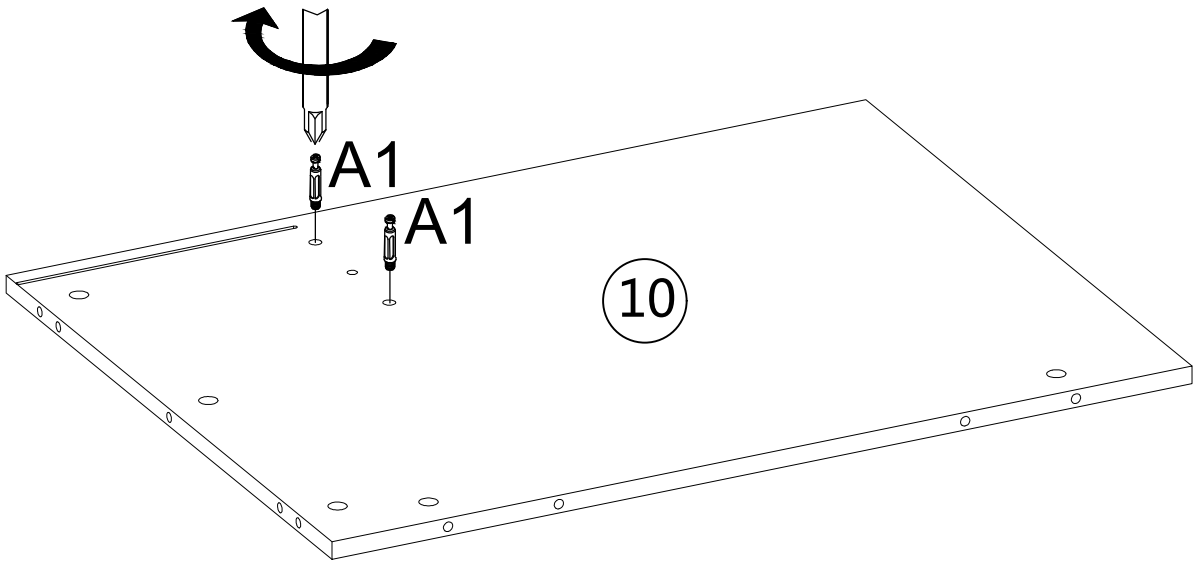

	A1×2PCS

STEP 19

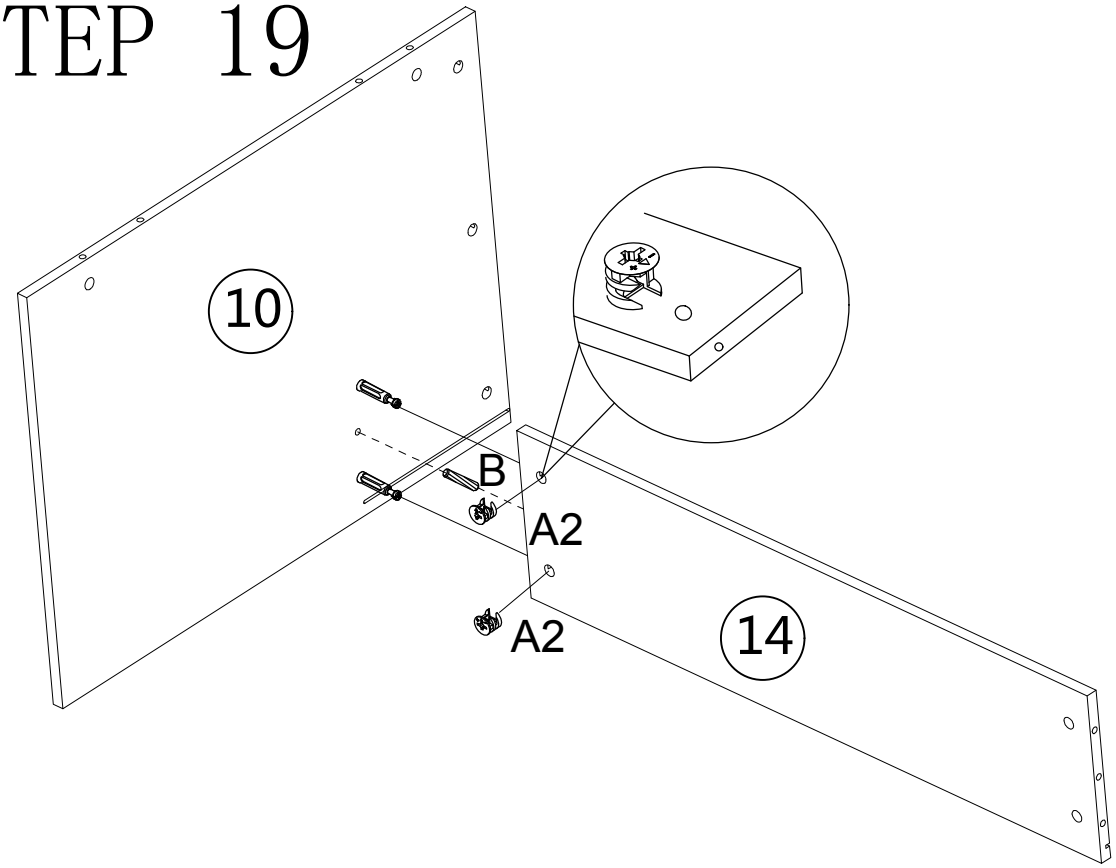

	A2×2PCS		B×1PC

STEP 20

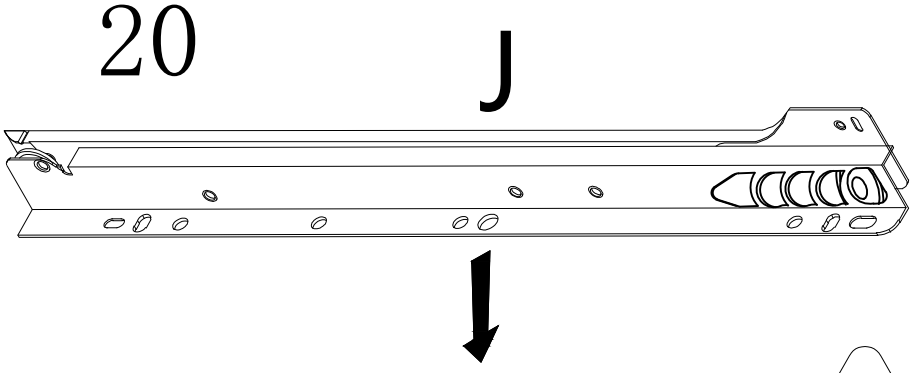



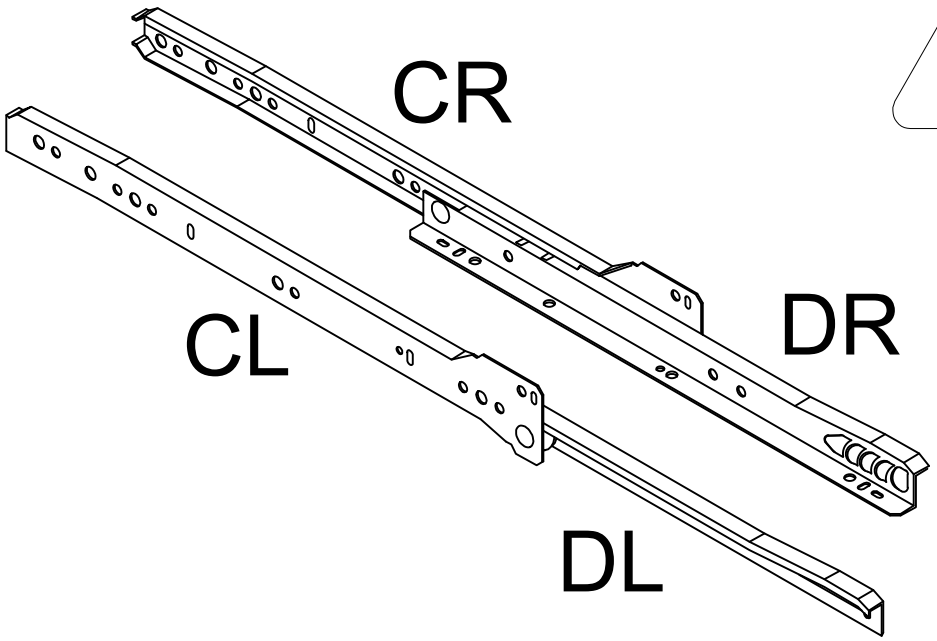

STEP 21

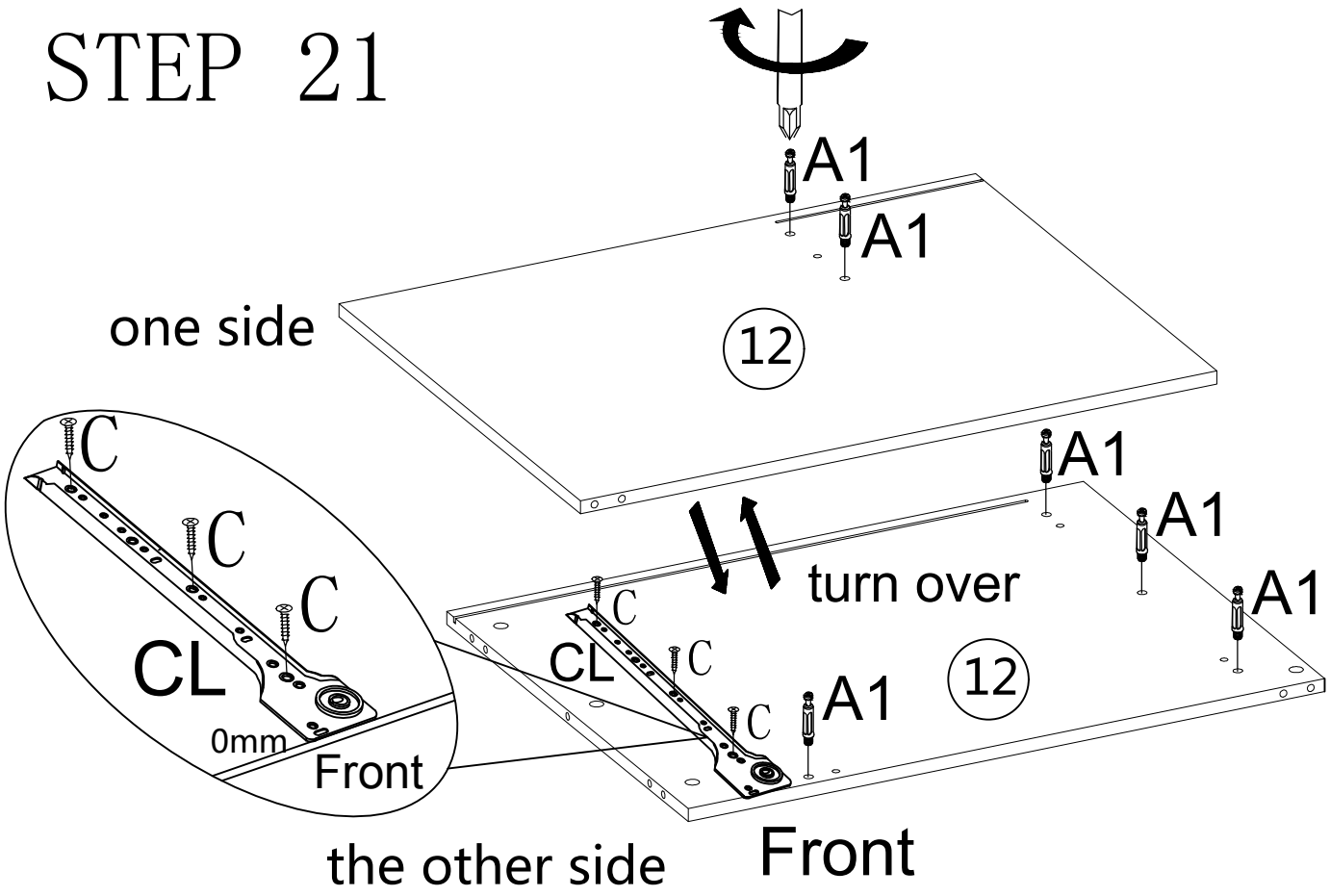

	A1×6PCS		C×3PCS		CL×1PC

STEP 22

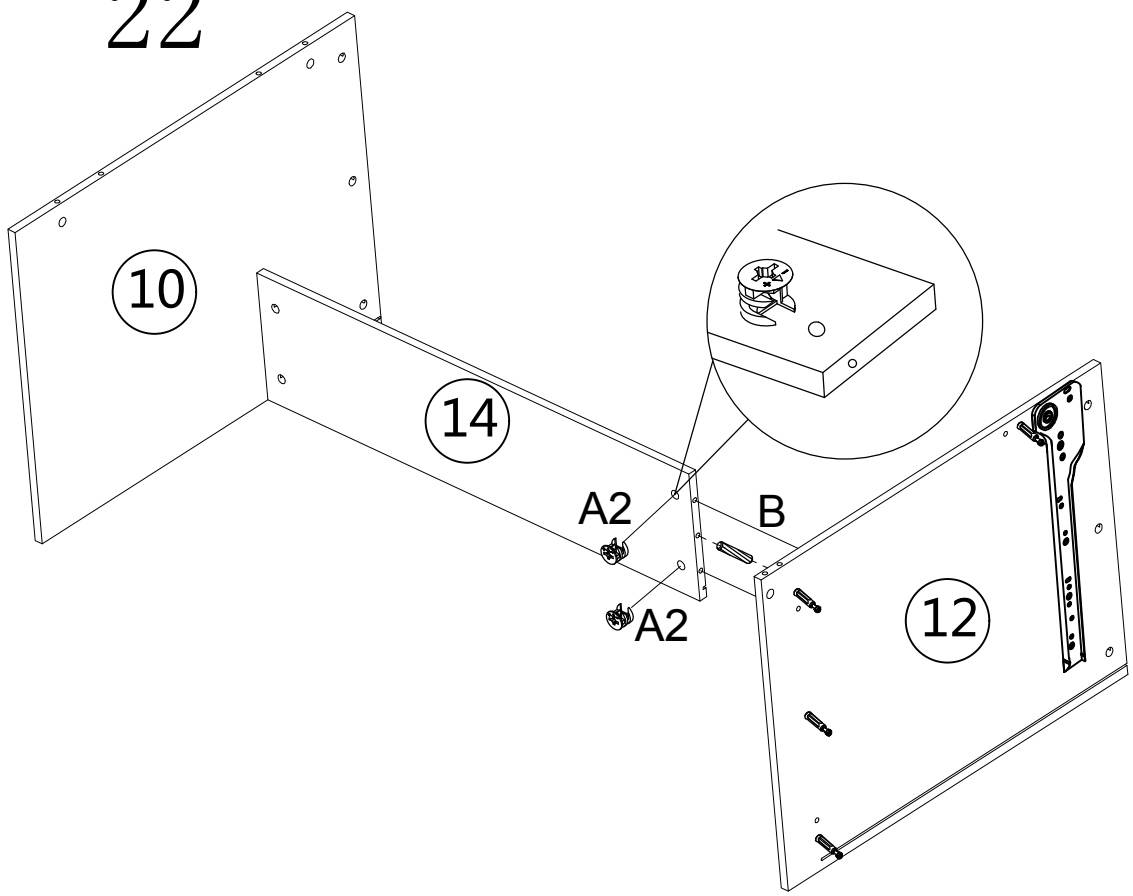

	A2×2PCS		B×1PC

STEP 23

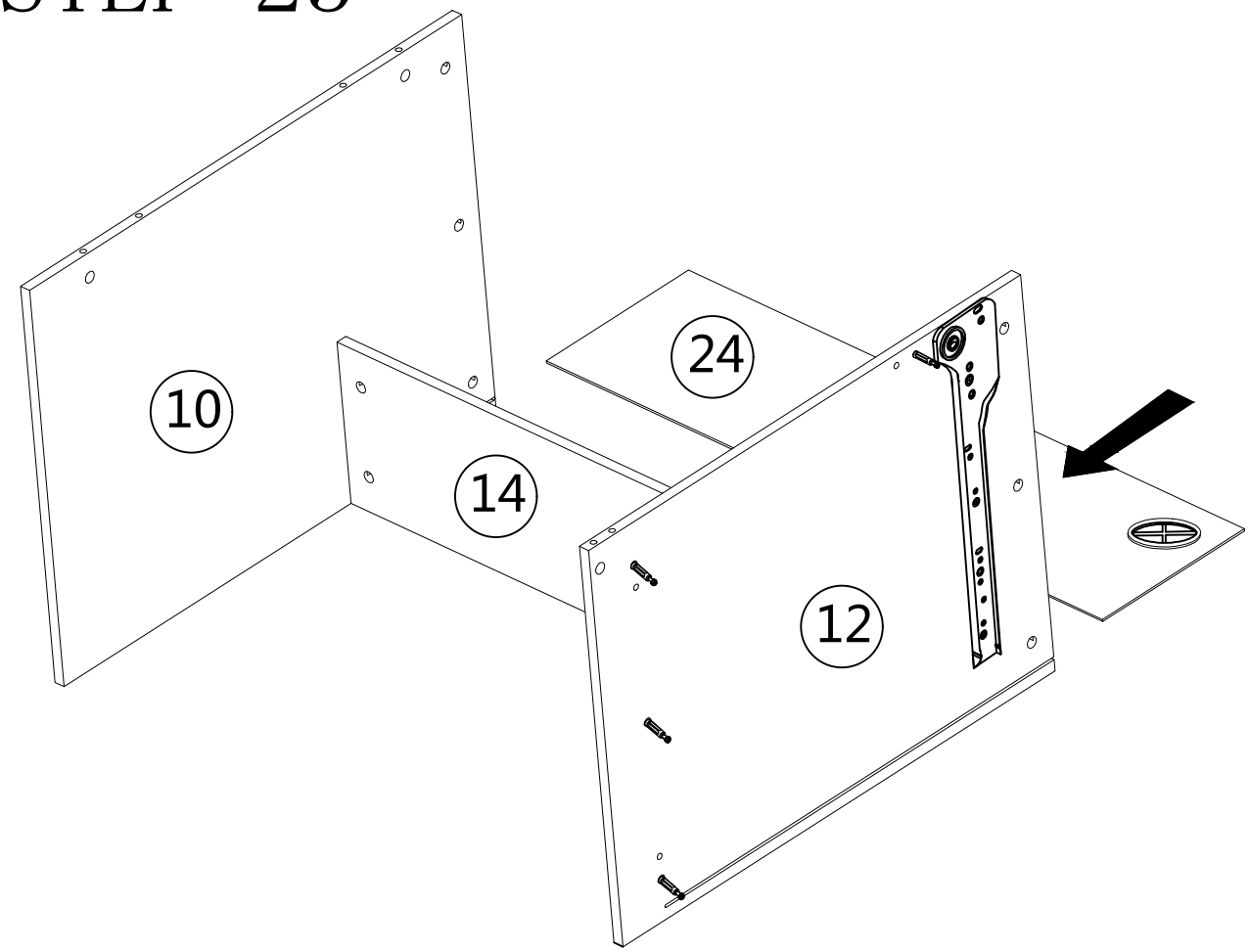

STEP 24

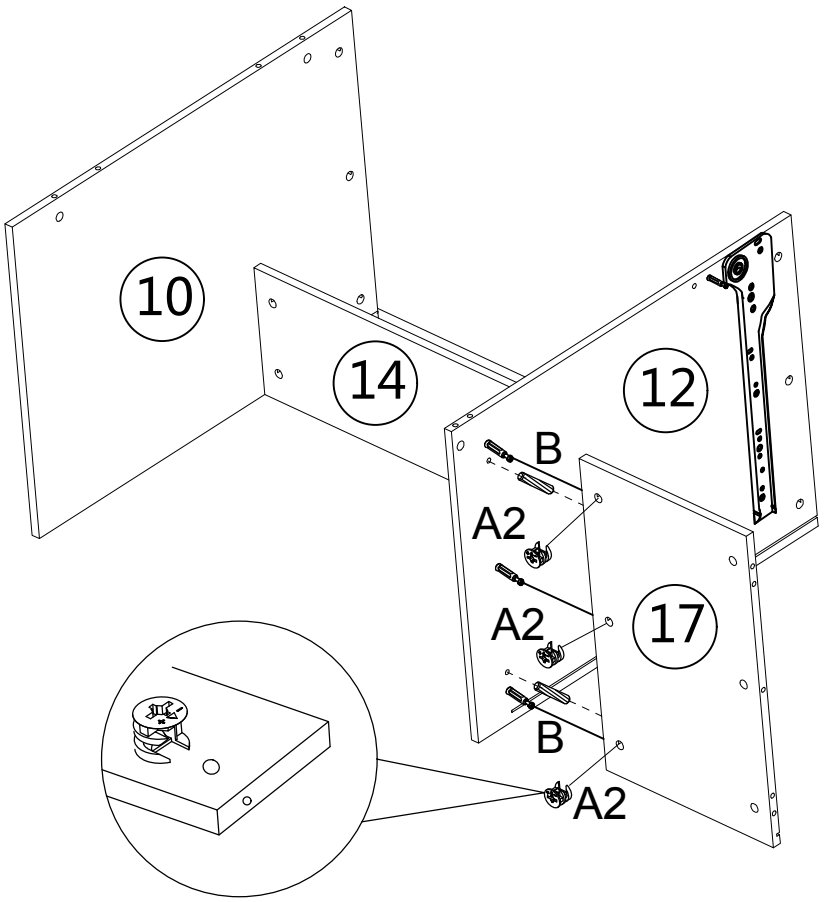

	A2×3PCS
	B×2PCS

STEP 25

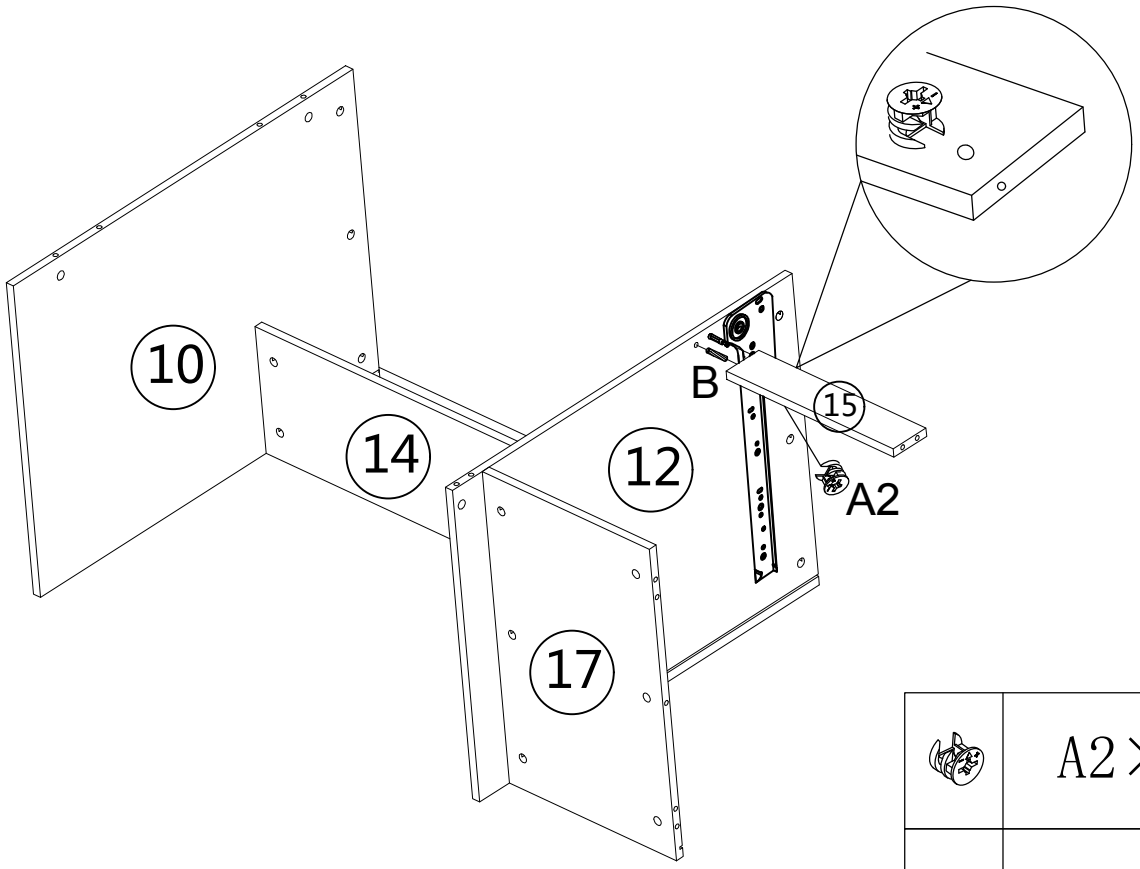

	A2×1PC
	B×1PC

STEP 26

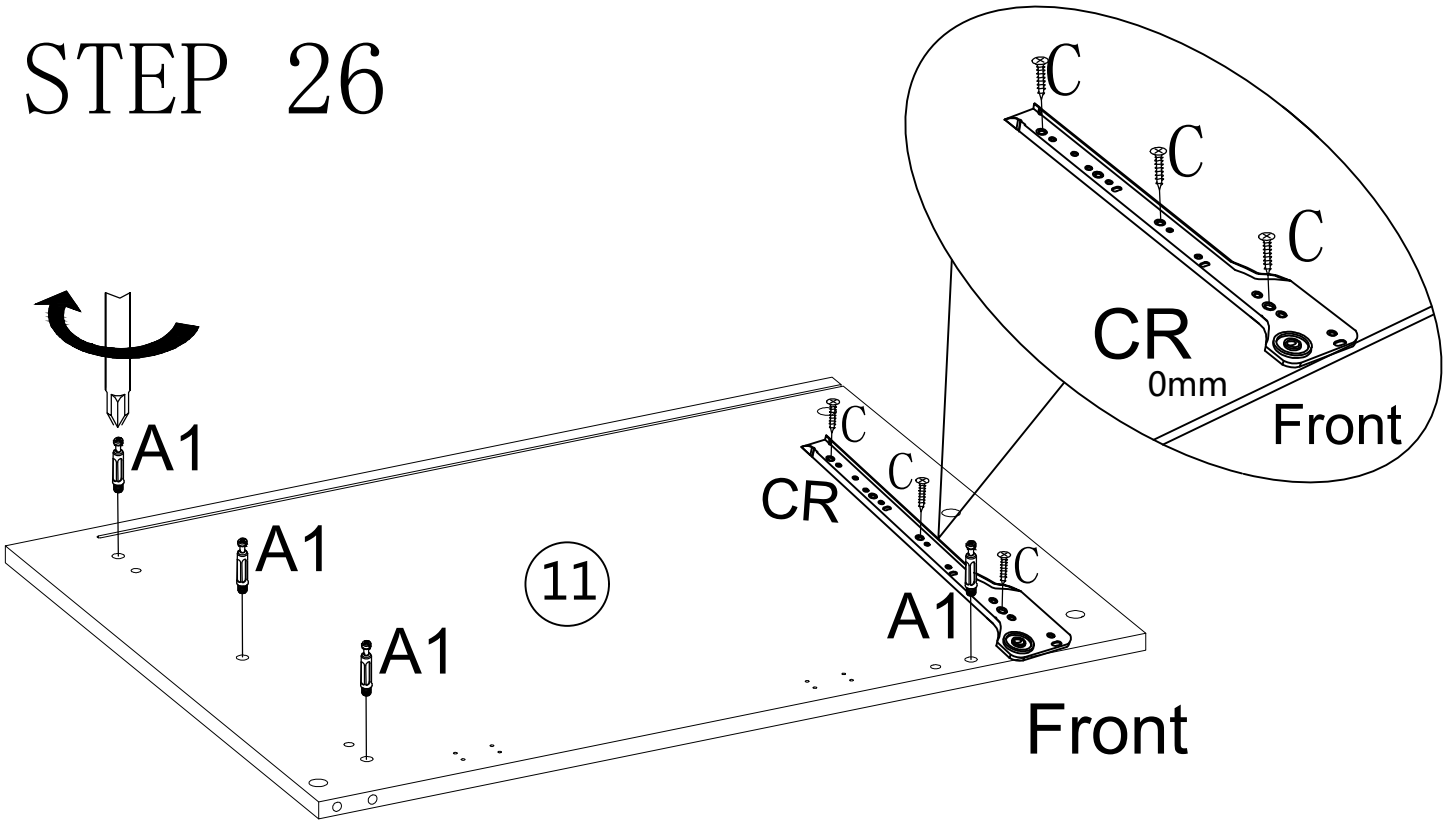

	A1×4PCS		C×3PCS		CR×1PC

STEP 27

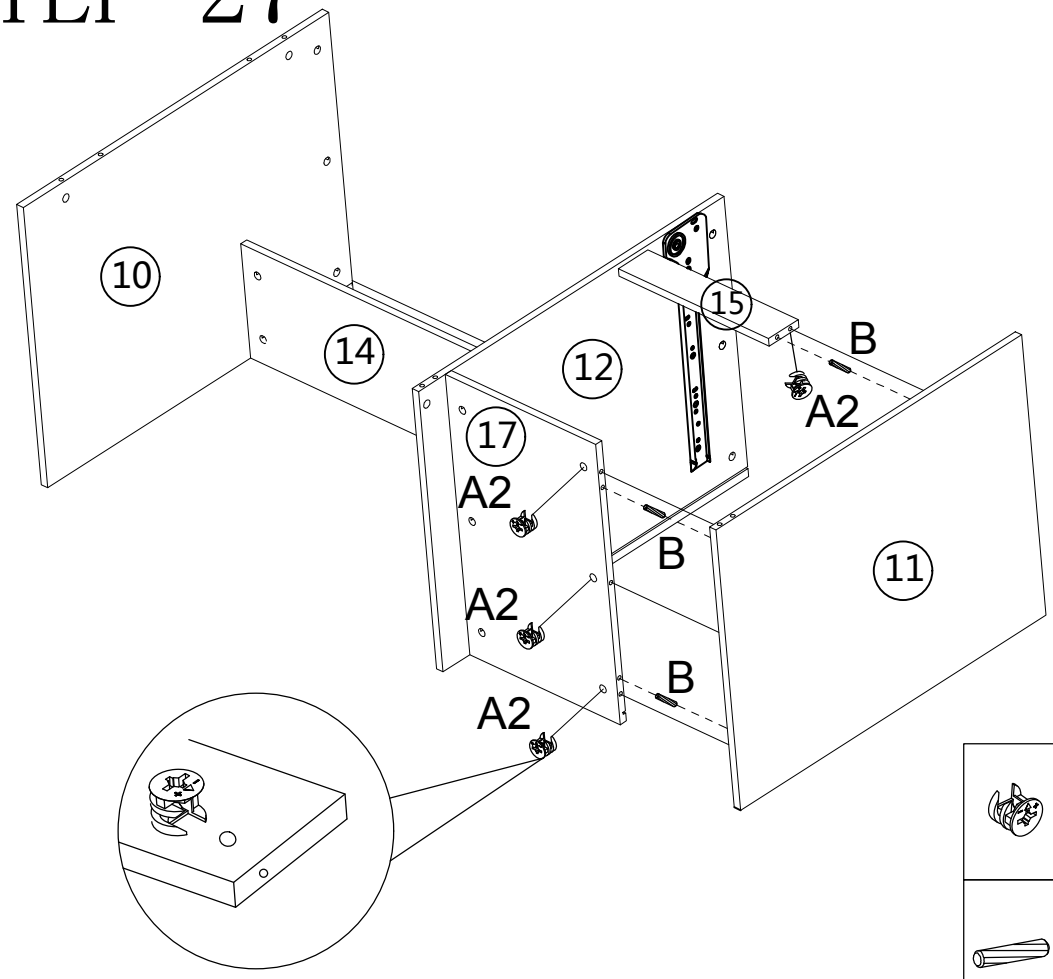

	A2×4PCS
	B×3PCS

STEP 28

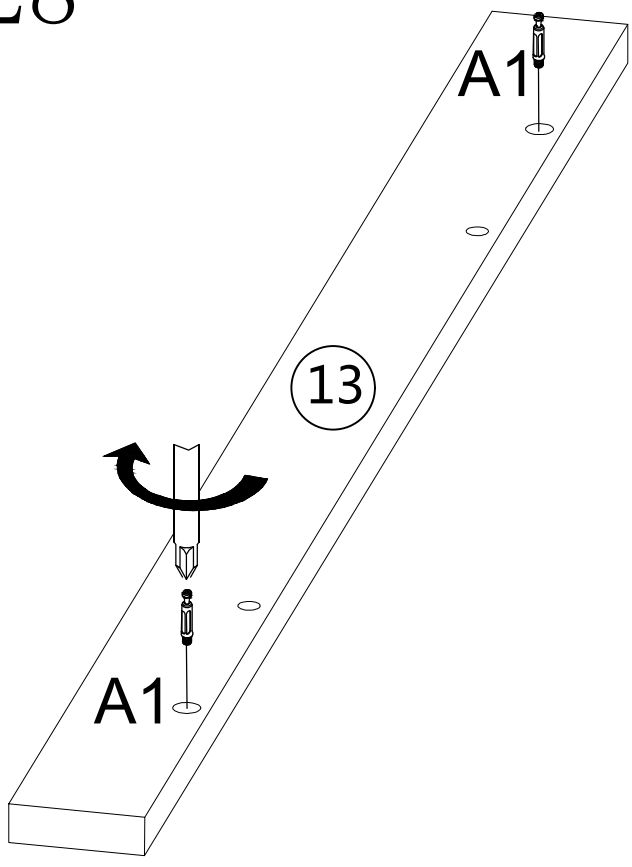

	A1×2PCS

STEP 29

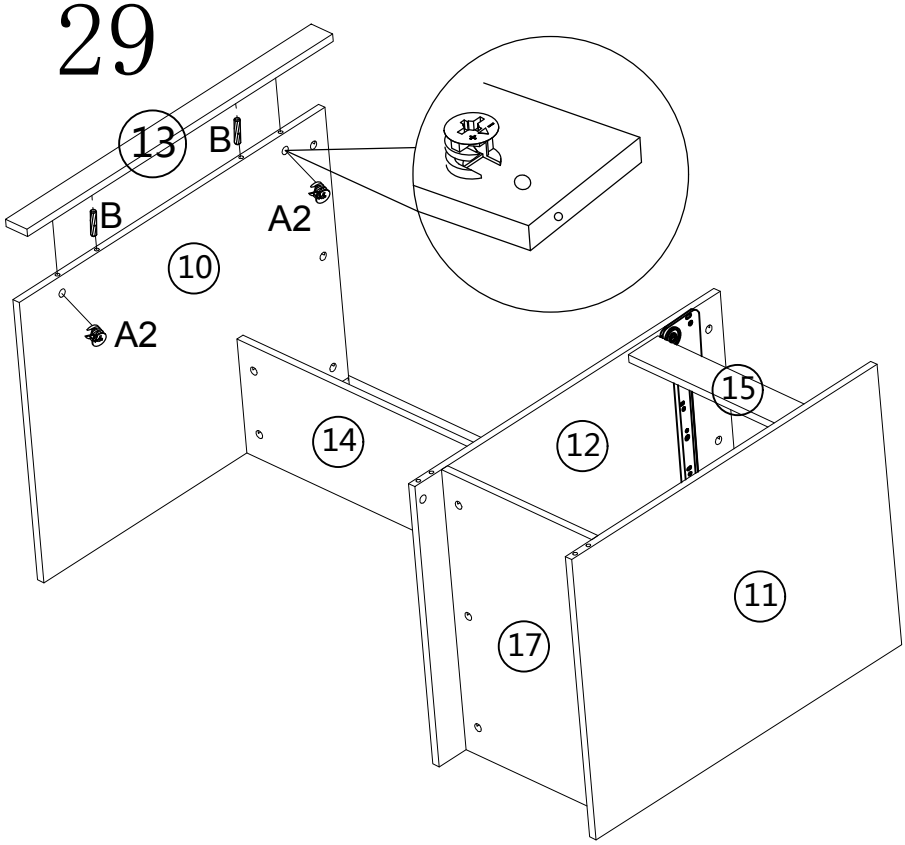

	A2×2PCS		B×2PCS

STEP 30

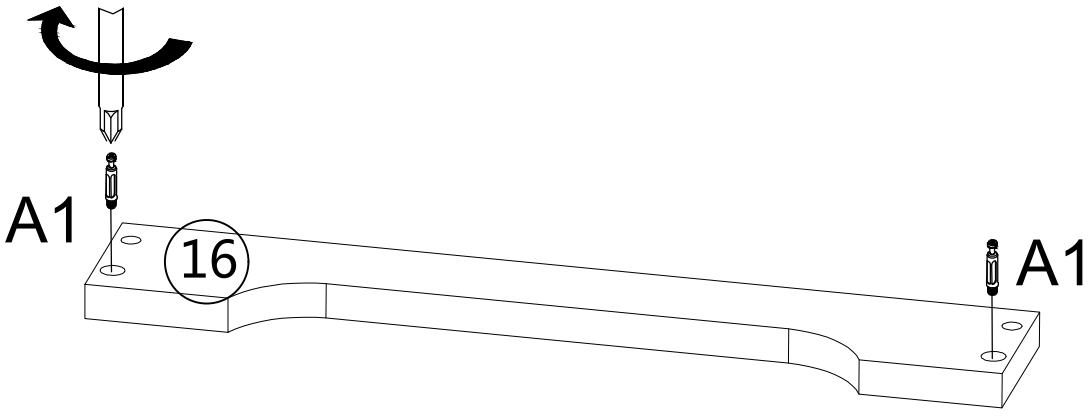

	A1×2PCS

STEP 31

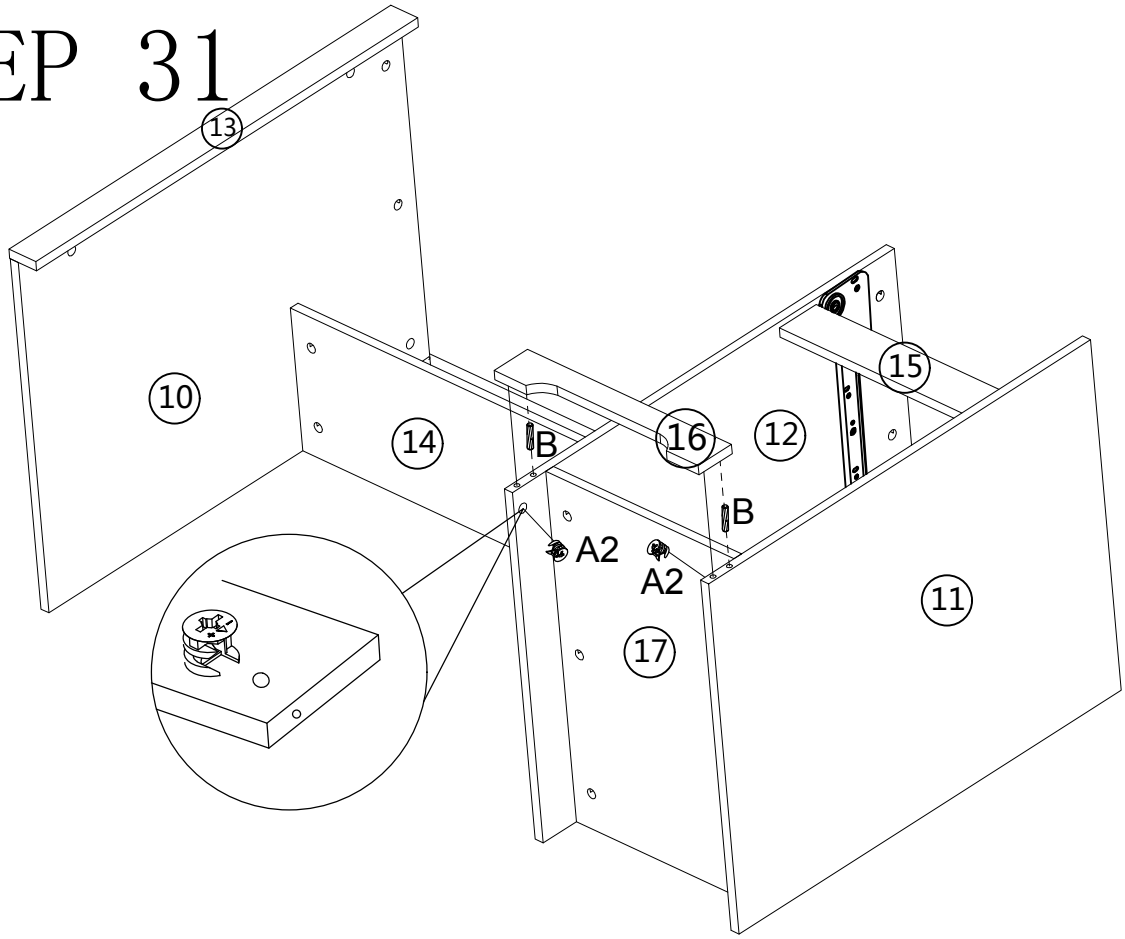

	A2×2PCS		B×2PCS

STEP 32

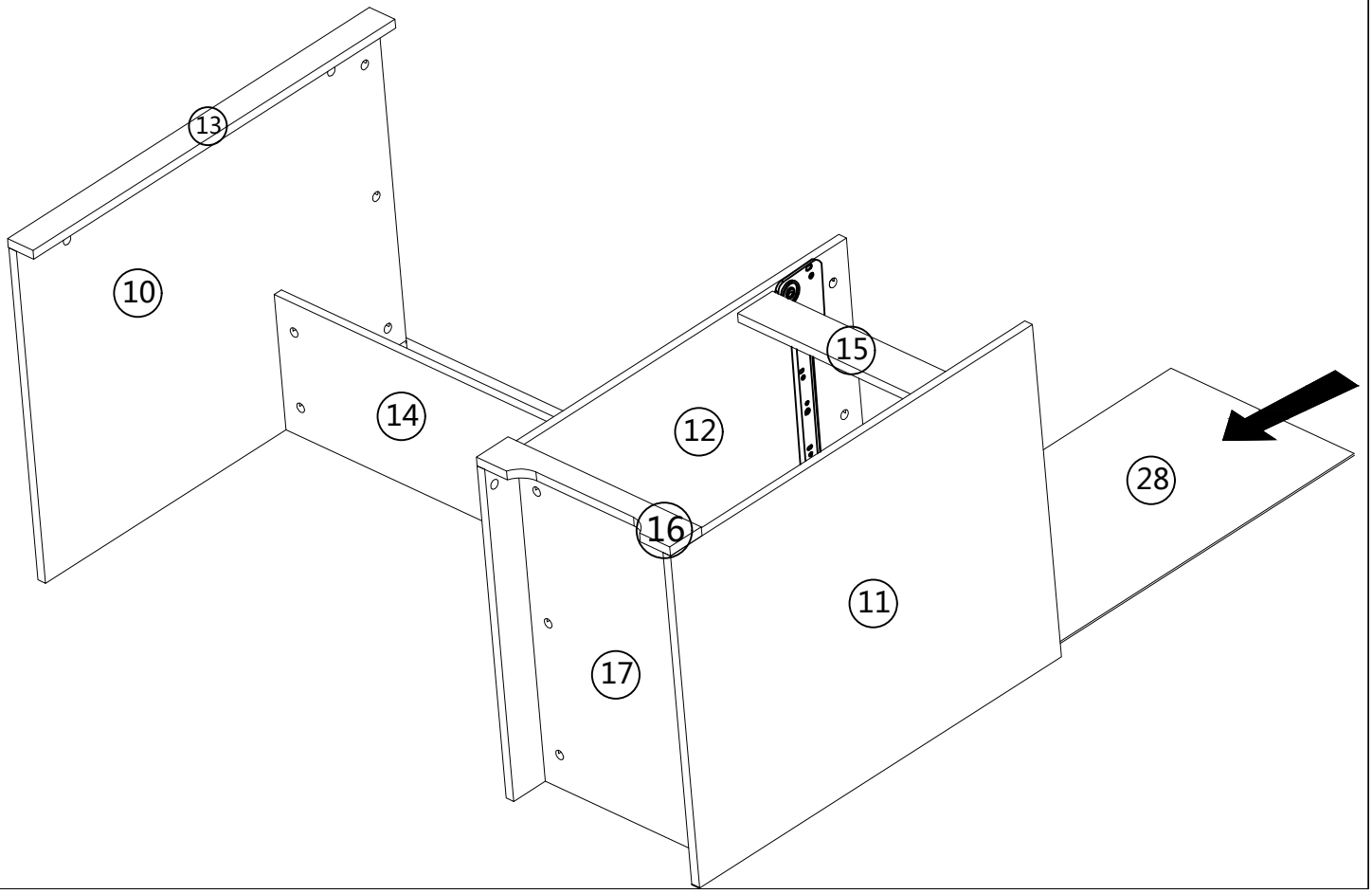

STEP 33

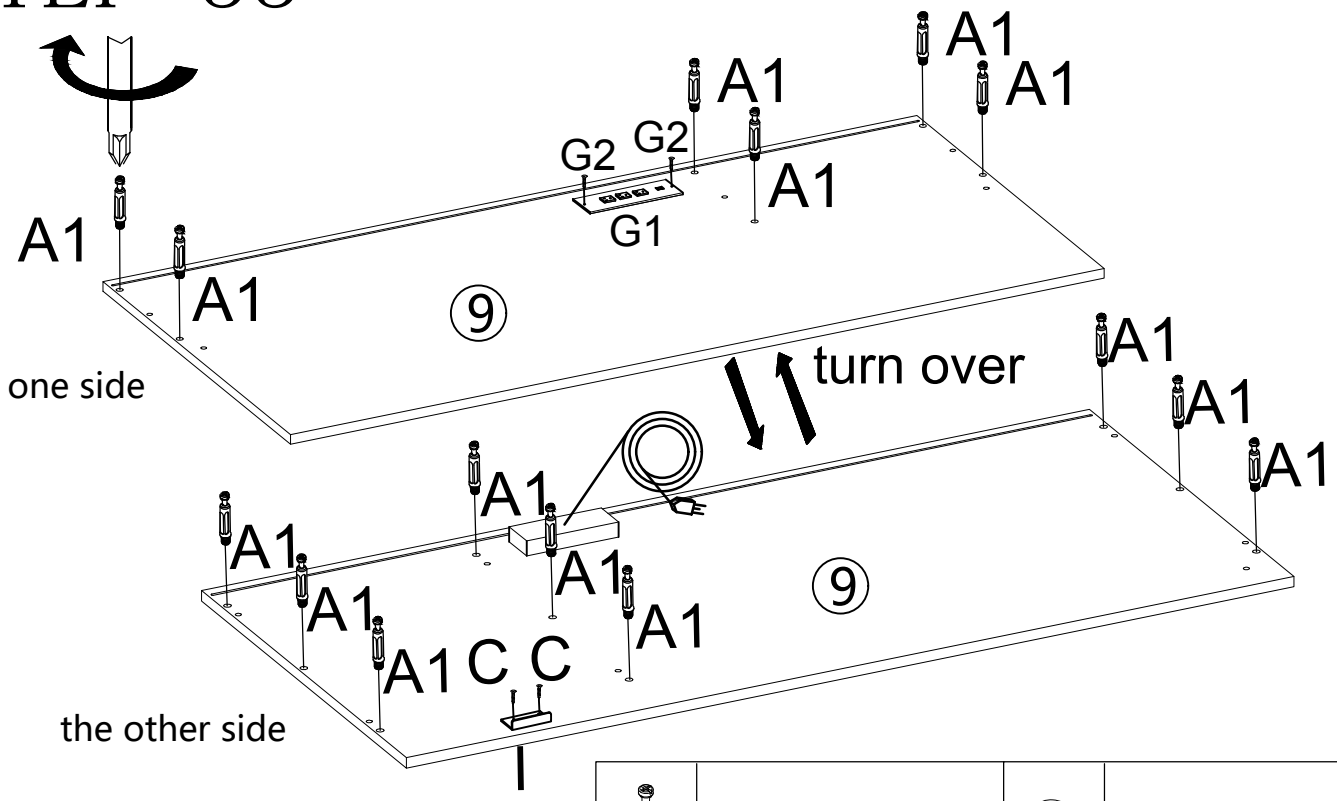

	A1×15PCS		C×2PCS
	G×1PC		I×1PC

STEP 34

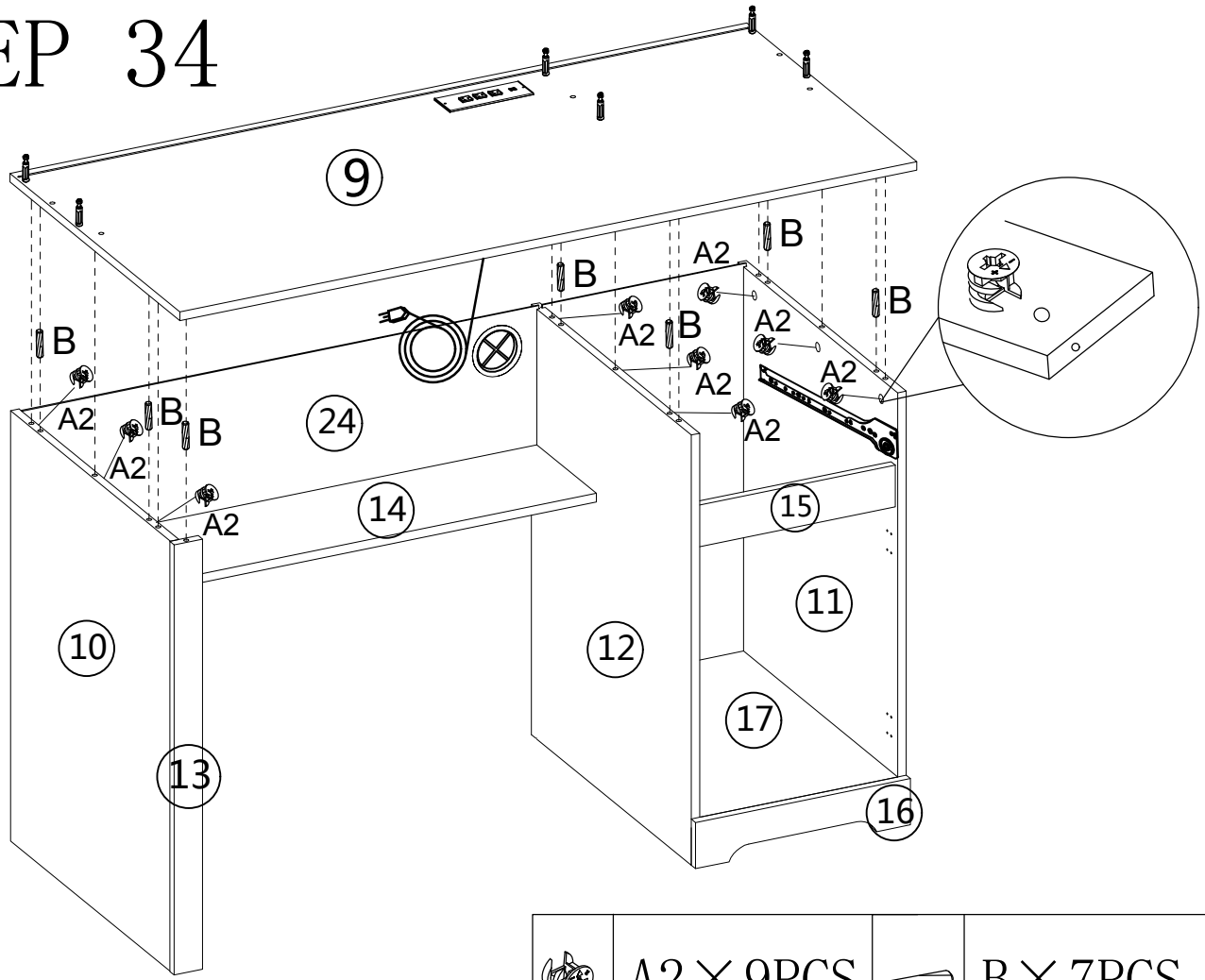

	A2×9PCS		B×7PCS

STEP 35

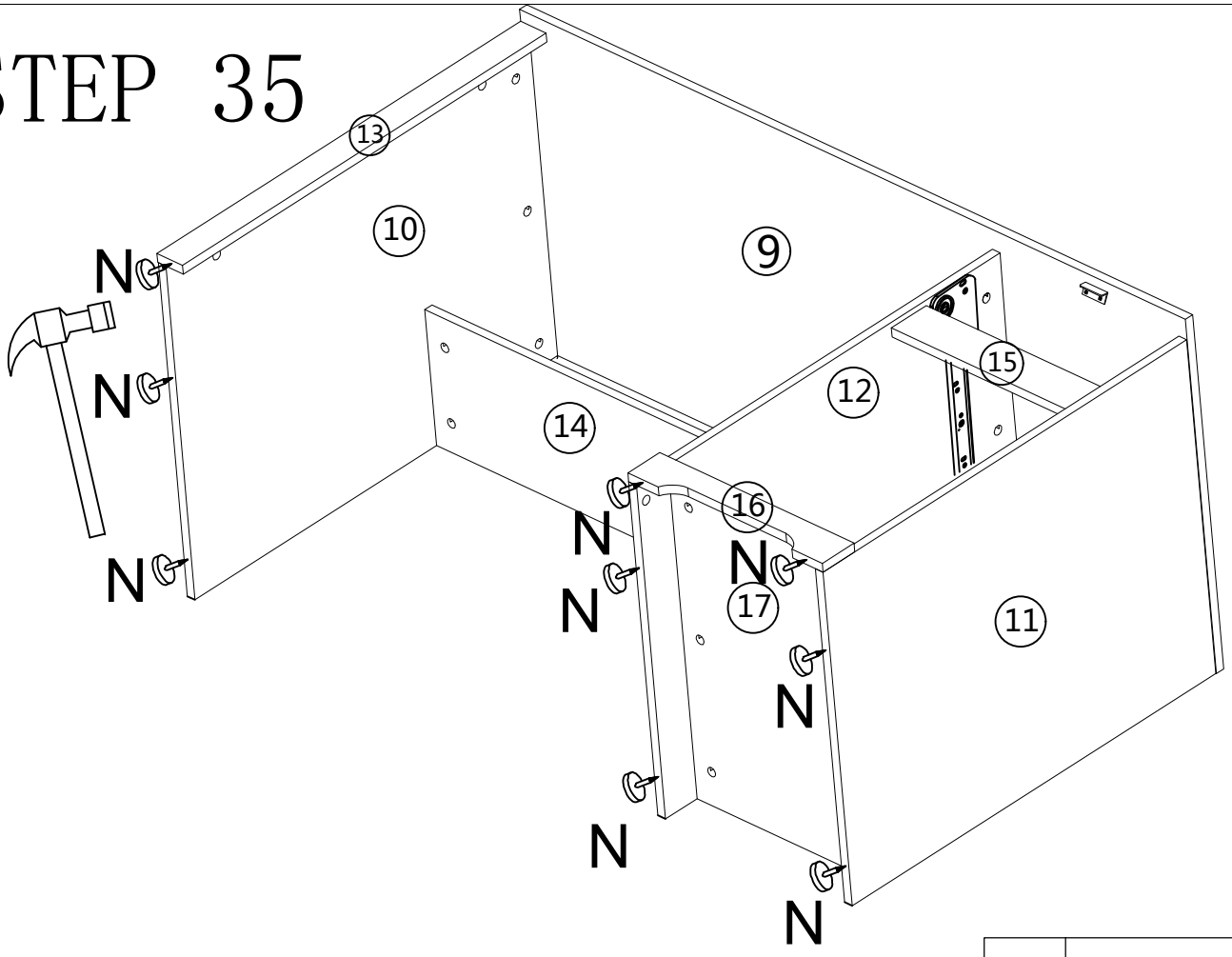

	N×9PCS

STEP 36

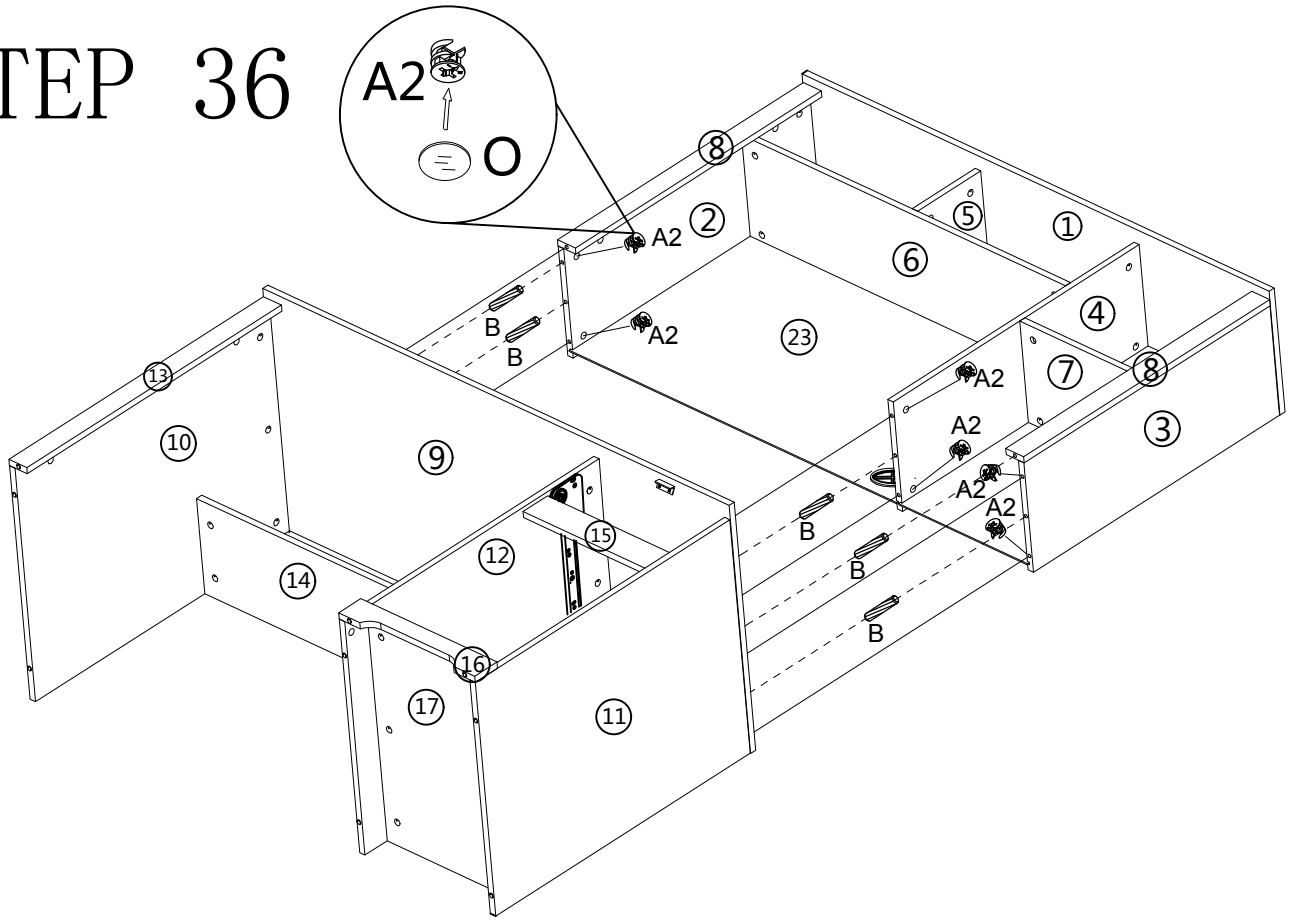

	A2×6PCS		B×5PCS		0×53PCS

STEP 37

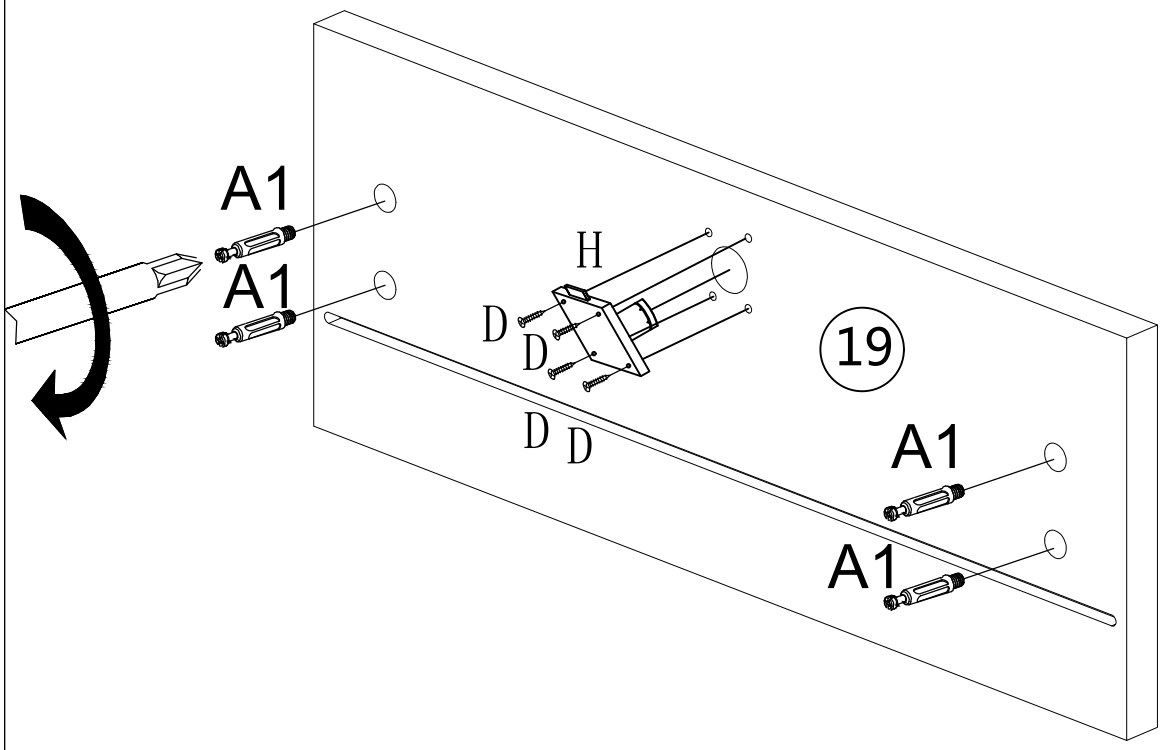

	A1×4PCS		D×4PCS	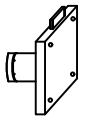	H×1PC

STEP 38

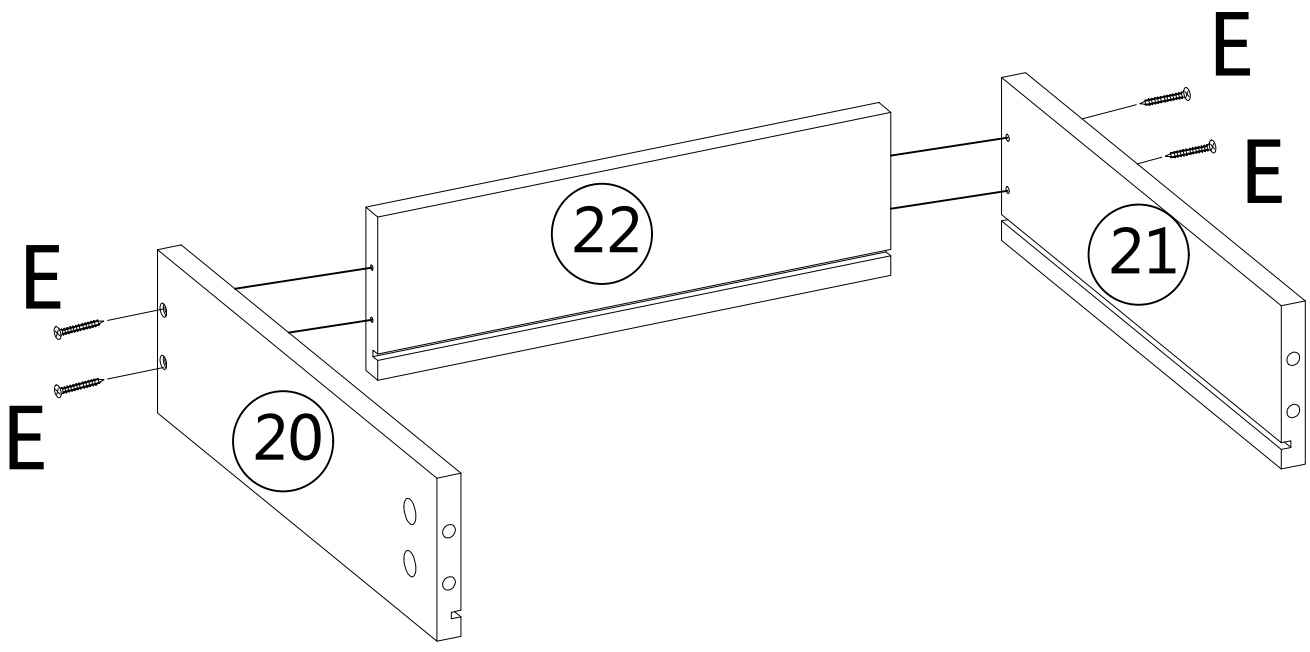

	E×4PCS

STEP 39

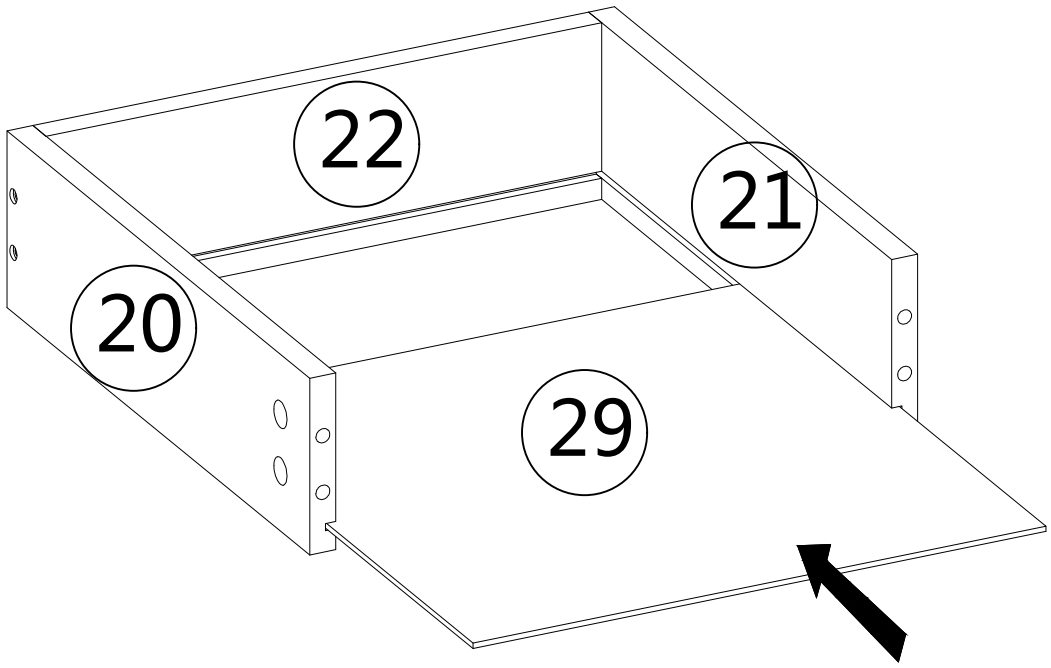

STEP 40

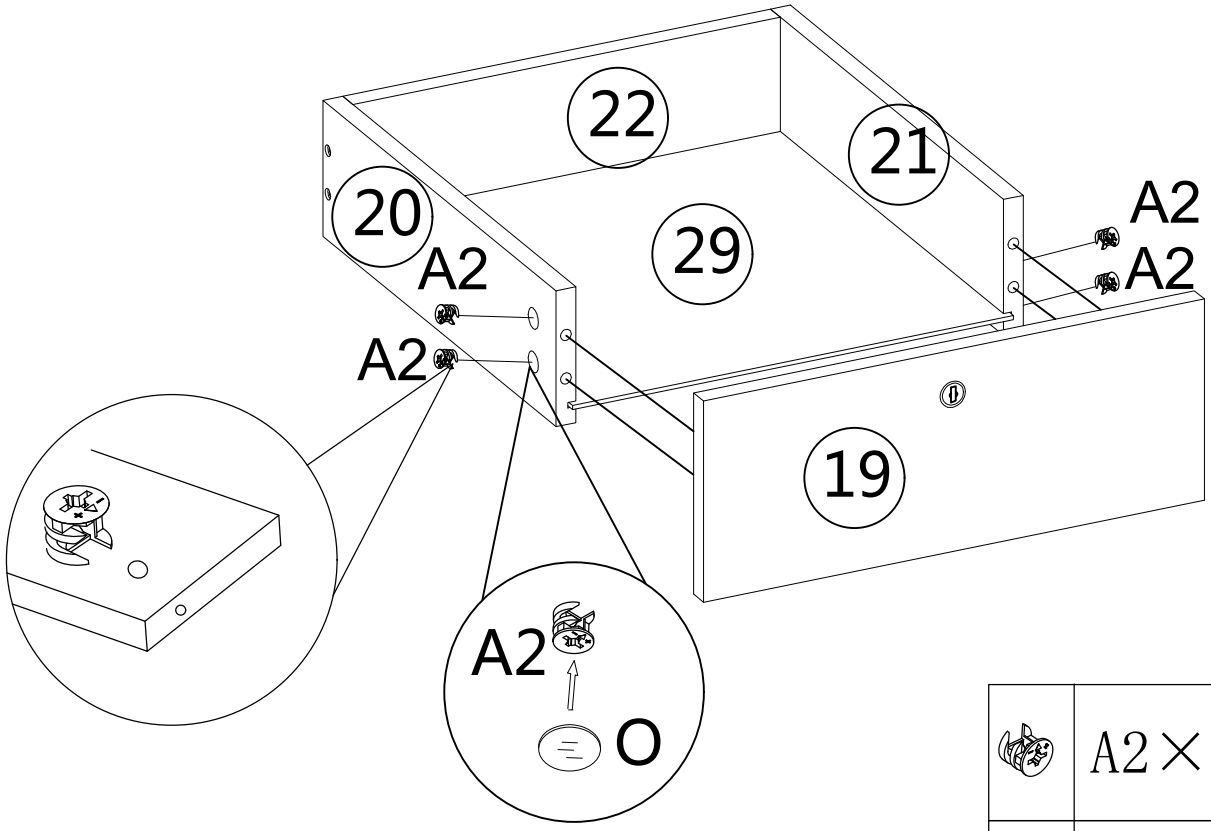

	A2×4PCS
	0×4PCS

STEP 41

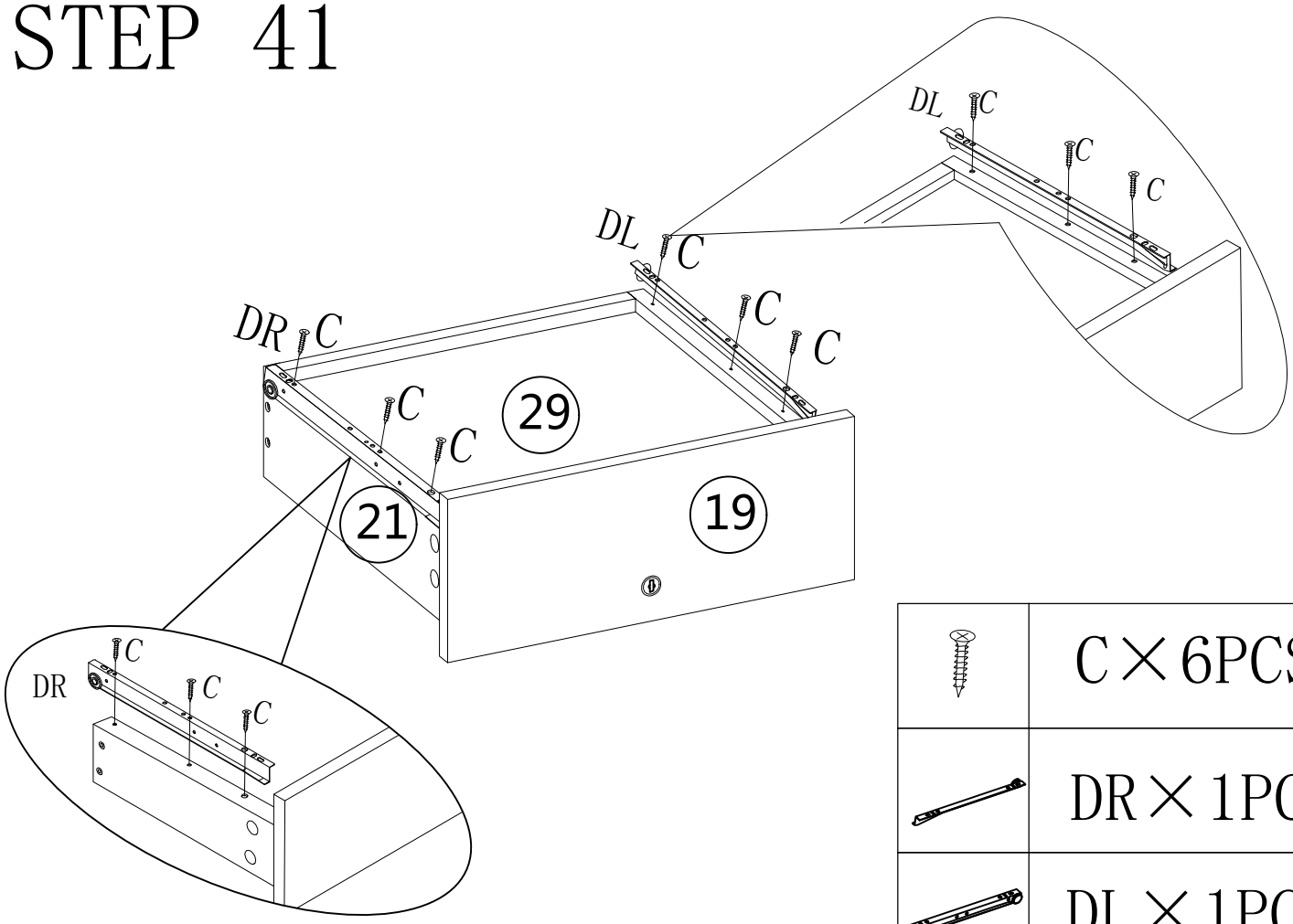

	C×6PCS
	DR×1PC
	DL×1PC

STEP 42

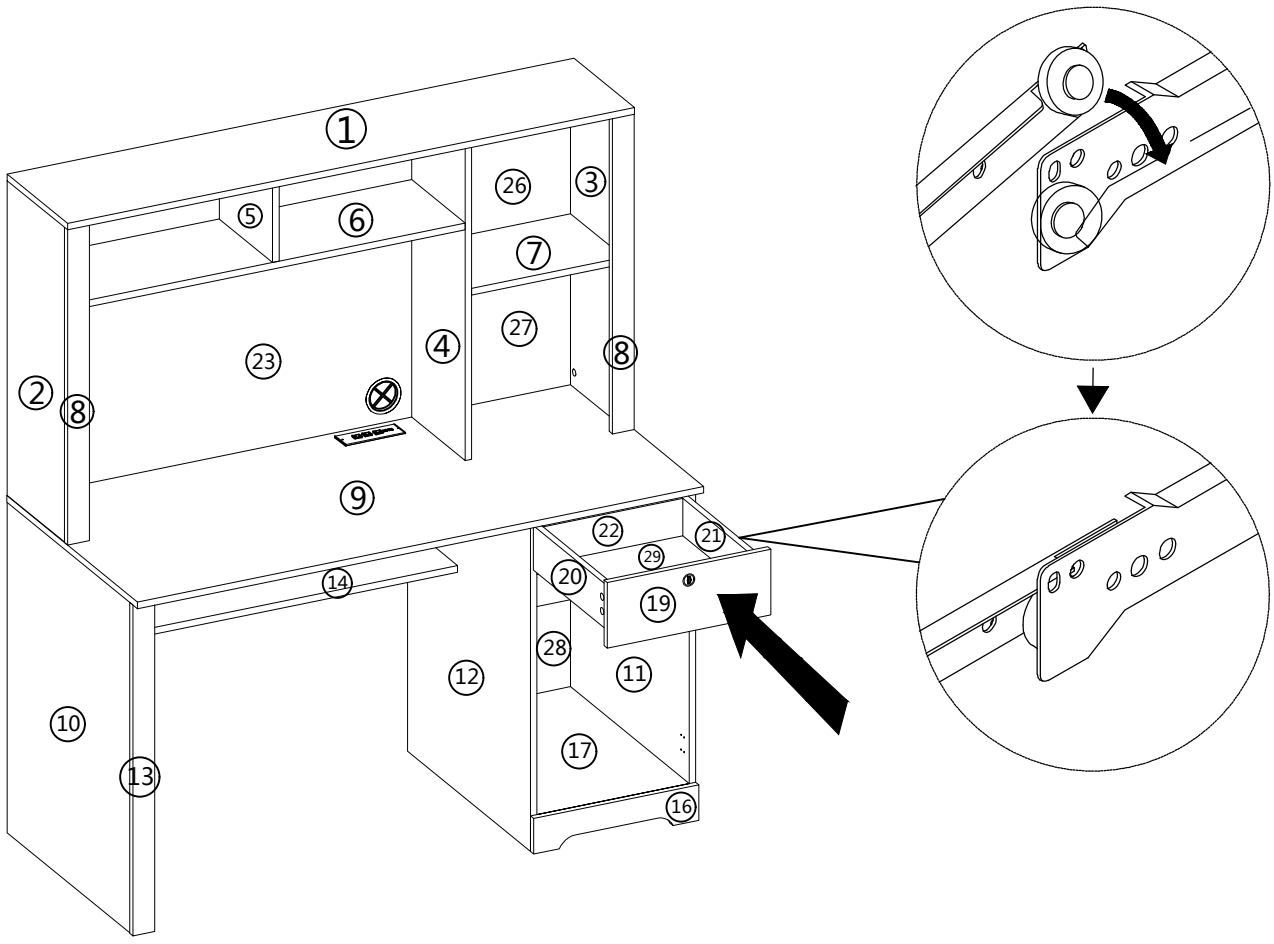

STEP 43

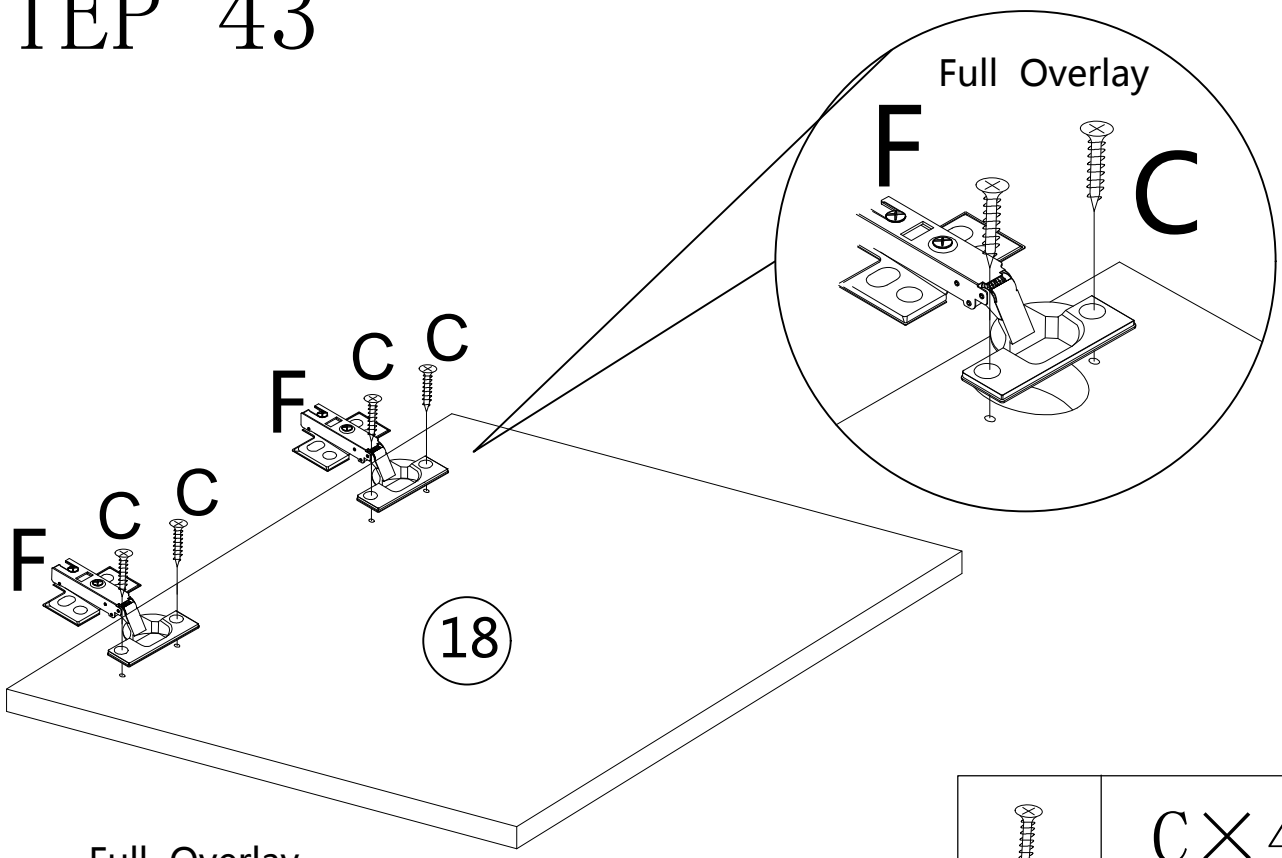

	C×4PCS
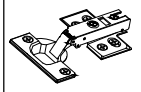	F×2PCS

STEP 44

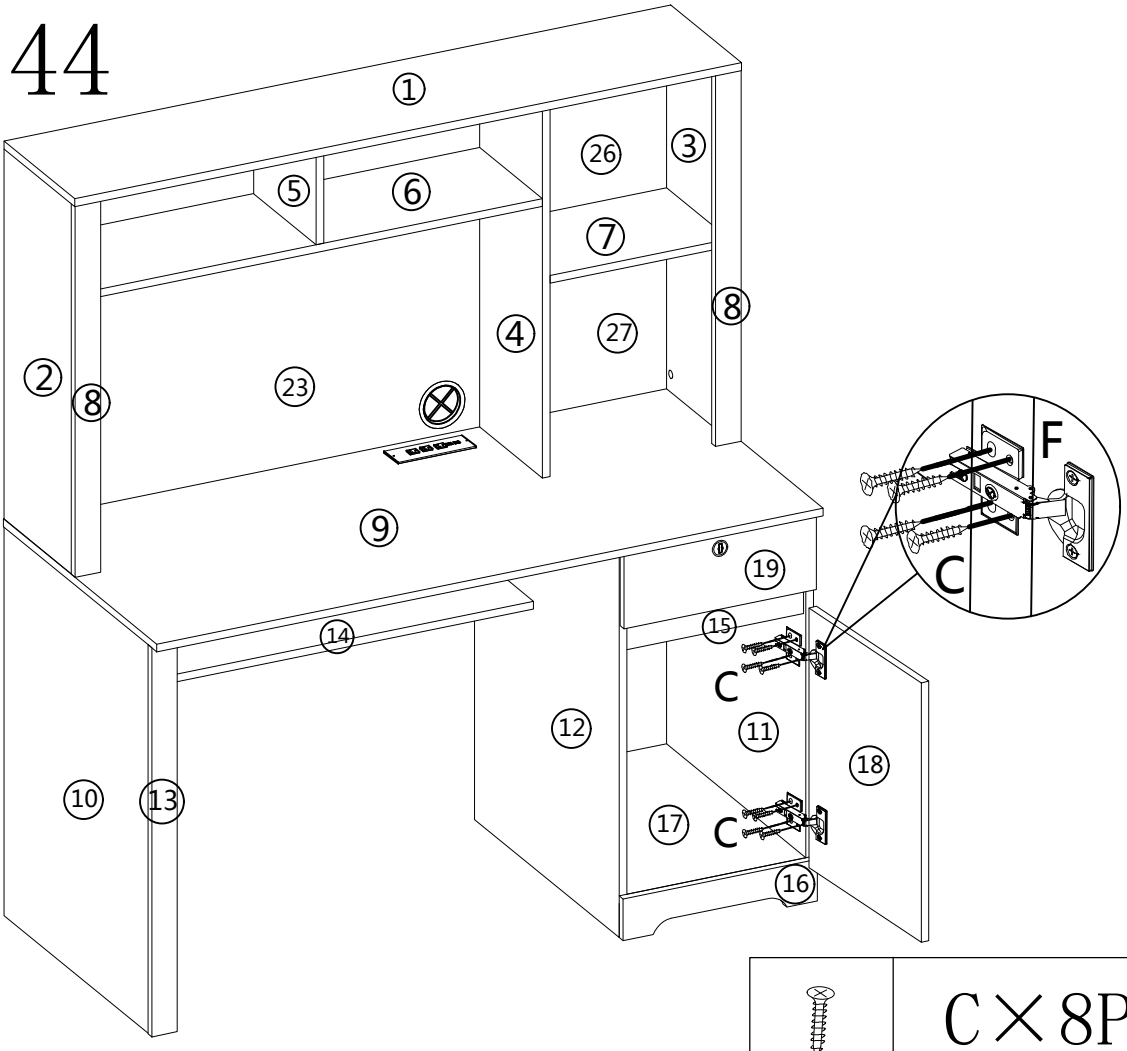

	C×8PCS

STEP 45

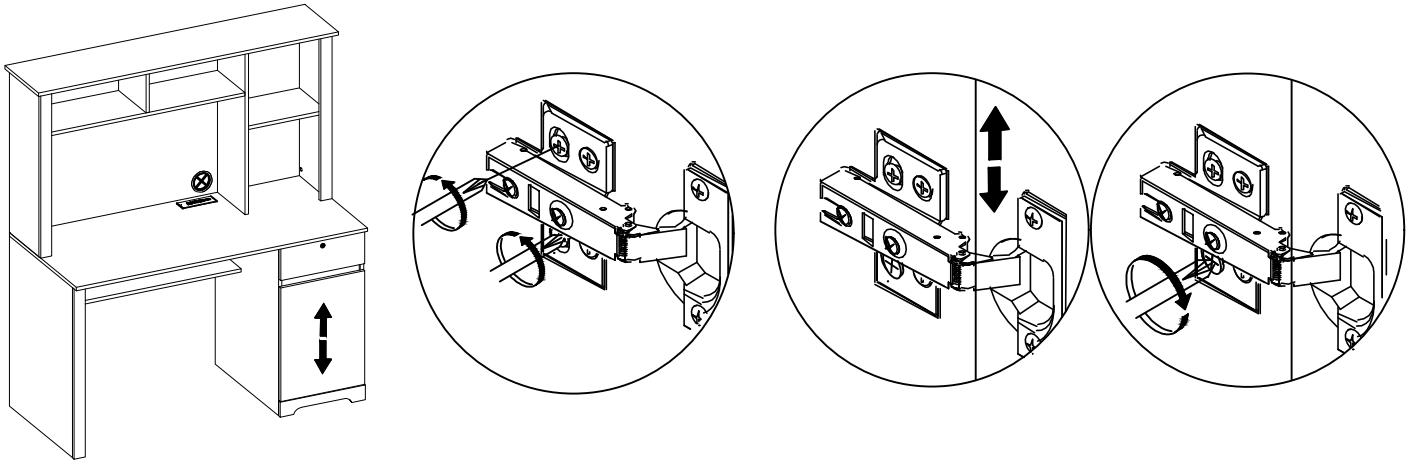

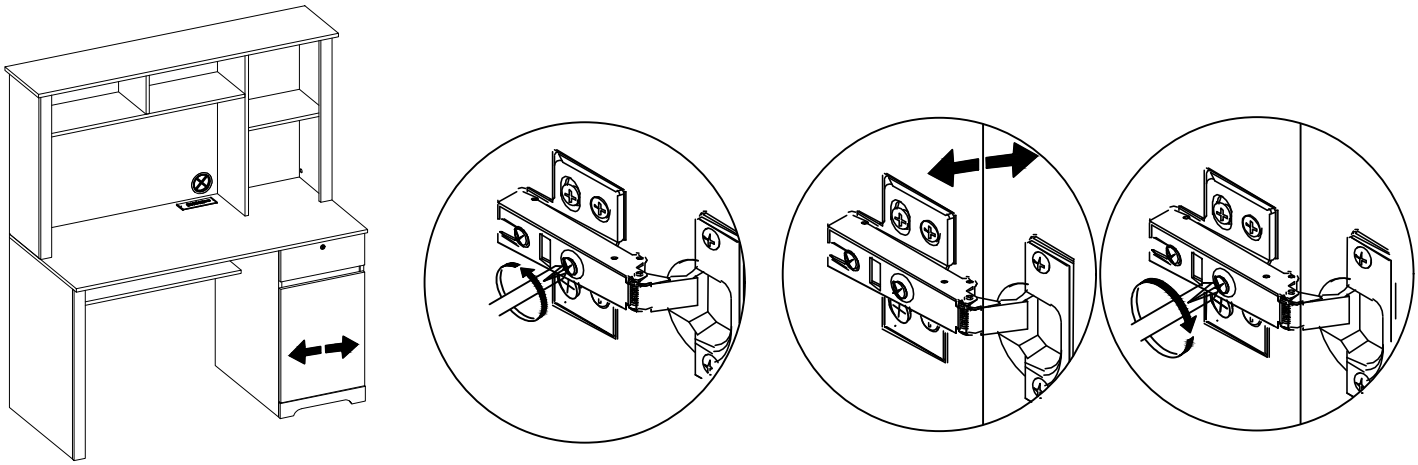

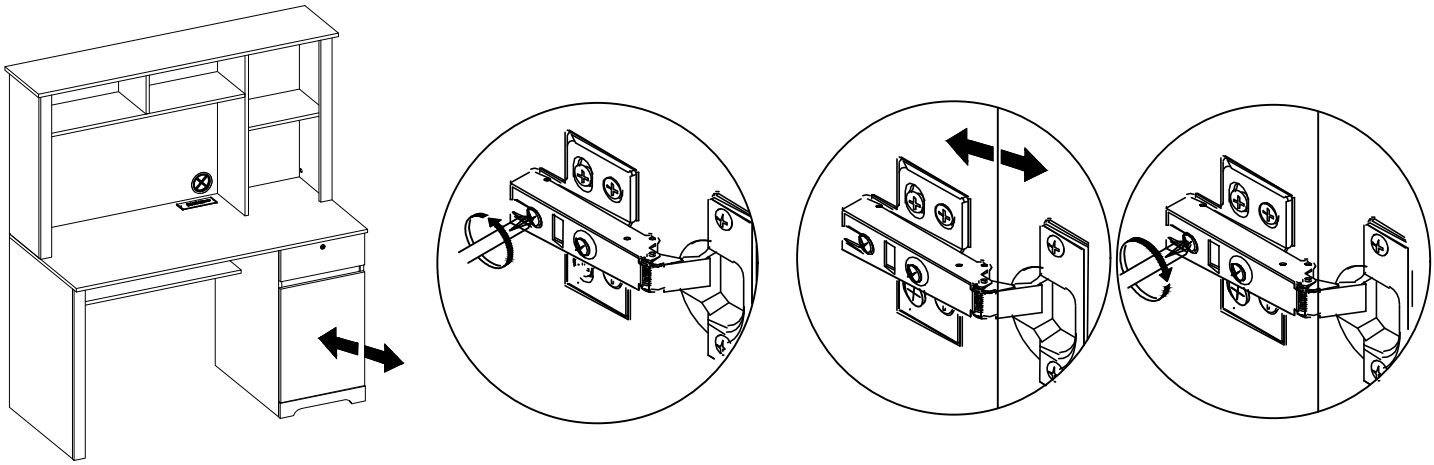

STEP 46

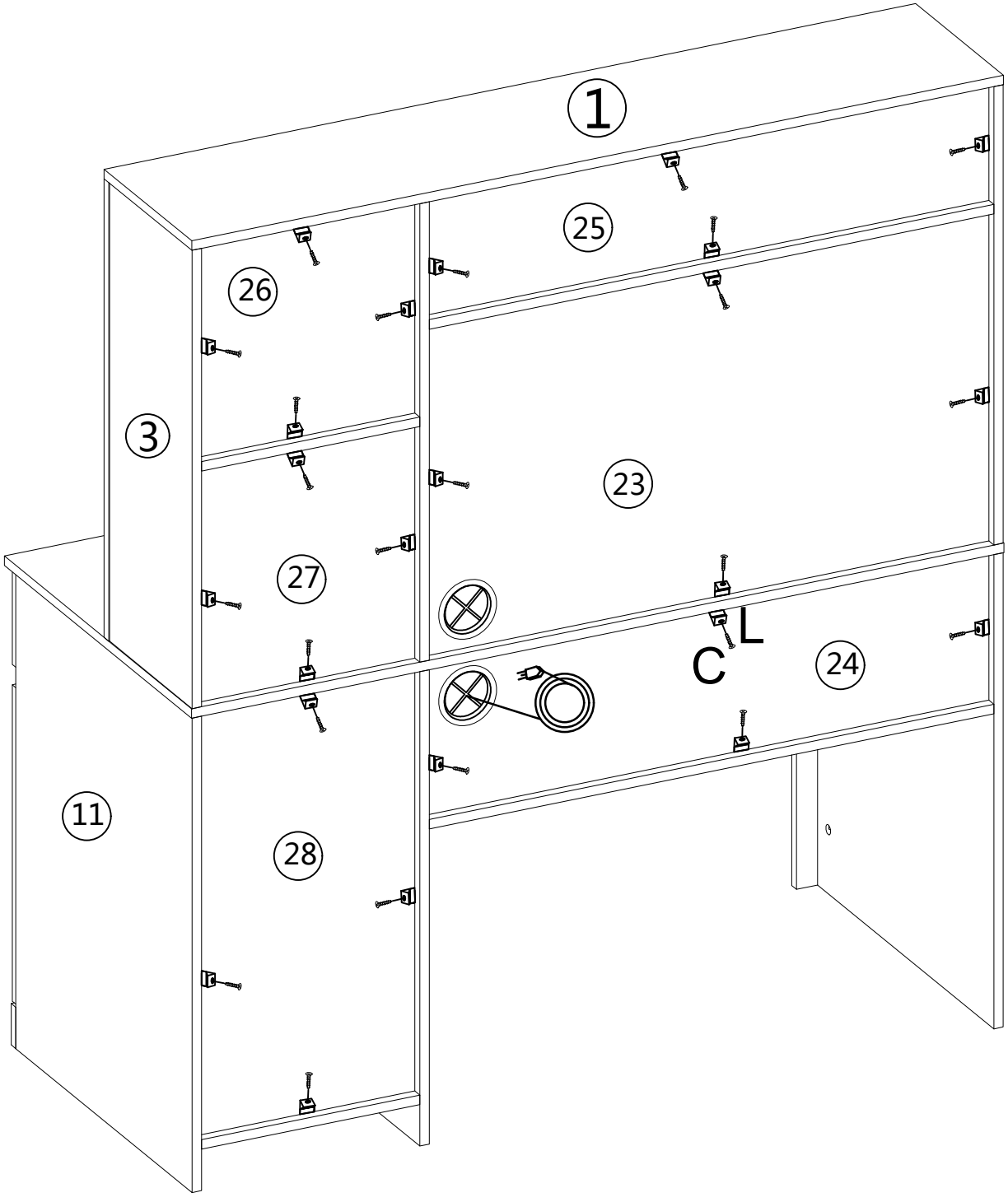

	C×24PCS
	L×24PCS

STEP 47

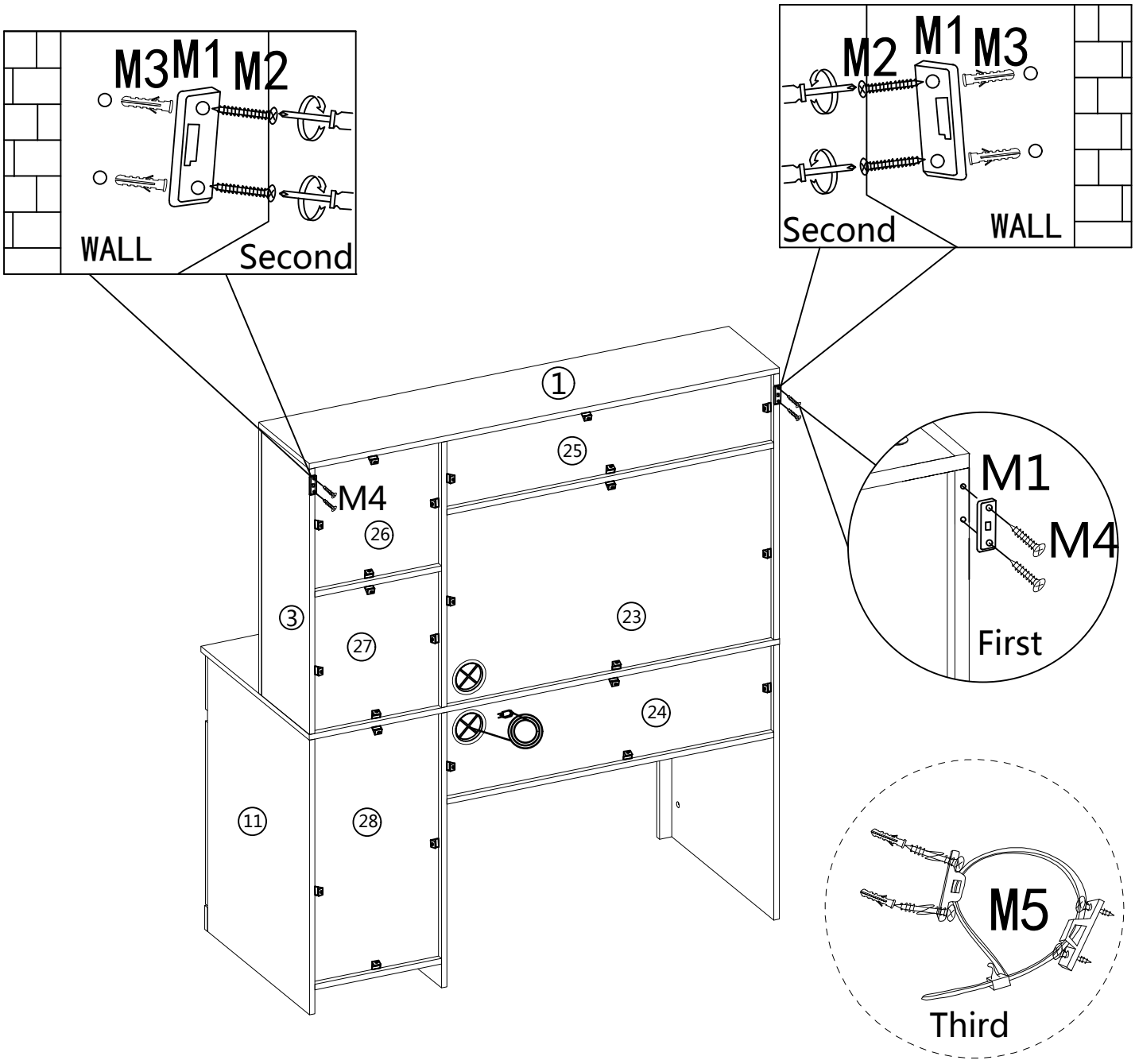

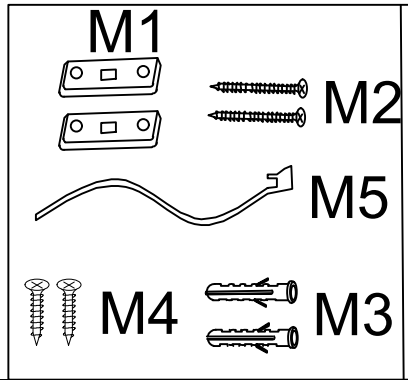

M1×4PCS
M2×4PCS
M3×4PCS
M4×4PCS
M5×2PCS

END

