ITEM NO.	PART NUMBER	DESCRIPTION	QTY.
1	HB1T-1	Hub	2
2	BL1T-34	End Ball	2
3	PSRD8-12	BASE	2
4	TU34-2.5	TUBE	1

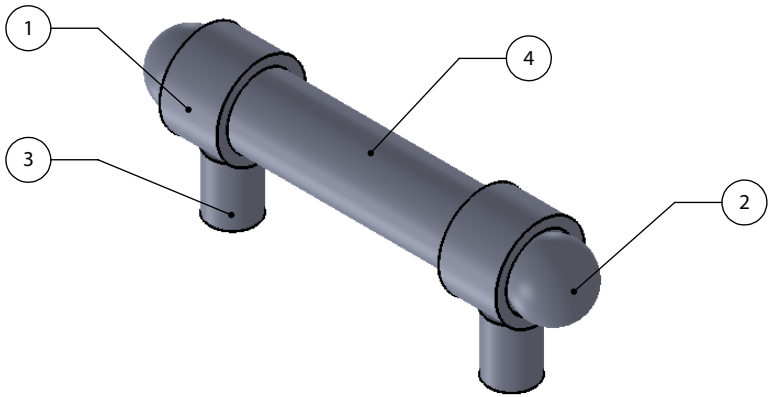

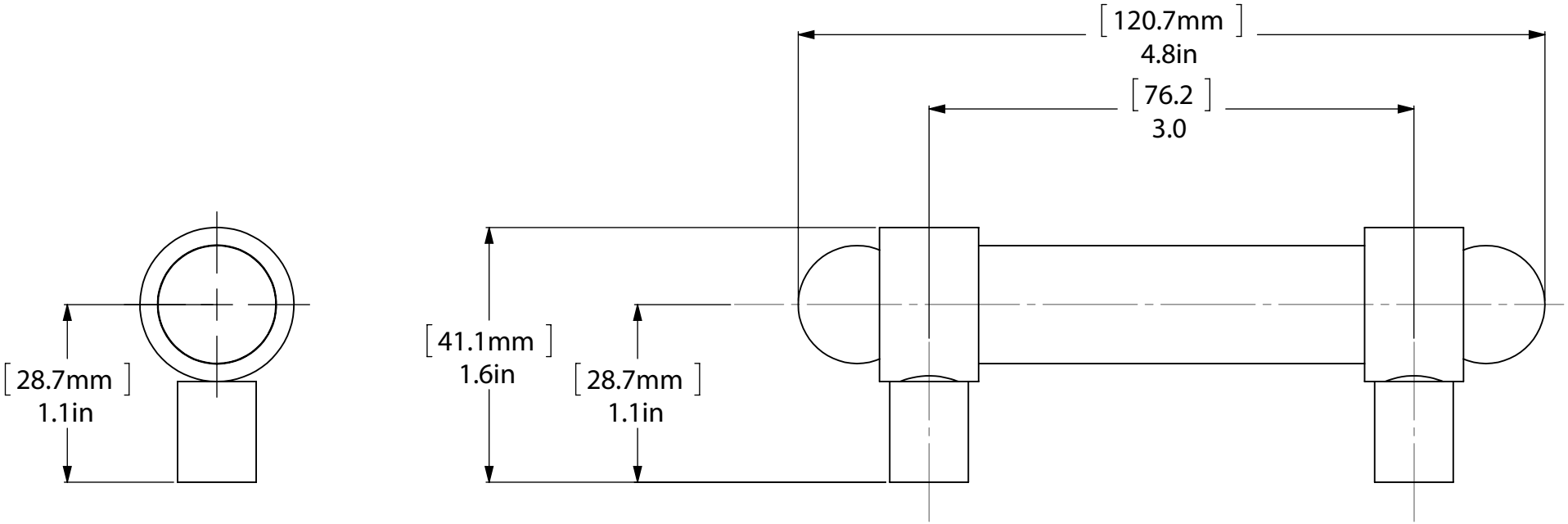

UNLESS OTHERWISE STATED				INITIALS	DATE	ITEM	QTY	DRG/PART NO	CLIENT:			
DO NOT SCALE DRAWING	X.XXX	+/-0.025	DESIGNED		IJM	MATERIAL		BRASS	WEIGHT		FINISH	TBD
CHAMFER ALL EDGES 0.5X45°	X.XX	+/-0.1	DRAWN		IJM	HEAT TREAT		NA			QUANTITY	
DRAWING ISO	X.X	+/-0.25	CHECKED		R. ANDRIS	CUSTOMER			CUSTOMER No		---	
	X	+/-0.75	PROJ.ENG			DESCRIPTION:					DRAWING No.	REV
	ANGLES		SAFETY									0
	X.XX	+/-0.05°	APPROVED		R. ANDRIS							
	X.X	+/-0.5°	FILENAME								SCALE 1:1	SHEET: 01 A4
	X	+/-0.5°										
FIRST ANGLE PROJECTION	MACHINED FINISH	3.2										