USER'S MANUAL

Product Name: **Pool Lounge Chair**

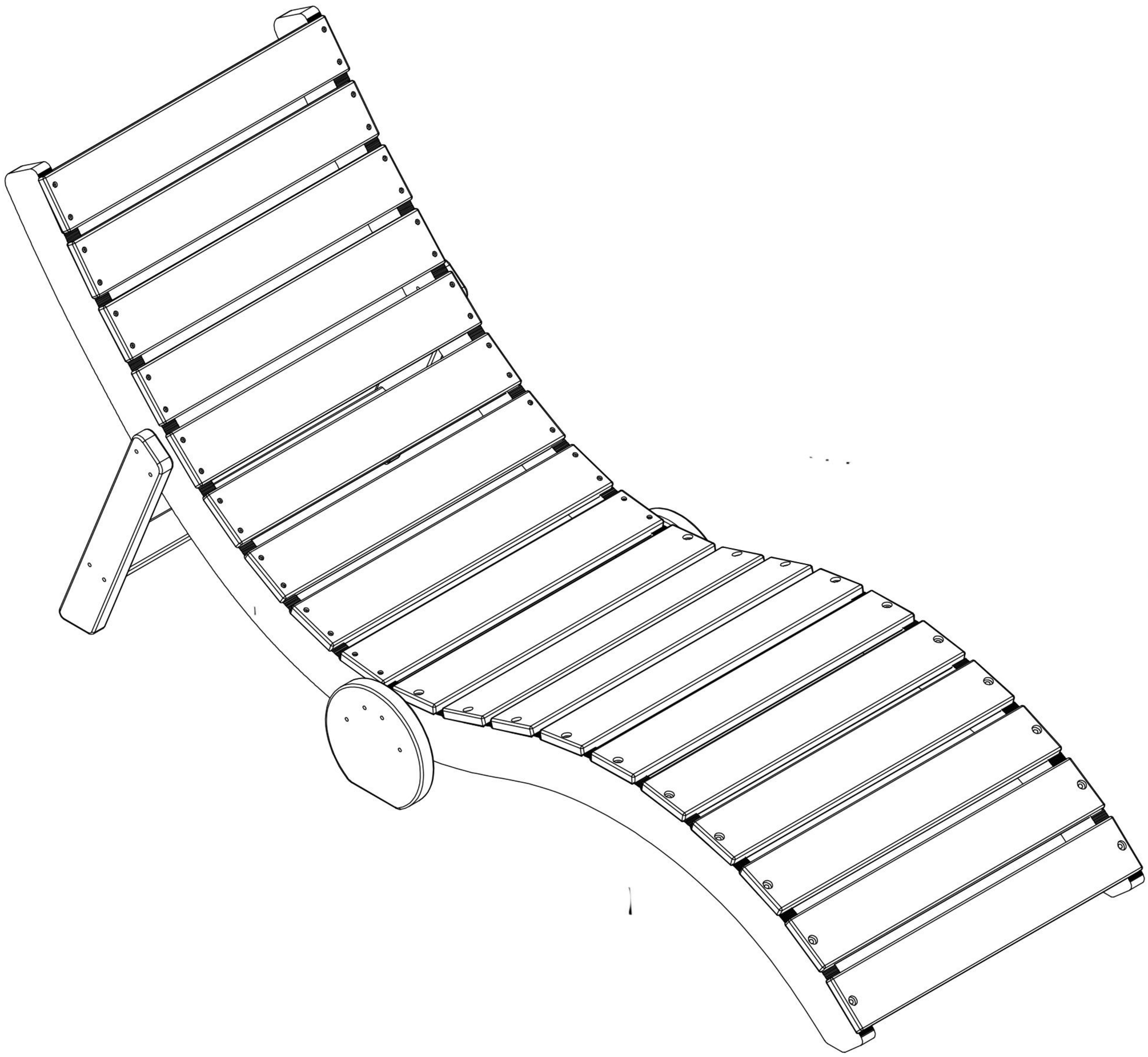

THIS INSTRUCTION BOOKLET CONTAINS **IMPORTANT SAFETY INFORMATION**.
PLEASE READ AND KEEP FOR FUTURE REFERENCE.

Thank you

Thank you for choosing us.

We hope your new furniture helps create a gathering place for you and your loved ones to enjoy for many years to come!

Contact Us

Question? Concerns? We'd love to hear them!

E-mail: jinmai211211@gmail.com

We will reply within 24 business hours

Before You Start

- Please read all instructions carefully.
- Retain instructions for future reference.
- Seperate and count all parts and hardware.
- Read through each step carefully and follow the proper order.
- We recommend that, where possible, all items are assembled near to the area in which they will be placed in use, to avoid moving the product unnecessarily once assembled.
- Always place the product on a flat, steady and stable surface.
- Keep all small parts and packaging materials for this product away from babies and children.

KNOW YOUR PARTS

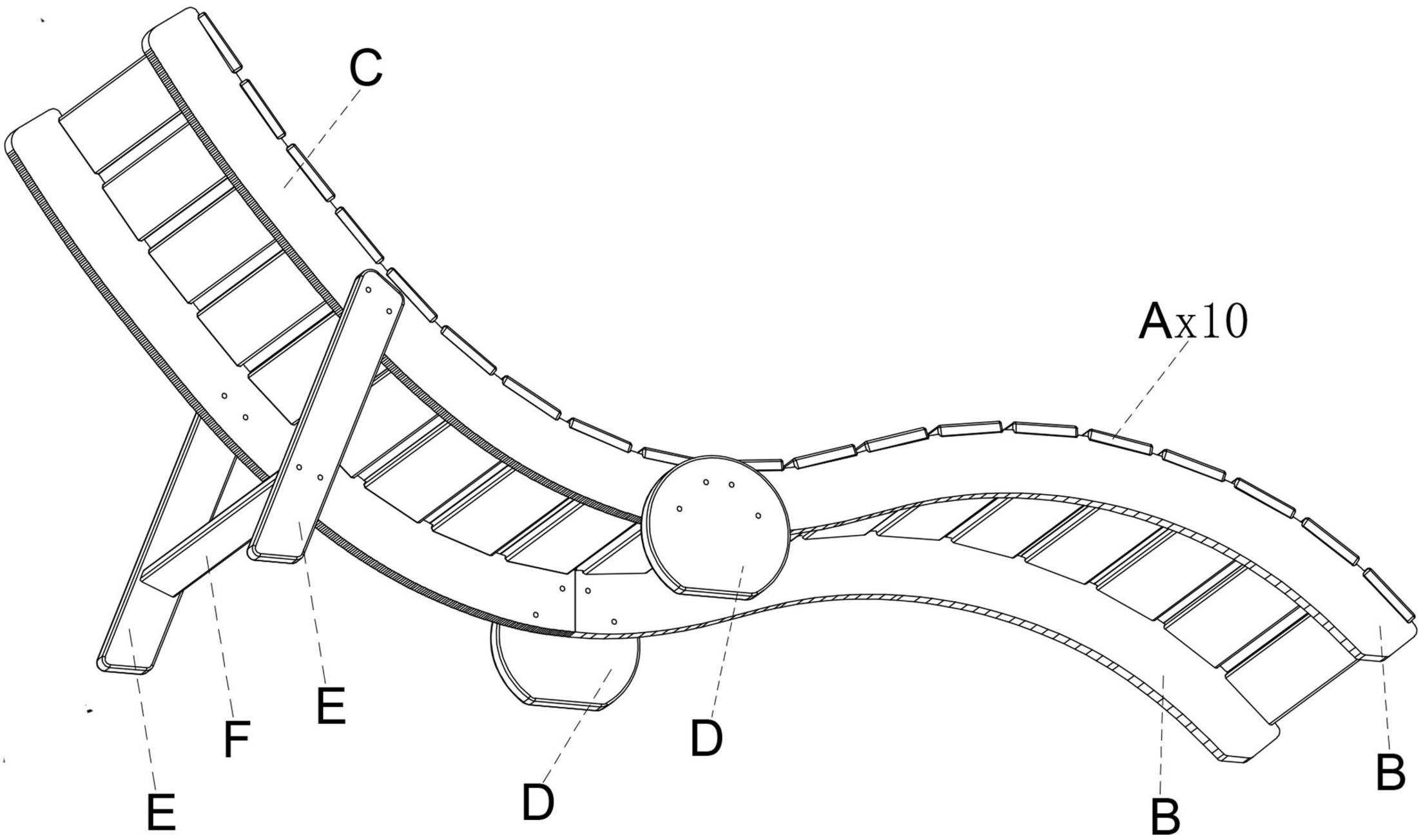

KNOW YOUR PARTS

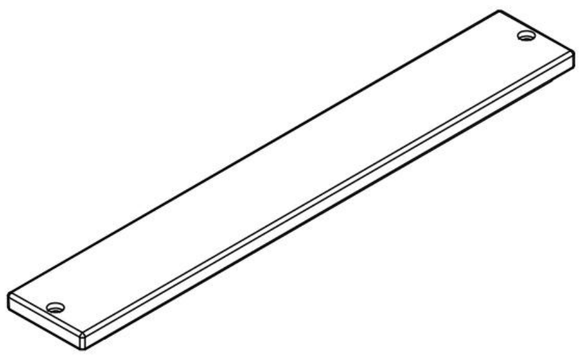

A x10

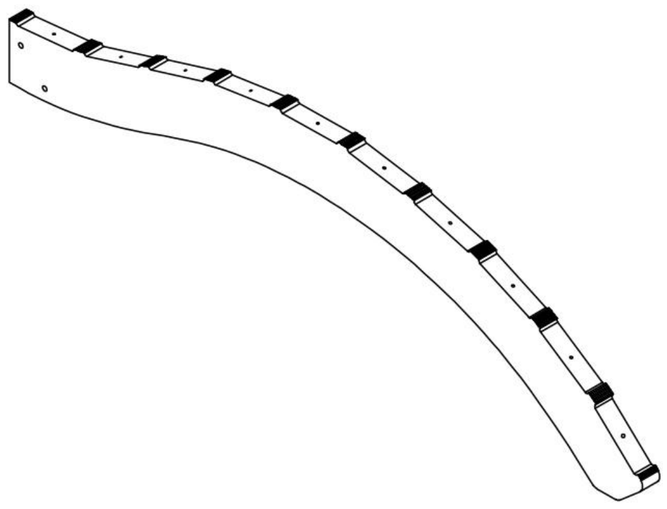

B x2

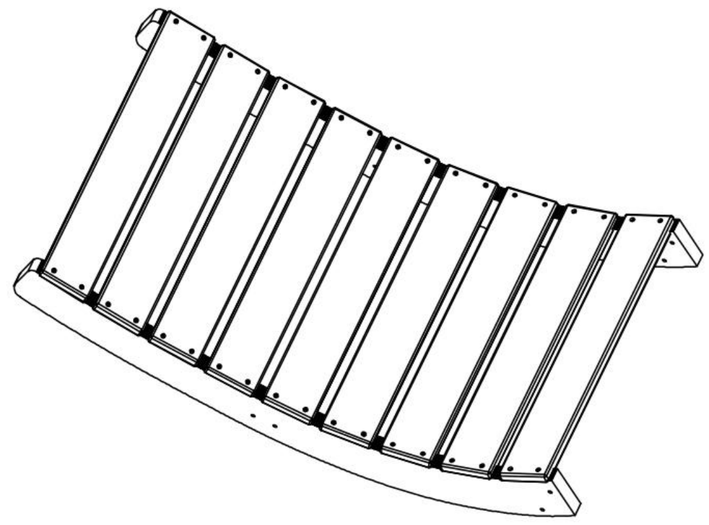

C x1

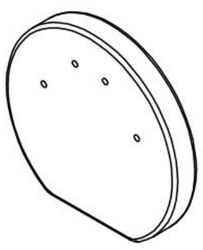

D x2

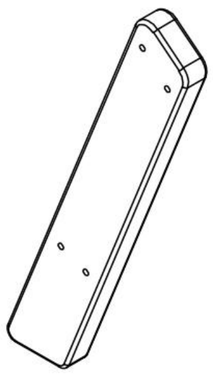

E x2

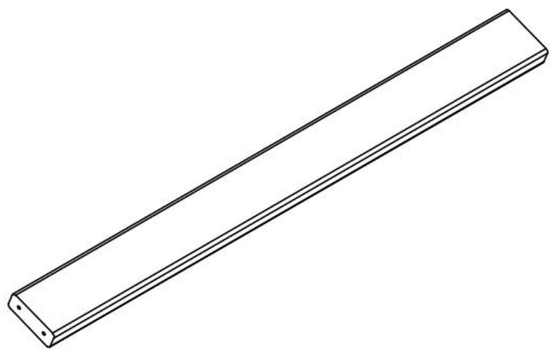

F x1

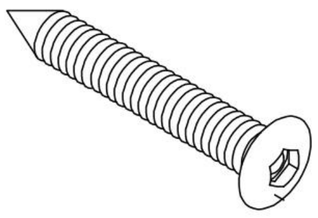

T (35mm)x20

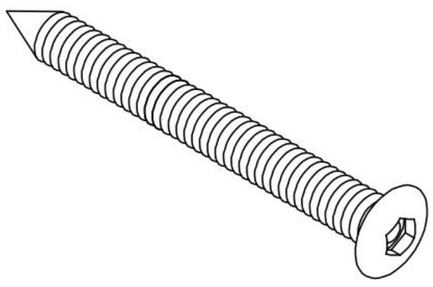

U (55mm)x4

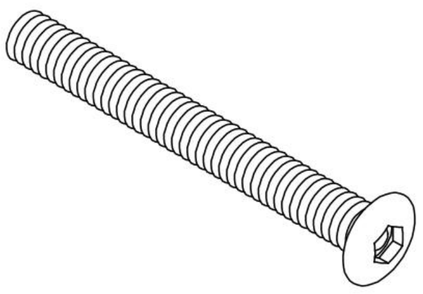

V (60mm)x12

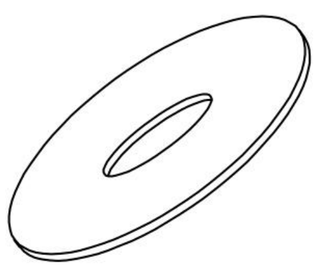

W x12

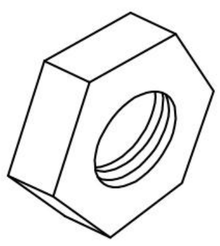

X x12

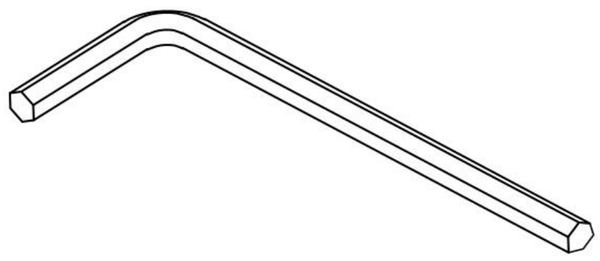

Y x1

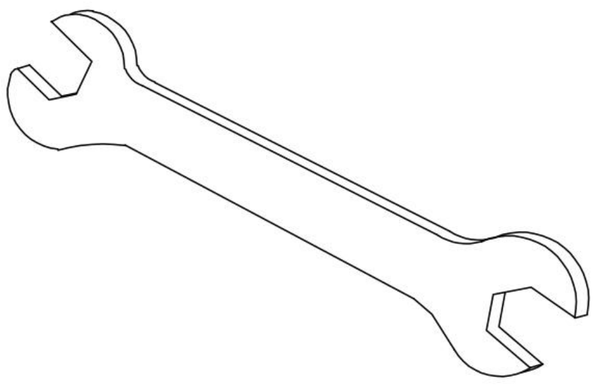

Z x1

Step 1:

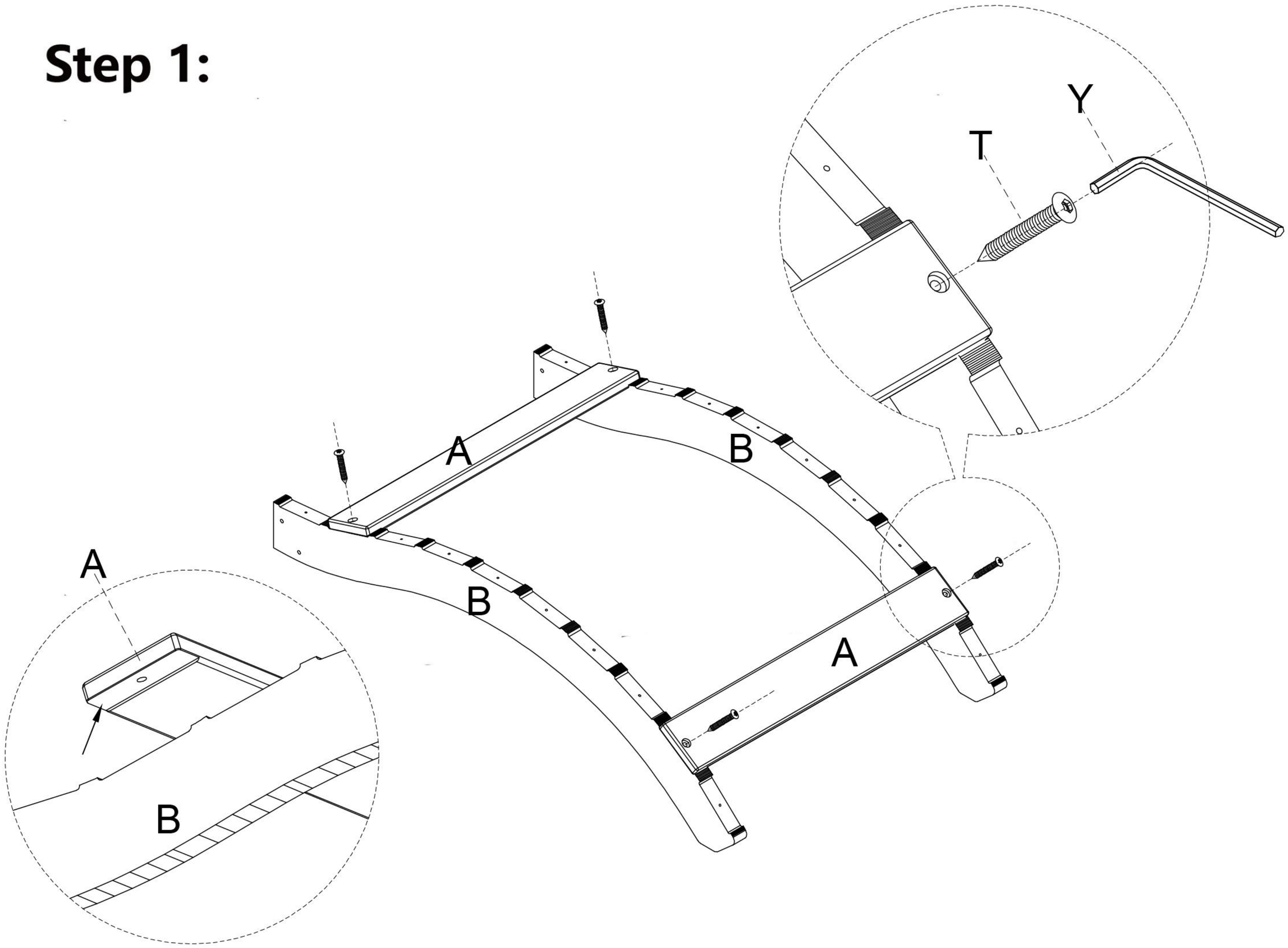

Step 2:

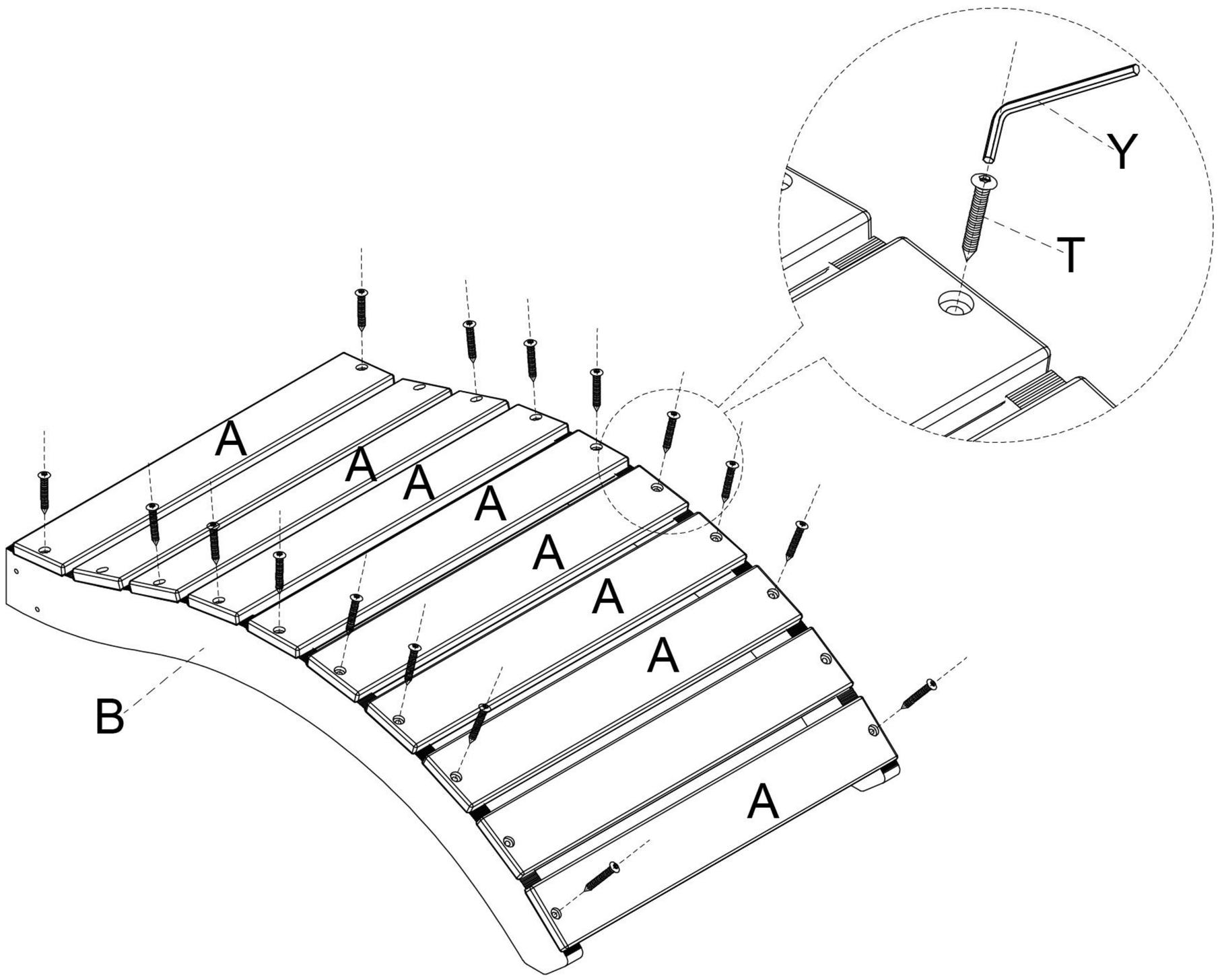

Step 3:

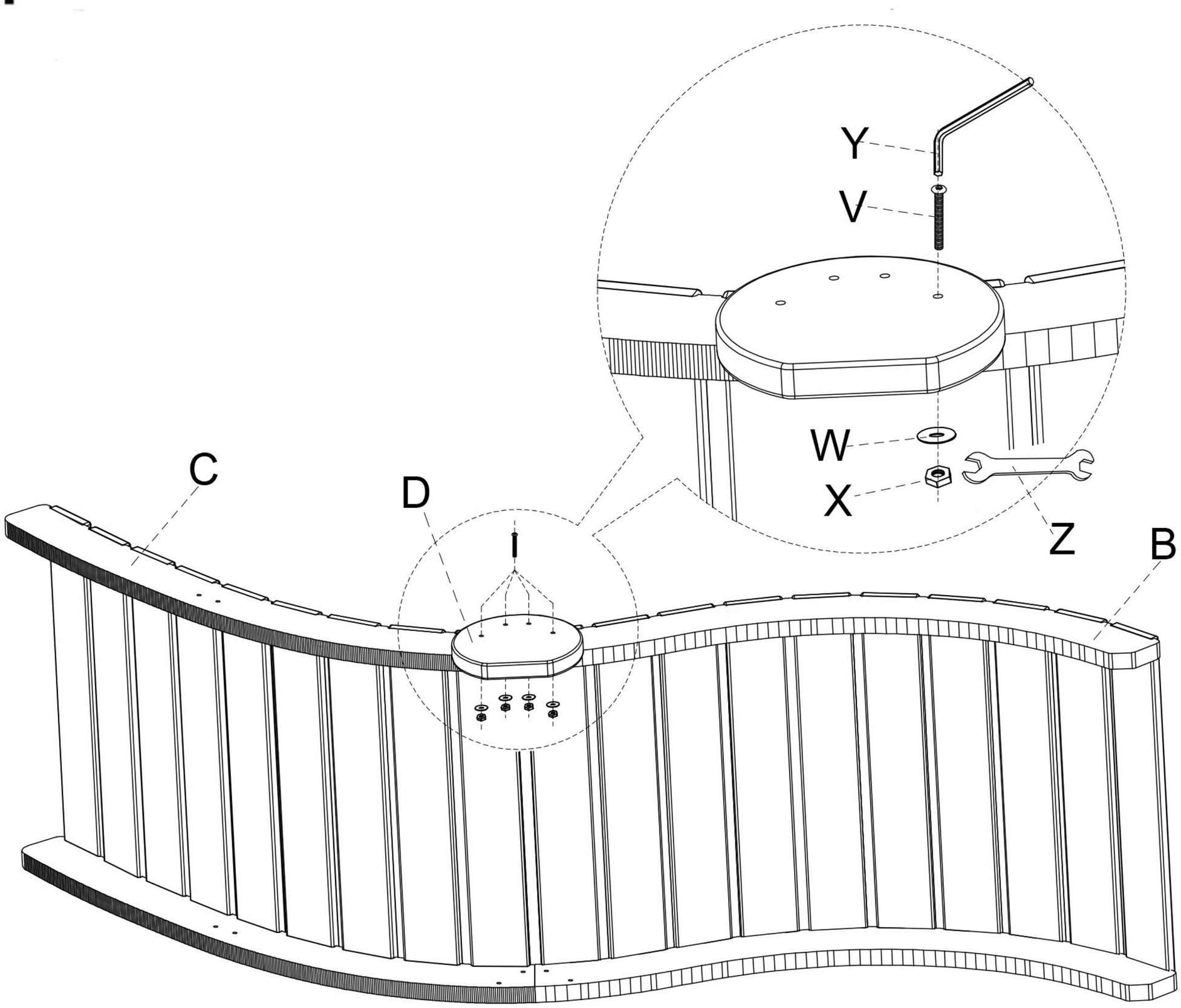

Step 4:

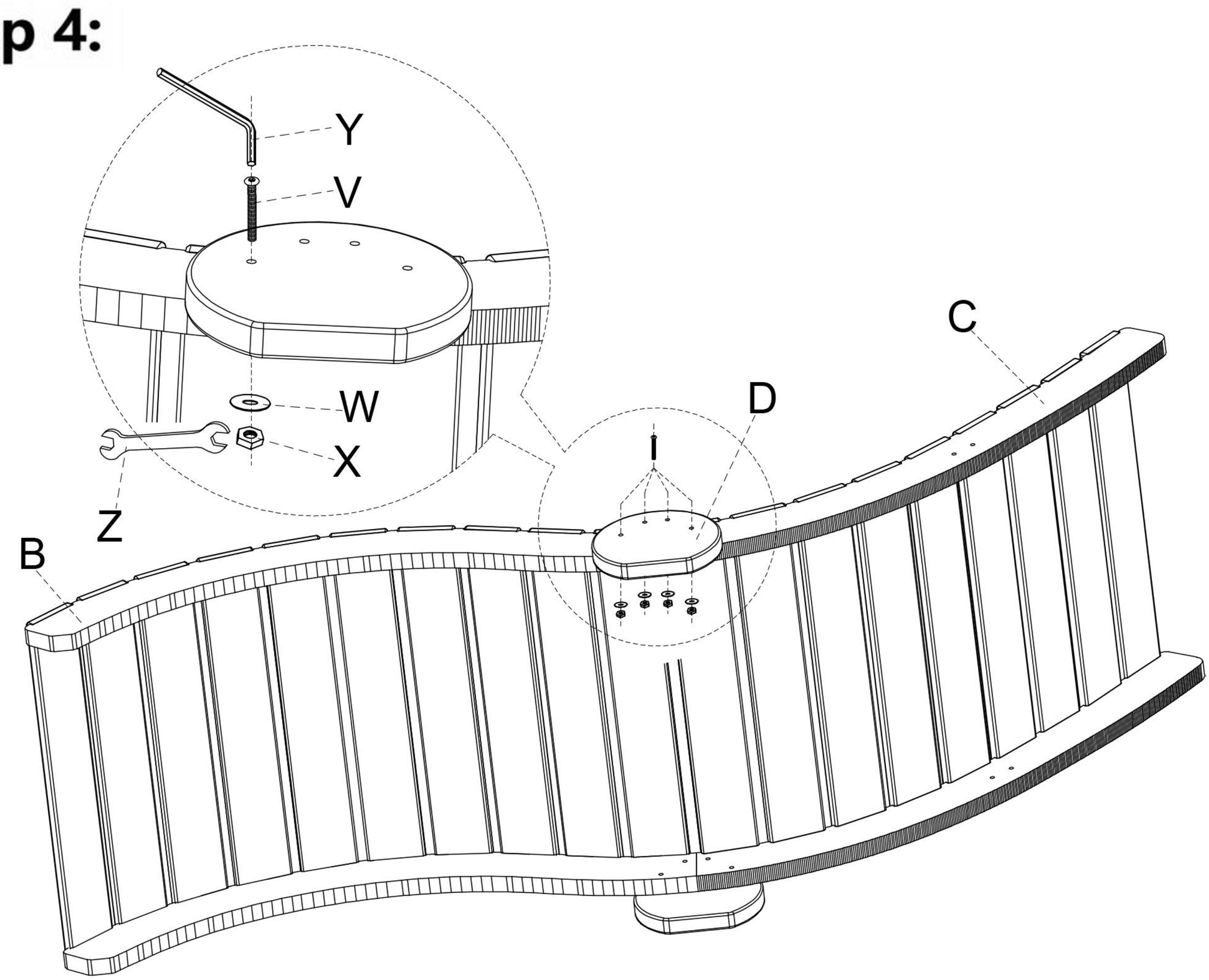

Step 5:

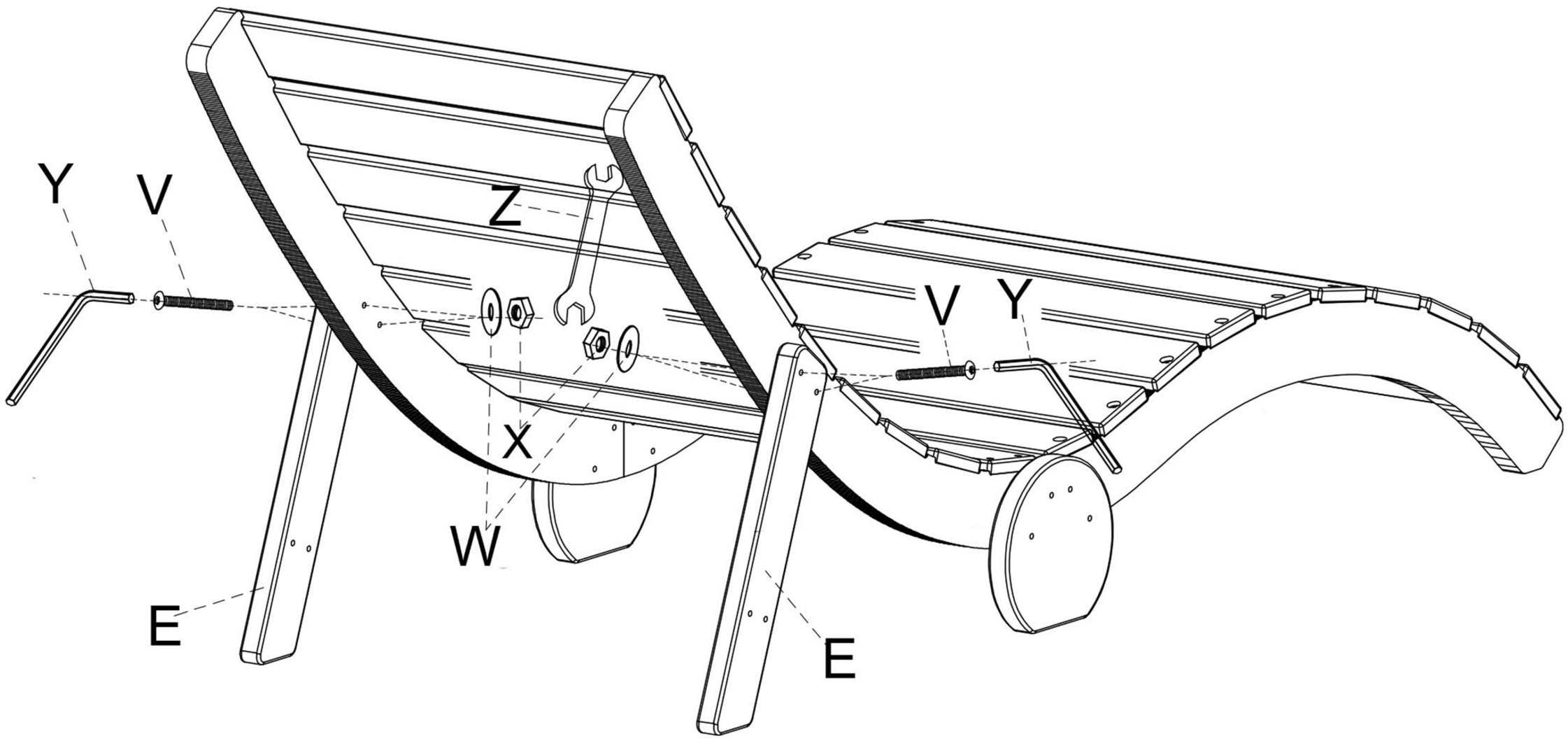

Step 6

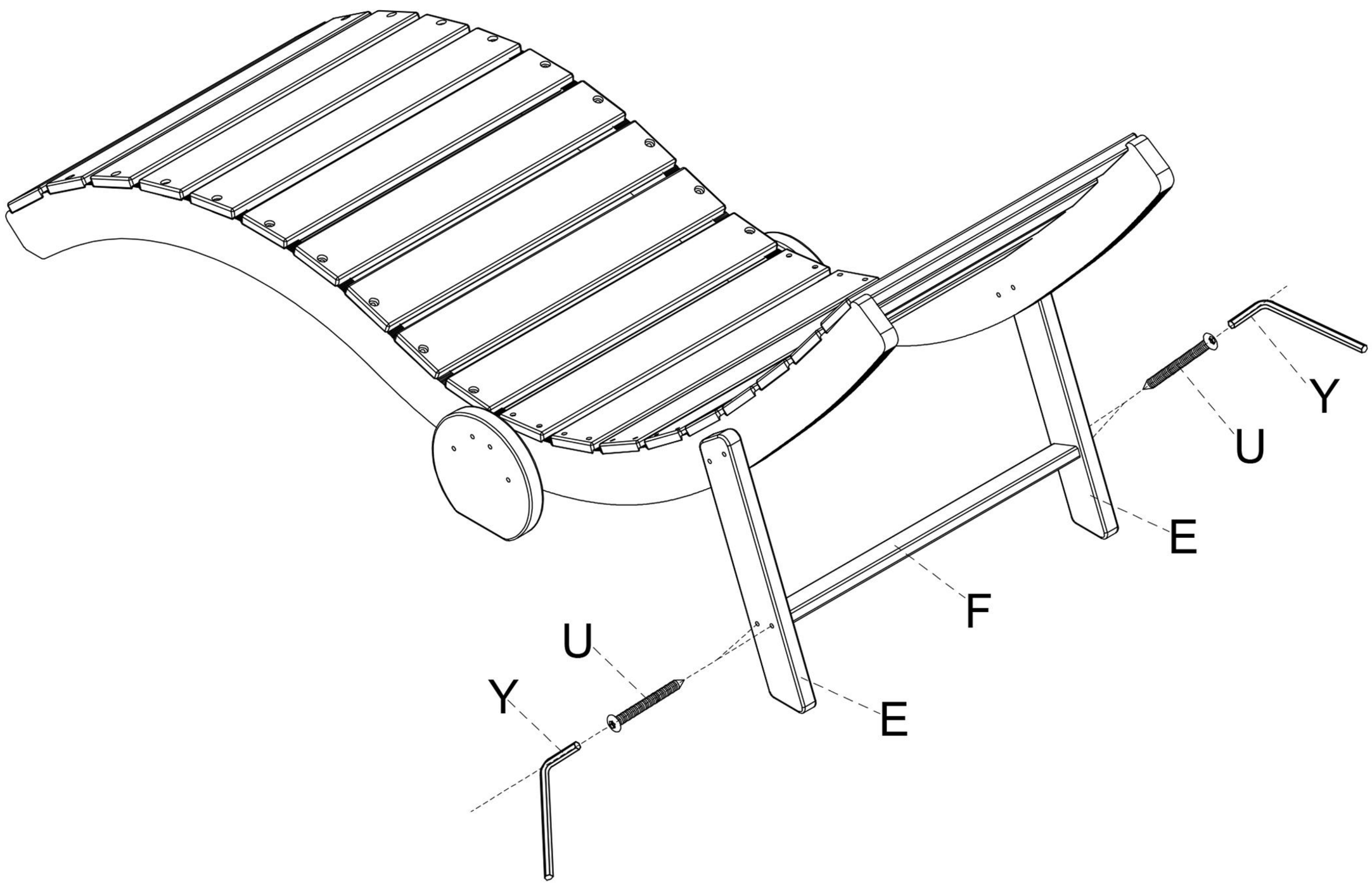

Step 7

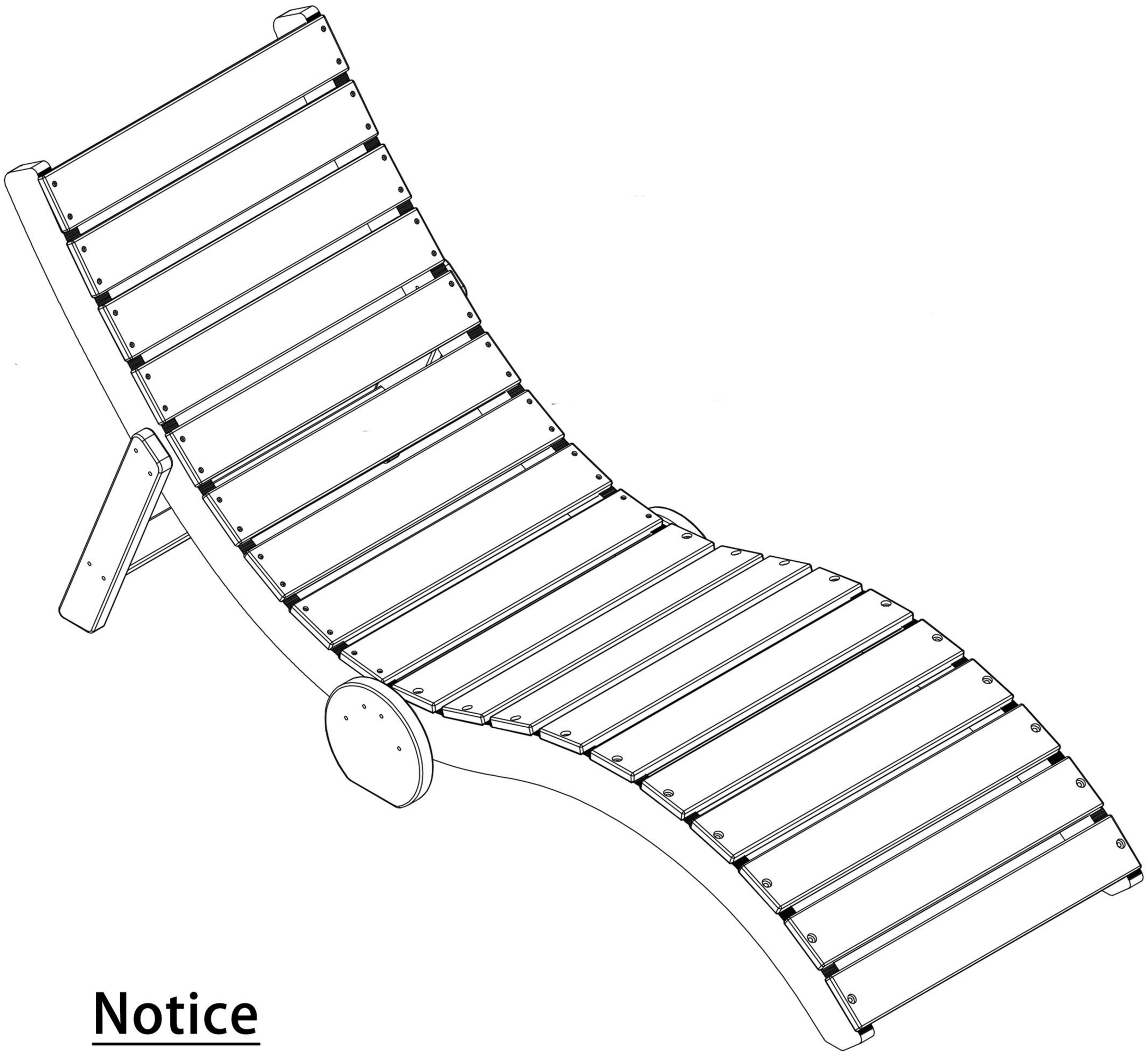

Notice

Tighten all screws after installation