THREE — TIER

Rotating Tempered Glass Display Cabinet

WINE CABINET / DISPLAY CABINET

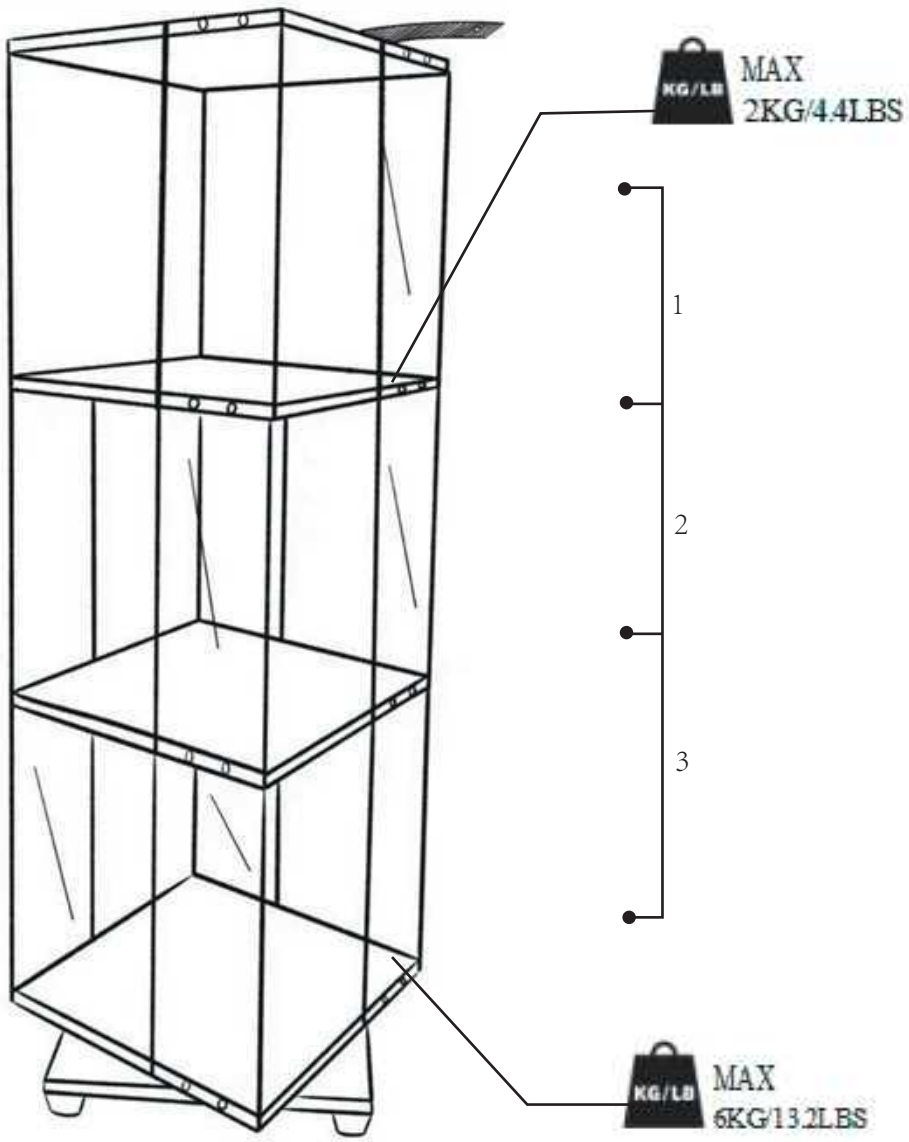

PACKING

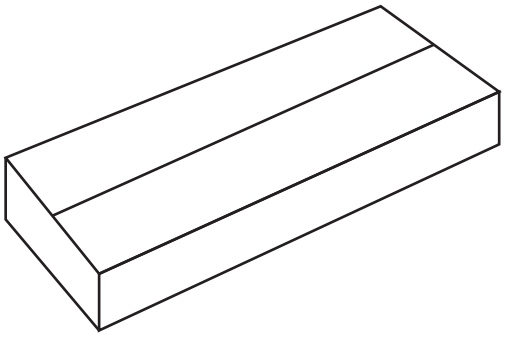

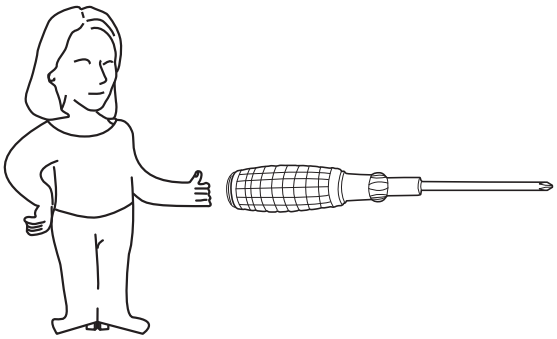

SCALE AND PERSPECTIVE

The installation graphics in this installation manual are only for illustration purposes and are not drawn at a 1:1 equal scale. The perspective angle is a multi-angle perspective, and some graphics are drawn using the principle of scatter perspective in order to highlight the key points !

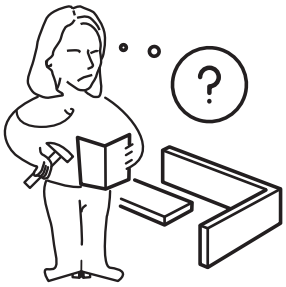

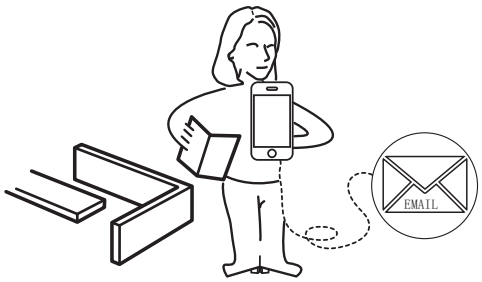

IF YOU ENCOUNTER ANY QUESTIONS DURING INSTALLATION, PLEASE SEND AN EMAIL FOR CONSULTATION.

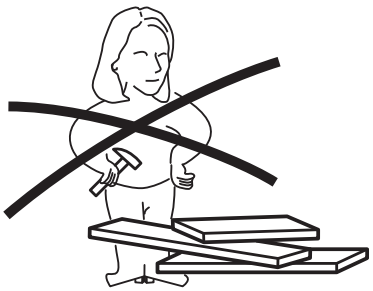

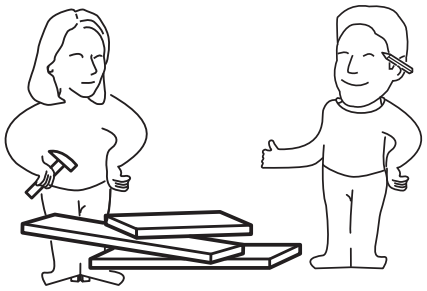

CANNOT BE INSTALLED BY ONLY ONE PERSON!

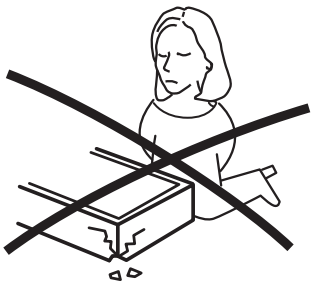

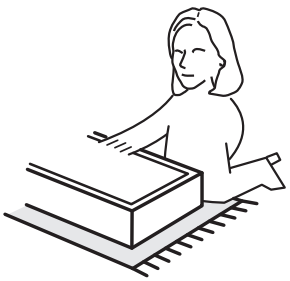

NOT TO BE INSTALLED ON HARD GROUND!PLEASE USE CARDBOARD OR CARPET AS A BUFFER LAYER DURING THE INSTALLATION!

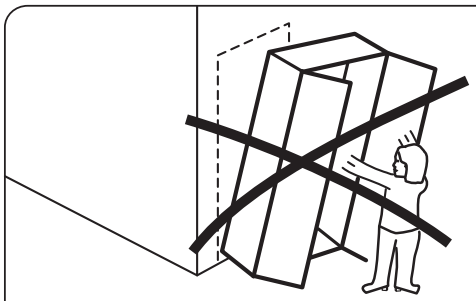

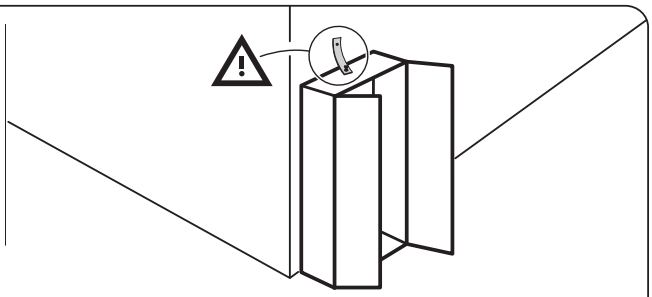

TO PREVENT TIPPING HAZARDS AND LOSSES, PLEASE BE SURE TO INSTALL ANTI-TIPPING DEVICES!

- ALWAYS secure it with an anchor device.
- NEVER allow children to stand, climb, or hang on doors and shelves.
- Place heavy items down low.

Please be sure to install a fall protection devic

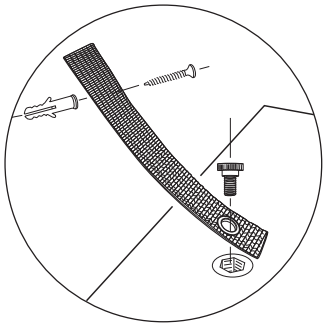

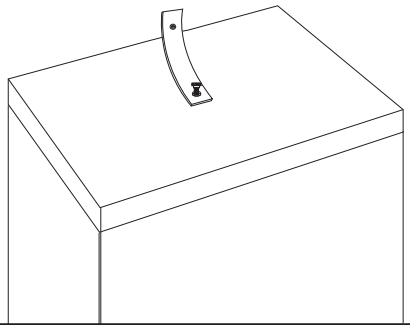

Manual preservation/maintenance

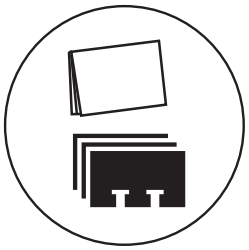

Please keep the installation manual properly and do not discard it;

Please do not use acidic or alkaline detergents to clean tempered glass or cover plates. Do not use a damp cloth to wipe tempered glass. Use a slightly damp cloth containing water to wipe tempered glass; Please use a dry cloth to wipe the cover plate!

Cabinet movement instructions

Before moving the cabinet, please ensure that no objects are placed on the shelf; Remove the tempered glass shelf and put it in a safe location; Check the door lock to ensure that the tempered glass door is closed; Items inside the cabinet are prohibited. Please use two people when moving, it is limited to short distance indoor movement and the movement distance should not exceed 3 meters(<3m/118in); Please completely unpack and protect the glass when moving or moving over long distances!

Please use gloves during installation

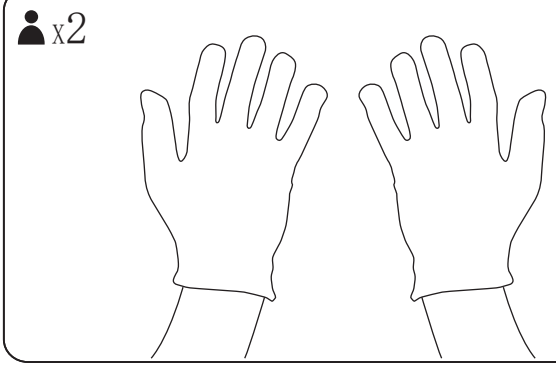

ENGLISH

GOOD TO KNOW ABOUT TEMPERED GLASS

IMPORTANT :

HANDLE WITH CARE! A DAMAGED EDGE OR SCRATCHED SURFACE CAN IN EXCEPTIONAL CASES CAUSE THE GLASS TO CRACK SUDDENLY. HOWEVER, NEVER INTO SHARP FRAGMENTS, ONLY INTO SMALL PIECES. AVOID COLLISIONS FROM THE SIDE - THIS IS THE MOST FRAGILE PART OF THE GLASS.

WARNING

FURNITURE TIPPING-OVER COULD RESULT IN INJURY OR DEATH TO THE INSTALLER.

ALWAYS SECURE THIS PRODUCT PERMANENTLY TO THE WALL.

The only wall mount included in the package is suitable for wooden walls or other solid walls.

For wooden walls, please only use the screws, the included plastic screw accessory is only an option. For hard walls, please drill holes with a hammer and then insert the screws and plastic accessories. The included wall mount is not suitable for walls with weak holding force, such as plasterboard. To attach this product to the plasterboard, please make sure the screws are securely fastened to the keel. Please choose the proper safety devices according to the type of wall in your house.

01 Tempered glass has a 0.3% risk of self-explosion. In case of such an accident, please contact us and we will replace the damaged glass. During installation, please wear gloves, long-sleeved shirts, pants and socks to avoid possible injury ;

02 To avoid possible accidents, please keep children away during installation. Please make sure that the installation is done by two adults ;

03 During installation, use cardboard or carpet as a buffer layer to prevent the glass corner from colliding with hard objects such as the floor. Especially when installing tempered glass, make sure the corners do not hit the floor to prevent the tempered glass from exploding due to force changes ;

04 When installing a display case, install the anti-tilt device first to avoid possible serious or fatal injury. To prevent possible tipping over, the display case must be permanently attached to the wall. Wall mounting is not limited to the fixtures we offer. You are free to install similar fixtures to avoid possible hazards ;

05 DO NOT operate the cabinet door frequently, and DO NOT shake the cabinet to avoid the risk of colliding with the cabinet door or dropping objects. Again, install an anti-tipping device and keep children away (at least 2 meters/6.6 feet away)from this display case. Please also install a door lock to avoid possible injury from accidental operation by children ;

06 The top/bottom panel of this cabinet is made of MFC/PVC-covered particle board, which is not fireproof ;

07 For disposal, please contact the relevant local authorities or qualified companies ;

08 The product is a partially transparent tempered glass display case, it is not fully transparent. After installation, the distance may be different due to the different fixing forces ;

09 No part of this product can be swallowed, played with, or used for other purposes ;

10 Please adjust the footrest on the product after installation. The maximum load of the glass plate is 6.00 kg13.2 lbs. Note that the load capacity is for stored items only ;

11 Product dimensions may have a tolerance of 10 mm/0.4 inch due to different measuring tools or methods ;

12 After installing the cabinet, check and tighten all screws to avoid potential safety hazards, such as shelves falling and cabinet structures becoming loose due to loose screws ;

PRODUCT COMPONENT LIST

NO	ASSEMBLY	SIZE	NUMBER	TEXTURE OFMATERIAL
1	Side glass	1190*150mm	4	Tempered glass
2	Swivel base plate	380*380mm	1	MFC/PVC edge banding
3	Top plate	380*380mm	1	
4	Prtition board	380*380mm	2	
5	Accessory Package	Various specifications		Various materials

! Product dimensions may have an error with 10mm due to the usage of different measuring tools or methods;

If you find that the number of parts in the kit is not consistent with the manual, the excess number can be used as a backup.

1

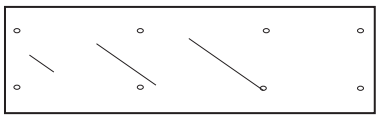

1190*150mm

Side glass / x4

2

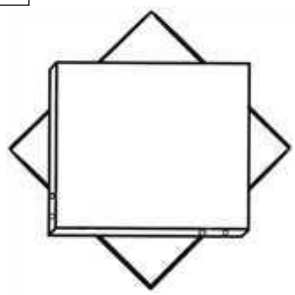

380*380mm

Swivel base plate / x1

3

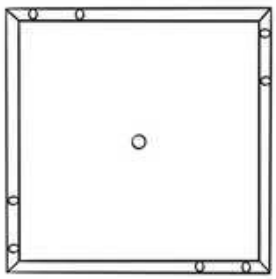

380*380mm

Top plate/ x1

4

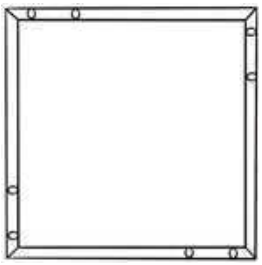

380*380mm

Partition board / x2

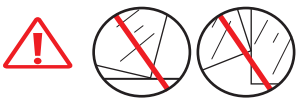

INSTRUCTIONS FOR USING TEMPERED GLASS

HANDLE WITH CARE! EDGE DAMAGE OR SURFACE SCRATCHES CAN CAUSE SUDDEN GLASS BREAKAGE IN EXCEPTIONAL CASES. HOWEVER, IT WILL NEVER BECOME SHARP SHARDS, ONLY BREAKING INTO SMALL PIECES. PLEASE AVOID SIDE IMPACTS - THIS IS THE WEAK POINT OF THE GLASS.

TIPS:

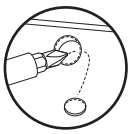

IF SOME OF THE GLASS HOLES ARE NOT OPEN, YOU CAN USE A SCREWDRIVER TO POKE THEM OPEN.

ASSEMBLY PARTS LIST

A 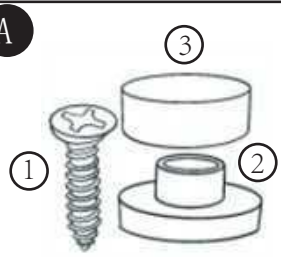	B 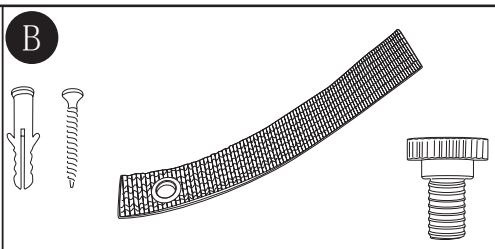	C 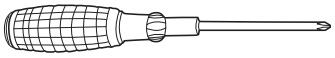
Screw istallation kit/x32	Anti-tipping device / x1	Screwdriver / x1
D	E 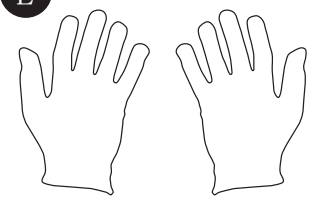	
Anchor mounting kit/x4	Glove / x2	

1

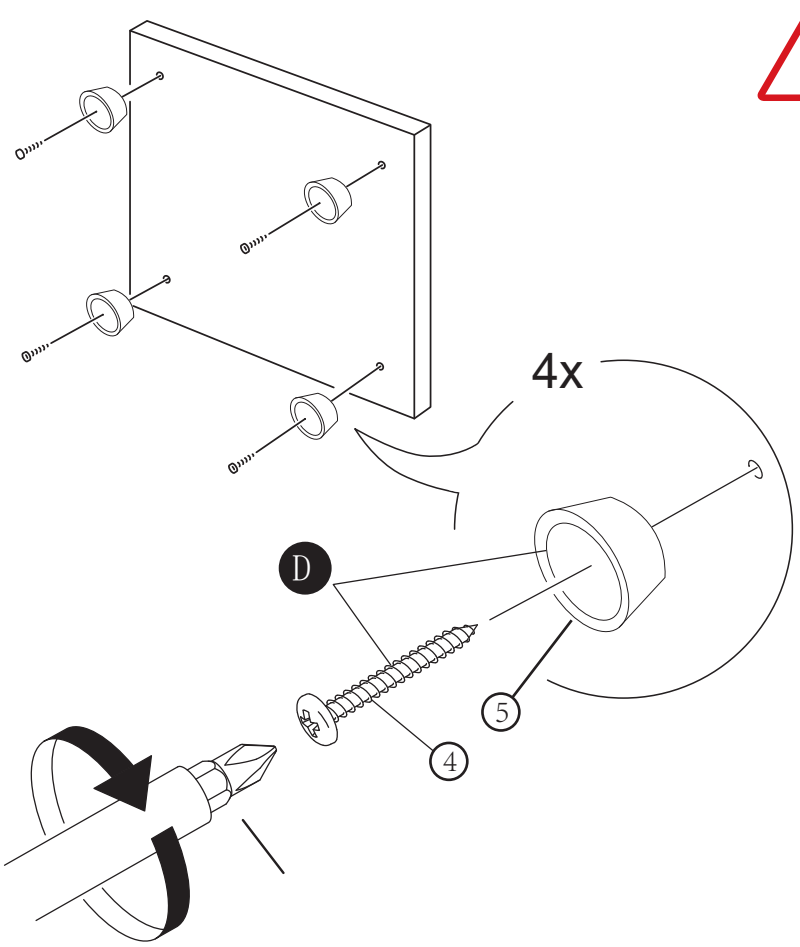
4x
D
5
4

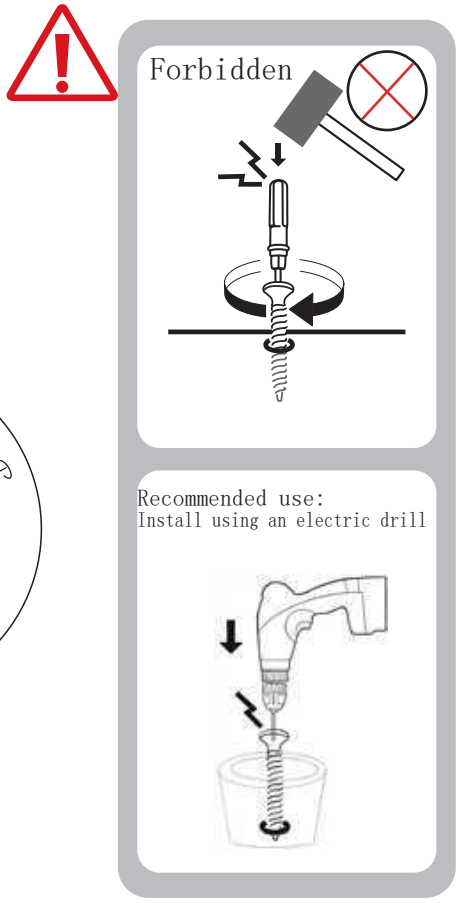
Forbidden
Recommended use:
Install using an electric drill

2

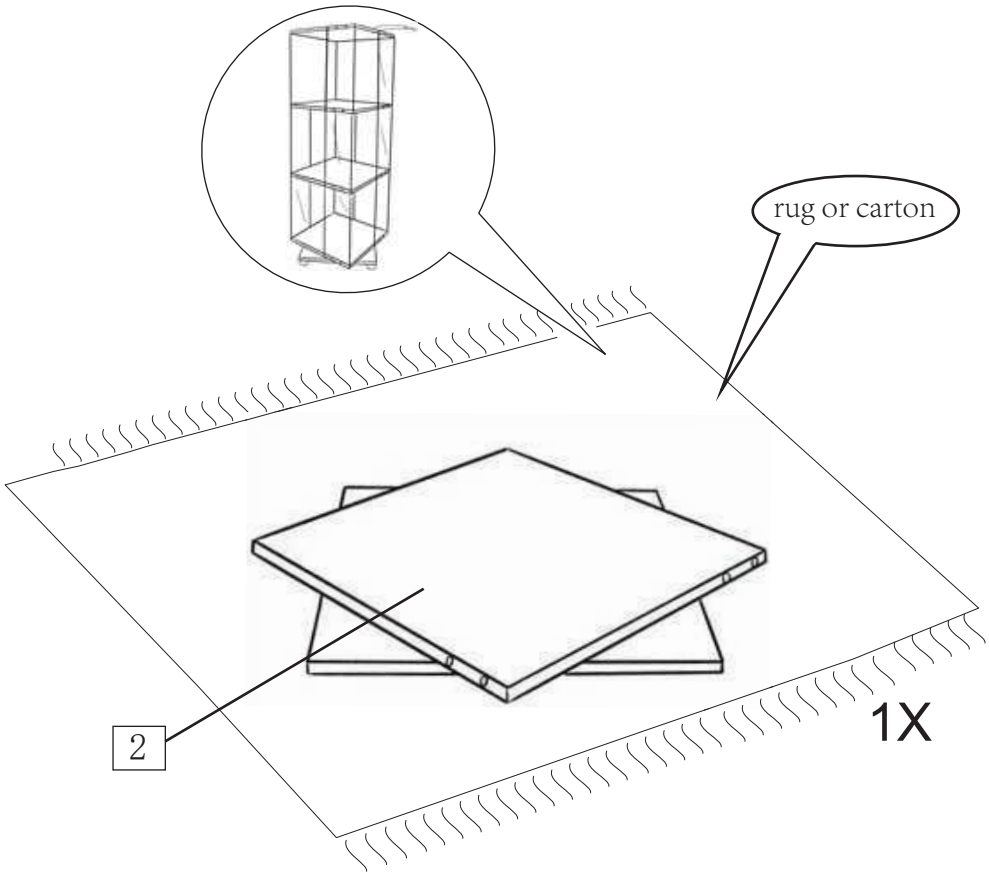
rug or carton
2
1X

3 ONE PERSON HOLDS THE GLASS IN PLACE WHILE THE OTHER INSTALLS IT.

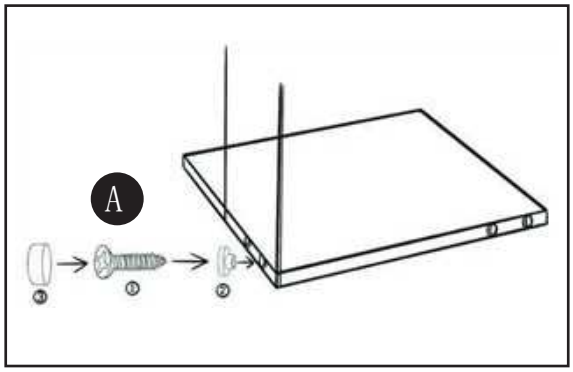

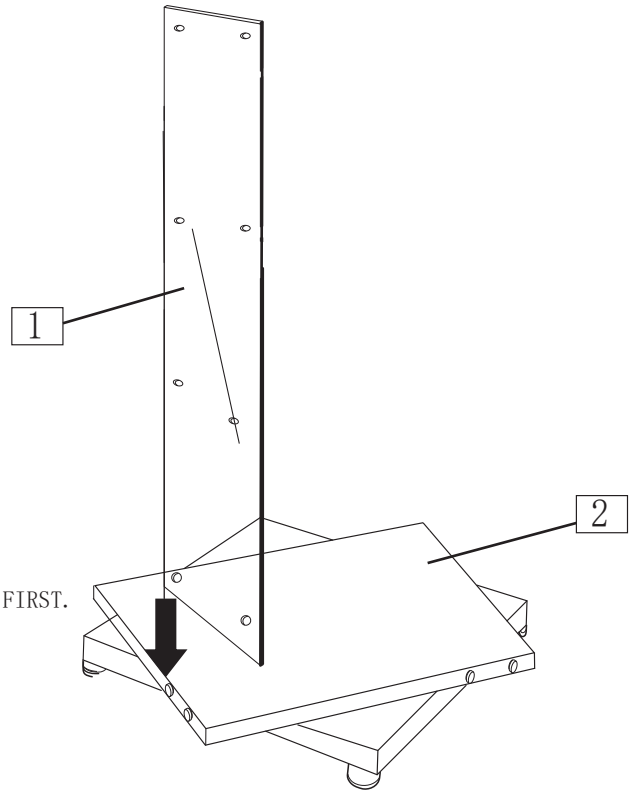

INSERT NO. ② CONNECTOR INTO THE GLASS PANEL HOLE FIRST.
SECURE NO. ① CONNECTOR WITH A SCREWDRIVER,
THEN SNAP NO. ③ CONNECTOR INTO PLACE.

4 AFTER ROTATING THE GLASS PANEL, ONE PERSON HOLDS IT STEADY WHILE THE OTHER INSTALLS IT!

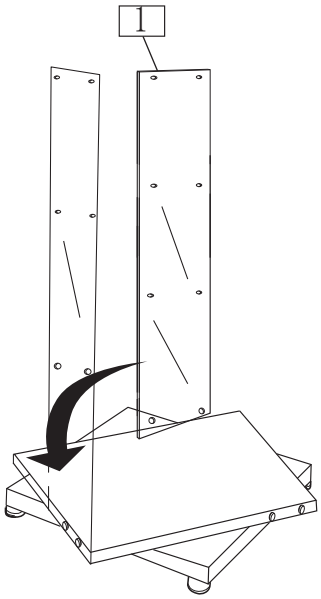

5 INSTALL THE REMAINING GLASS PANELS IN THE SAME WAY.

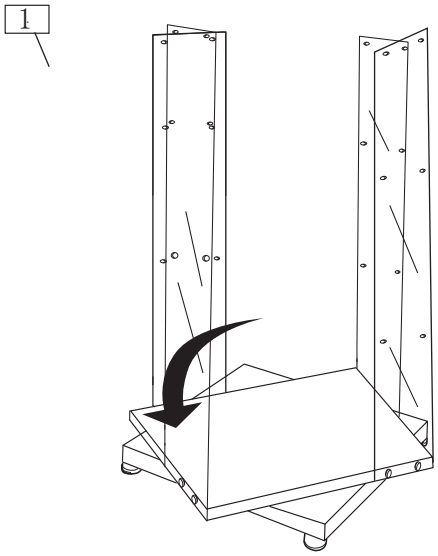

6 Align the partition board with the holes on the glass panel.
One person holds the partition board in place while the other installs the screws.
Install screws on all four sides.

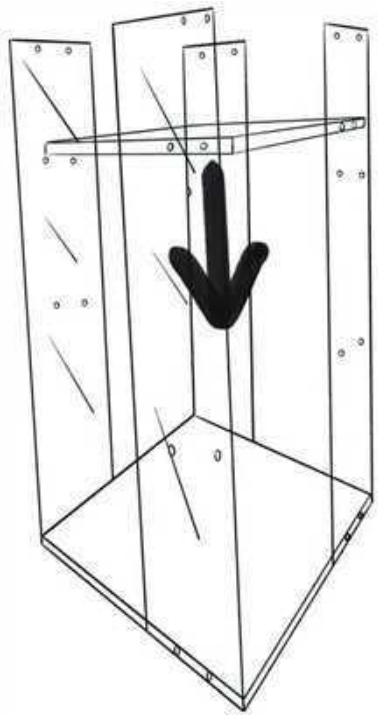

4

INSERT NO. ② CONNECTOR INTO THE GLASS PANEL HOLE FIRST.
SECURE NO. ① CONNECTOR WITH A SCREWDRIVER,
THEN SNAP NO. ③ CONNECTOR INTO PLACE.

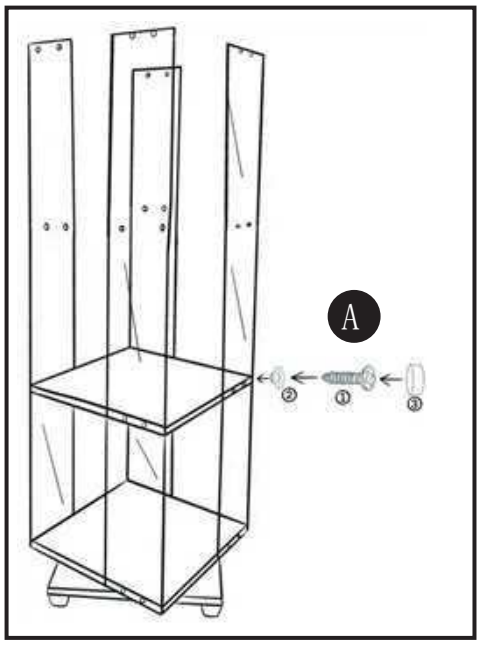

7 Place the No. 4 partition board
one person holds the partition board steady while the other installs the screws.

INSERT NO. ② CONNECTOR INTO THE GLASS PANEL HOLE FIRST.
SECURE NO. ① CONNECTOR WITH A SCREWDRIVER,
THEN SNAP NO. ③ CONNECTOR INTO PLACE.

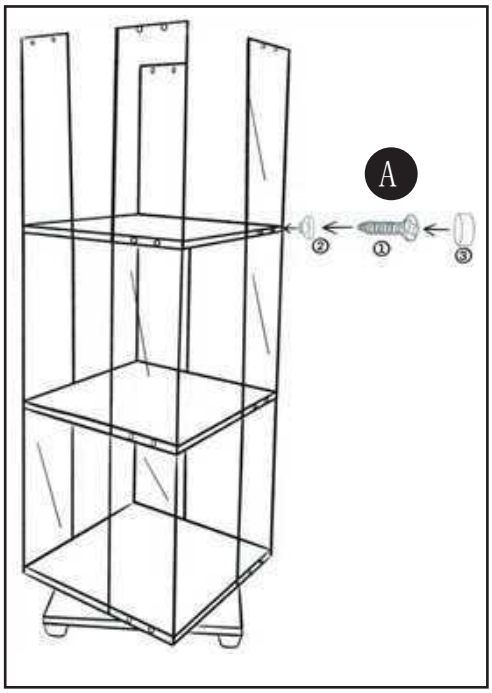

4

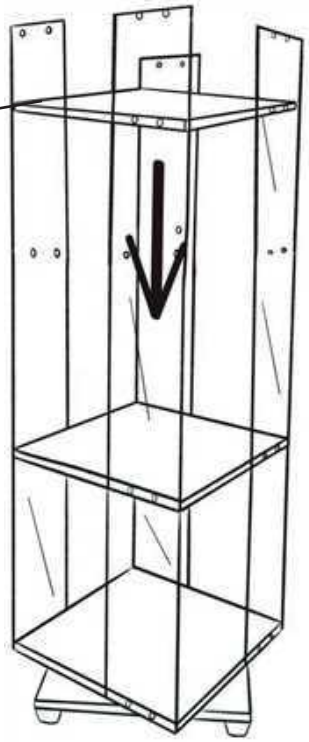

8

Place the No. 3 top plate
one person holds the partition board steady while the other installs the screws.

INSERT NO. ② CONNECTOR INTO THE GLASS PANEL HOLE FIRST.
SECURE NO. ① CONNECTOR WITH A SCREWDRIVER,
THEN SNAP NO. ③ CONNECTOR INTO PLACE.

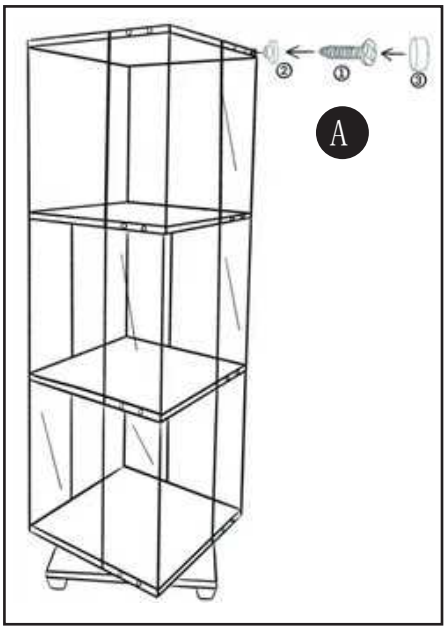

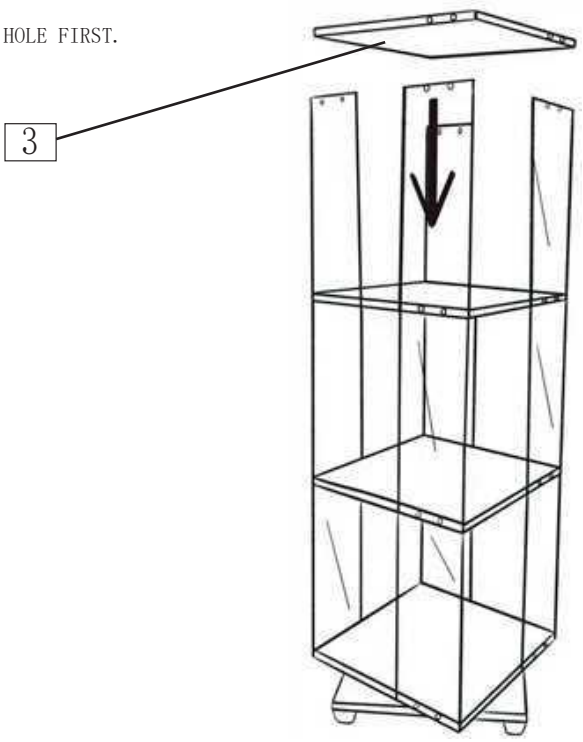

9

ANTI-TIPPING DEVICE

WARNING
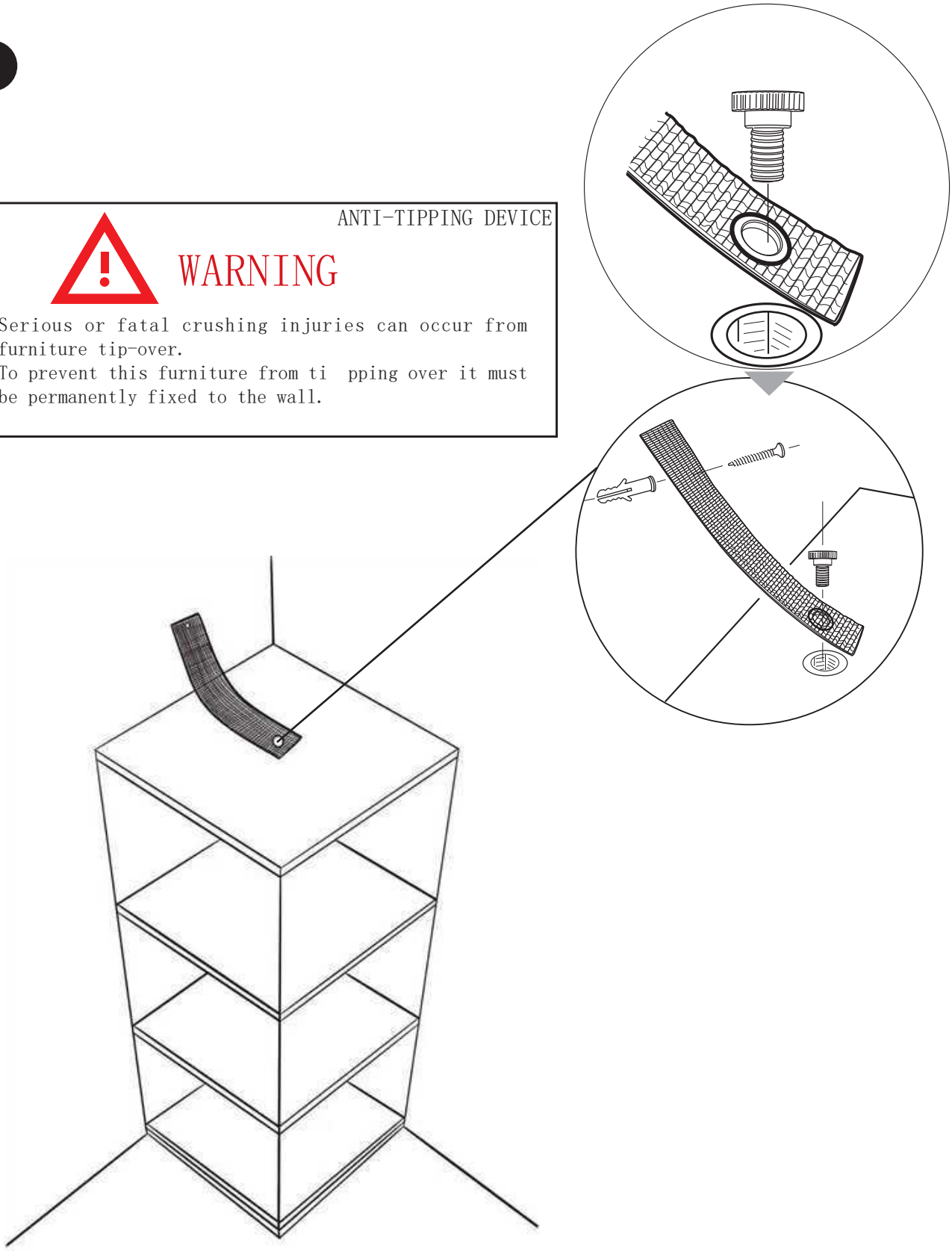
Serious or fatal crushing injuries can occur from furniture tip-over.
To prevent this furniture from ti pping over it must be permanently fixed to the wall.