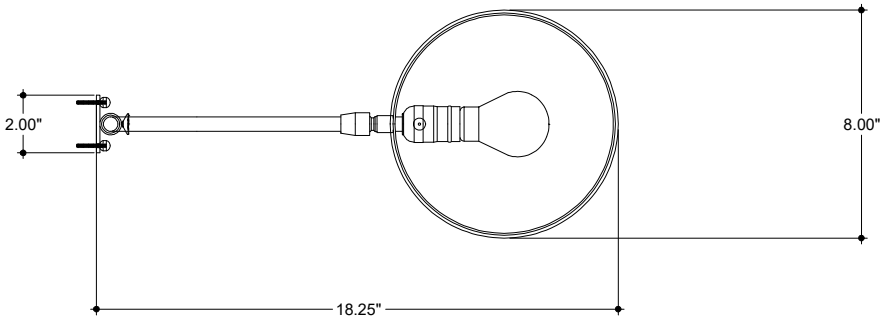

TOP VIEW

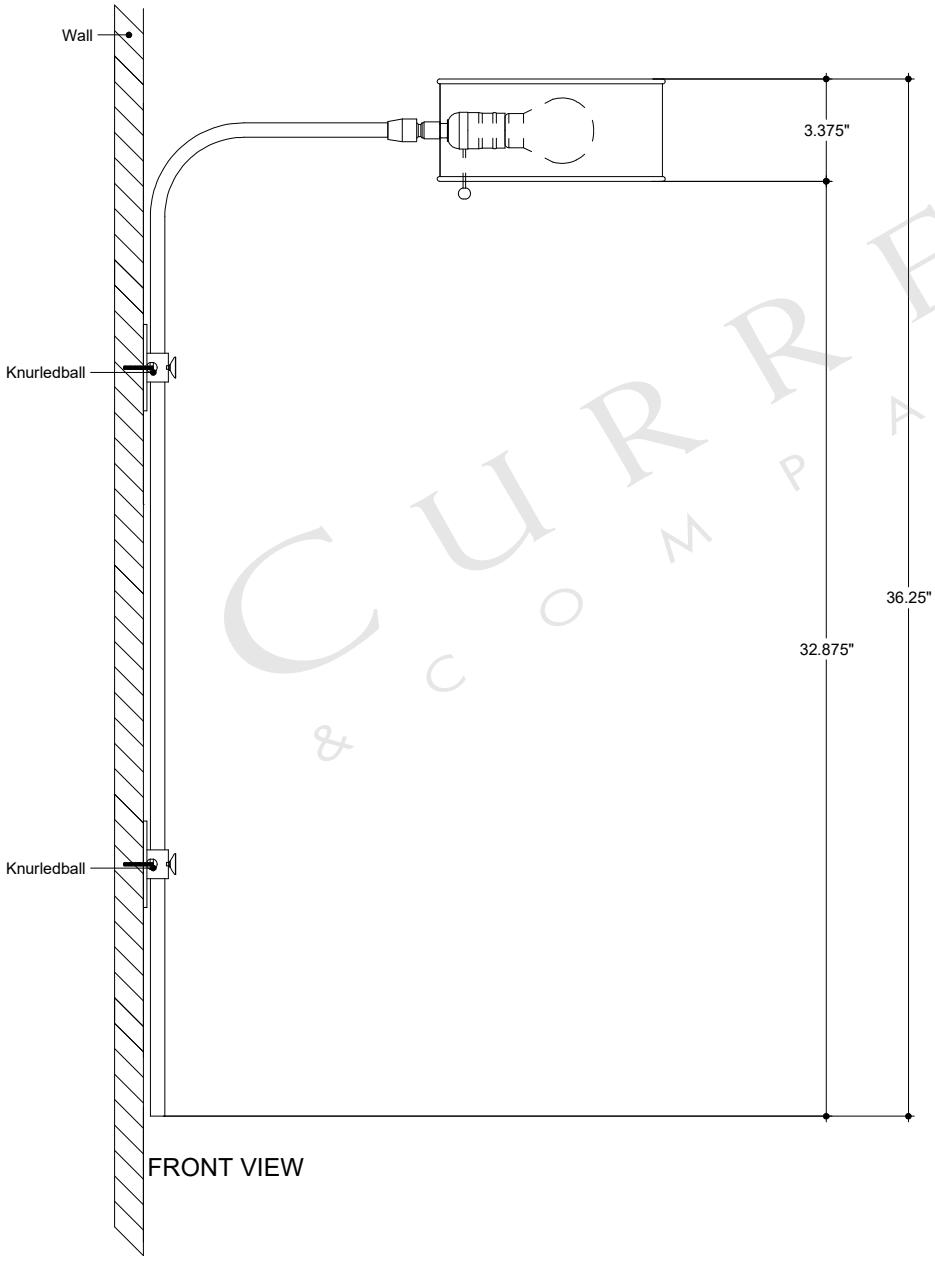

FRONT VIEW

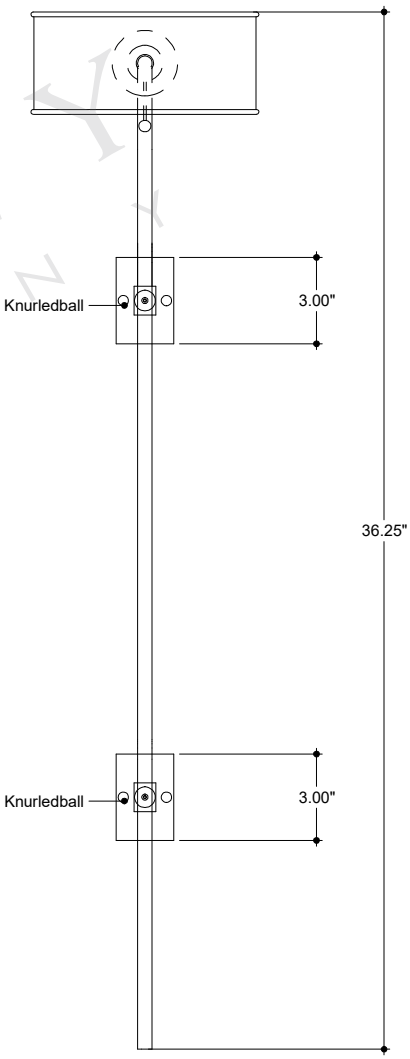

SIDE VIEW

5000-0060

ALL WORK © 2017 CURREY & COMPANY