USER GUIDE



BATHROOM LED MIRROR CABINE

INSTALLATION MANUAL

- This product can be installed in bathroom zone 2 (as defined by IEE Wiring Regulations) and beyond. See bathroom diagram below:

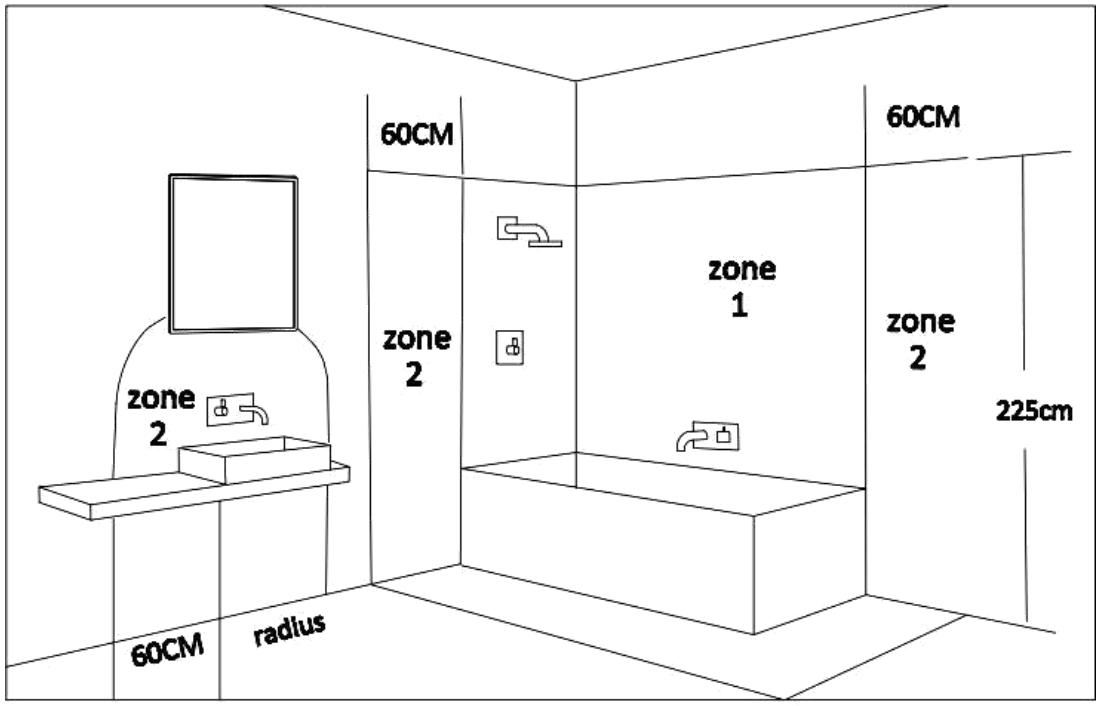

OUTSIDE ZONES

- This product is for indoor use only.
- This product requires an earth connection.
- This product is wall mounted and must be fixed on a solid wall, composite panel or timber frame.
- Ensure connection are turned off at the consumer unit or fuse board before installing or carrying out any maintenance.
- Please reserve minimum distance of 150 mm between the infrared sensor and an adjacent countertop or obstruction or any other barrier to ensure correct function of the sensor switch. (For models with sensor switches, please refer to 1.4).
- When working at height, please use a suitable platform to work from.
- Ensure that the fixing location is able to take the weight of the complete fitting.
- Wear suitable eye production when drilling. Be careful when using power tools near water.
- For new installations, check for any electrical cables or pipe work (gas/water) in the vicinity of the intended mounting point before proceeding with the installation.
- For ease of installation, the assistance of one or two additional persons is recommended.
- Irregularities in wall surface may cause distortion of product body when mounted. Place shims between product body and wall if necessary.

IMPORTANT FOR MIRROR:

- DO NOT strike the mirror glass with hard or pointed items.
- It is recommended that the product is cleaned with a soft, dry, not abrasive cloth.
- DO NOT use cleaning agents or abrasive materials on any type of finished surface or exposed edges of the mirror.
- DO NOT use cleaners that contain solutions of ammonia, vinegar, or chlorine.
- DO NOT allow moisture to come into contact with the electrical components.
- DO NOT use powdered cleansers or steel wool.
- Apply cleaner to soft cloth and wipe mirror. Dry mirror thoroughly.
- Keep mirror and the chassis or cabinet dry and clean.
- A well ventilated bathroom is important.

This Bathroom Mirror Cabinet is not available in the following situations:

- Incorrect use.
- Incorrect installation.
- Tampering.
- Incorrect maintenance or lack of maintenance.
- Use of unsuitable cleaning products or use of cleaning products in the wrong way.
- For chemical, electrical or electrochemical damage.
- Incorrect power connection or using wrong voltage.
- Damage by hard or pointed objects.

To prevent possible harm to the environment or human health from uncontrolled waste disposal, please separate any such product from other waste types and recycle it responsibly at your local facilities. Please check with your local authority, recycling center or retailer for recycling advice. Thank you.

INSTALLATION

- Carefully remove your product from the shipping materials- do no use sharp objects that could scratch the glass.
- Discard shipping materials. Make sure the plastic bag is out of the reach of children.
- Safely set the cabinet assembly aside while you prepare the mounting/installing area.

1. Positioning

1.1 Please check the wall to ensure that the wall to be installed is a load-bearing wall, which can bear the weight of the cabinet, and ensure that the location of the drilling holes avoids the wiring inside the wall to prevent wire damaging during installation.

1.2 Please measure the height and position of the cabinet on the wall. Ensure the mounting plate in level using a spirit-level, then mark the position of the holes with a pencil.

1.3 Before drilling any holes on the wall, please make sure measure the X and Y distance between the midpoints of the brackets on the bracket back, and mark the position on the wall. Distance may vary depending on model and sizes. This is very important to measure the bracket positions before drilling on the wall.

DOUBLE DOOR CABINET

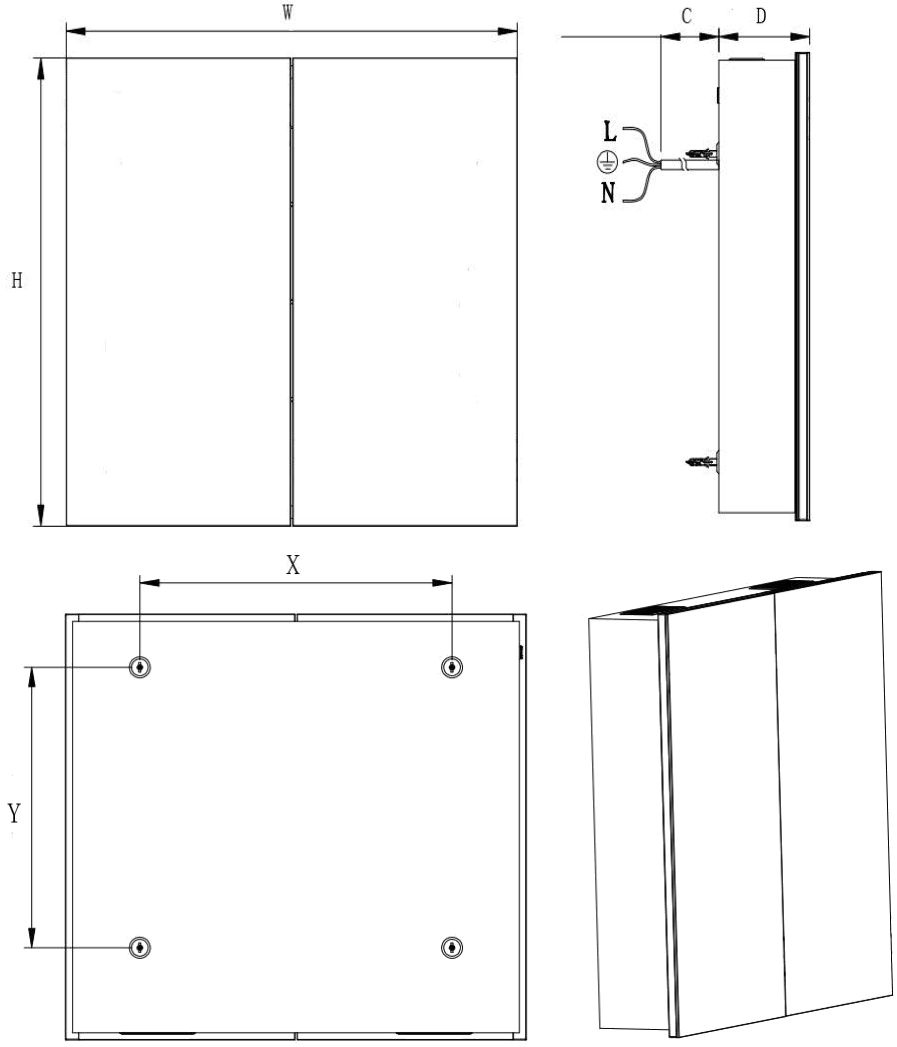

1.4. For the models with sensor switch (at the bottom of right side of cabinet),

please reserve at least 150 mm distance from the wall at the side of the sensor switch! (More space may need to reserved for different wall surfaces, depending on the on-site condition.) It is recommended to do some trail testing on the reacting distance of the sensor switch before cabinet positioning and drilling holes on walls.

2. Fixing on wall

After marking the positions on the wall, follow the picture instruction as below.

2.1 Drill four holes on the wall in position.

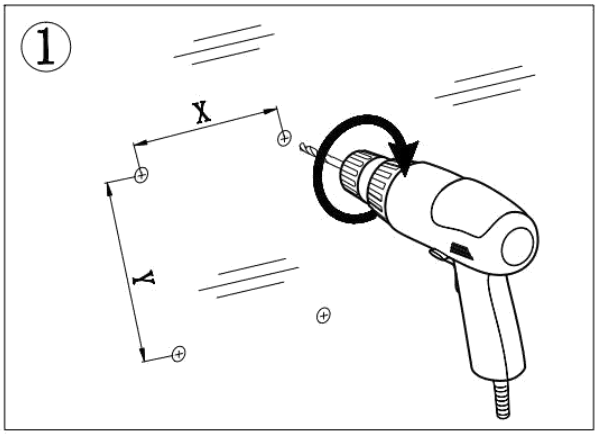

2.2 Insert the expansion plugs into the wall.

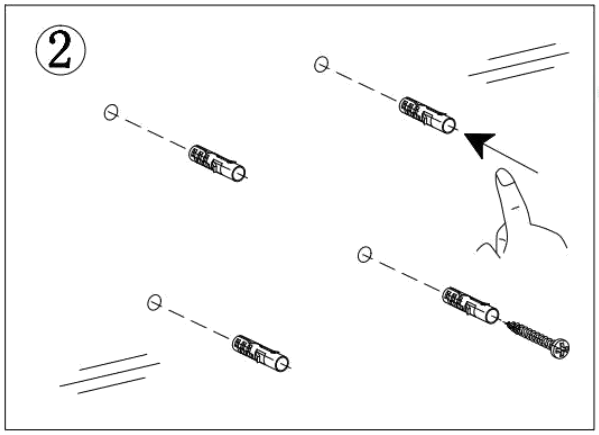

2.2 Connect the wires from the wall.

DOUBLE DOOR CABINET

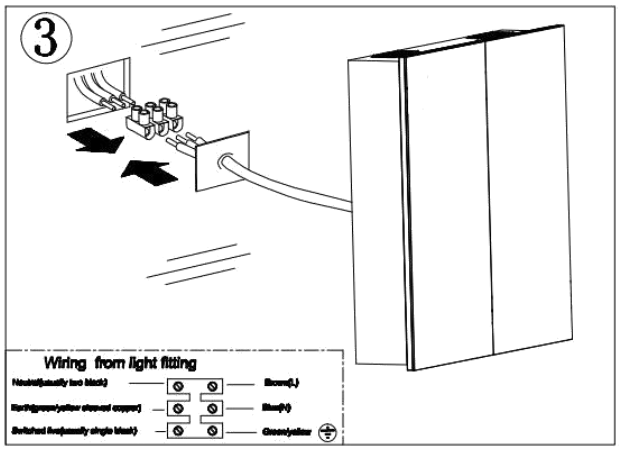

<u>*Please refer to 3.1 content for electricity connecting details.</u>

2.3 Place the cabinet to the positions and install the screws into the wall to fix the cabinet. Make sure the screws are tight and in right position and the cabinet is fixed stably.

DOUBLE DOOR CABINET

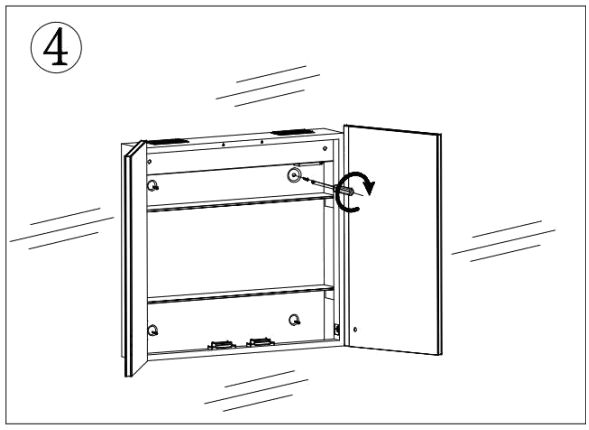

2.4 Other remarks:

2.4.1 The cabinet door and body is assembled with hinges (vary per different design). After long transportation, it might be a slight displacement between mirror door and cabinet body.
Please adjust the soft hinges with tools and adjust the door to be right position.

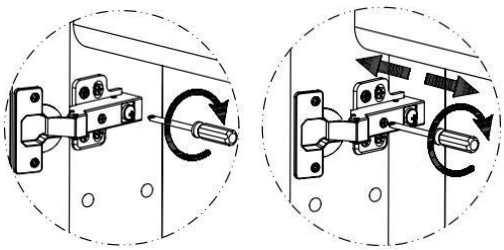

2.4.2 And specially for double door cabinet with piano hinge (shown as below), there might a slight gap between two doors after transportation.

2.4.2.1 Take the cabinet down and place it on the clean and smooth surface.



2.4.2.2 Adjust the doors as per the positions and direction shown below by hands. Please carefully press and adjust the door corners with appropriate efforts until they are in right position again.

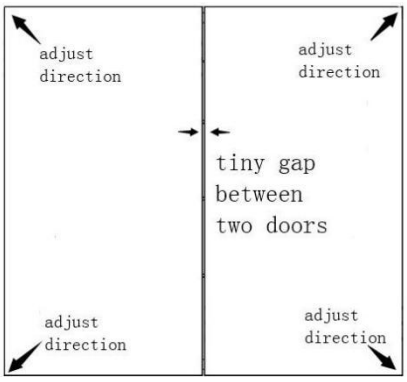

2.4.2.3 And if the gap is still not good after adjustment, then please hang the cabinet on the wall and do the adjustment as 2.4.2.2 again.

3. Wiring from light fitting

3.1 Connect the wiring from the back of the cabinet in right way.

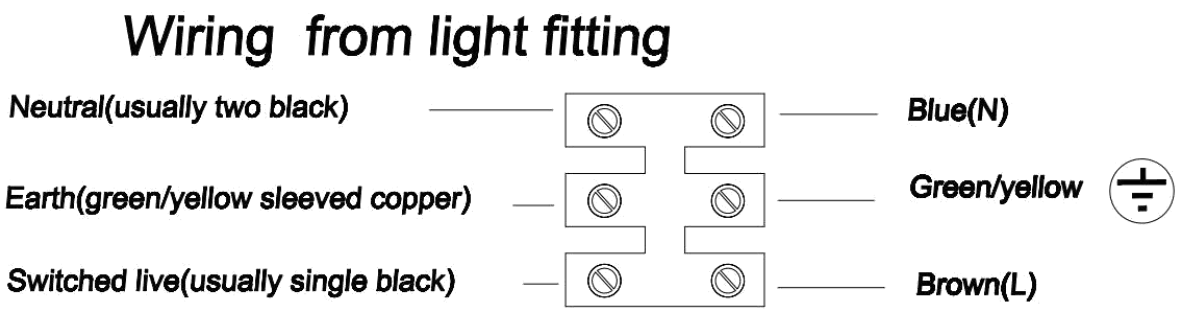

4. Switch of LED Lighting

Cabinets will have different switches per different model design.

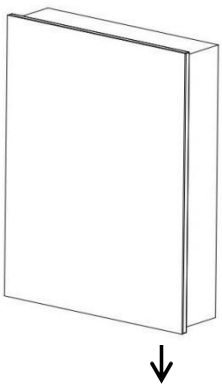

4.1 Sensor Switch - for models with sensor switch

4.1.1 Sensor switch is normally at the bottom of right side of cabinet or on the right under the bottom side of cabinet (depending on different models). Please refer to 1.4 for the installation guidelines of sensor switch.

4. 1 . 2

The LED light switch of the cabinet is controlled by the hand movement over the switch in the effective working range to turn on and off.
The sensitivity of the switch may be affected
by the actual working environment and personal habits.
Please try some more times to master
the appropriate speed of hand movement over the switch.

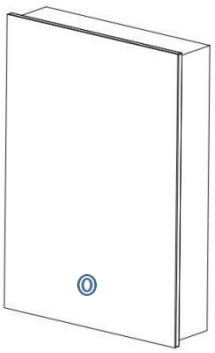

5. Anti-fog Function - for models with anti-fog function

5.1 The demister pad is in the middle of a single mirror and covers around 60-70% area of the mirror on the door. It is heated to remove the fog on mirror when the mirror light is ON.

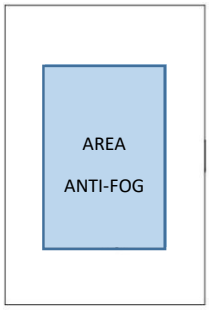

5.2 By turning on and off the cabinet, the LED lighting and theanti-fog function will be on/off accordingly.
The demister pad takes at least 5-10 minutes to remove the fog after the LED light is on.
Please turn the LED on at least 5 minutes in advance before using the anti-fog function or as per your needs.

6. Storage Function

This mirror cabinet comes with adjustable layered storage space to store your toiletries and keep your bathroom tidy.

7. Shaver Socket (230V, 0.1A, Max 20W) - for models with shaver socket



7.1 The Shaver Socket is in the cabinet body. When the cabinet is energized, insert your shaver into the shaver socket. Pay attention to electrical safety when using shaver socket. After using socket, please remove shaver accordingly and keep the socket dry and clean.

7.2 Please make sure your shaver is function workable before connecting with the cabinet. Due to compatibility problem among different shavers, some shavers may not be suitable for use, which can not be predicted and avoided. Please try with other shaver.

WARNINIG: DANGEROUS! DO NOT USE any > 20W equipment with this shaver socket, Such as hair drier, which will possibly cause burn off for appliances in the cabinet.

8. Bluetooth Speaker - for models with bluetooth speaker

8.1 By controlling of the sensor switch of the LED LIGHTING, the bluetooth function will be on/off according. When the LED light is on, the Bluetooth function startsworking.
---- And for the touching control version, the bluetooth will be controlled by the touching button on the mirror of the cabinet door.

8.2 Bluetooth device pairing connection: Turn on the Bluetooth function of your Bluetooth device (mobile phone), scan and match the device of ROYOHO M8003. There is a sound prompt when the device is paired successfully. After successful connection, music play is controlled by your device (mobile phone). Also the audio volume is adjusted by the volume button of your your device (mobile phone).

8.3 The theoretical working area of Bluetooth signal ≤7 Meters of area . The working effect of Bluetooth signal will be affected by uncertain factors such as indoor wall obstacle, signal condition and connection equipment compatibility in installation environment, and the actual working distance should be based on the actual scene.

8.4. If your bluetooth device is out of the bluetooth working area for more than 5-10 minutes, it might be disconnected with the cabinet bluetooth. Restart the Bluetooth on your device and match the ROYOHO M8003 device again. Or turn off and turn on the LED lighting to restart the Bluetooth of the cabinet and match your device again if necessary. If the connection is unsuccessful, please try again.

8.5 The effect of Bluetooth connections may vary between different devices. Please make sure your device is function workable before matching up with the cabinet. Due to compatibility problem among different devices, some devices may be connected abnormally or insensitive, which can not be predicted and avoided. Please try connecting with other devices.

CIRCUIT DIAGRAM

CDC1: Models with anti-fog/sensor switch

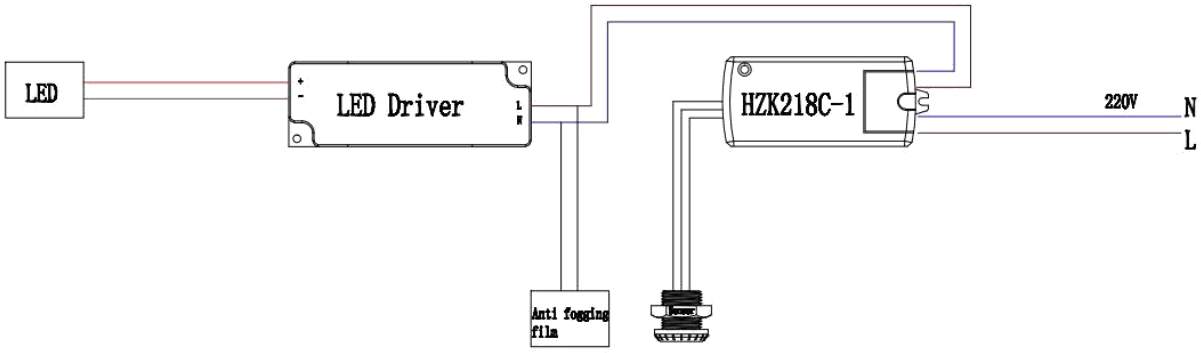

CDC2: Models with anti-fog/ touch switch/ shaver socket

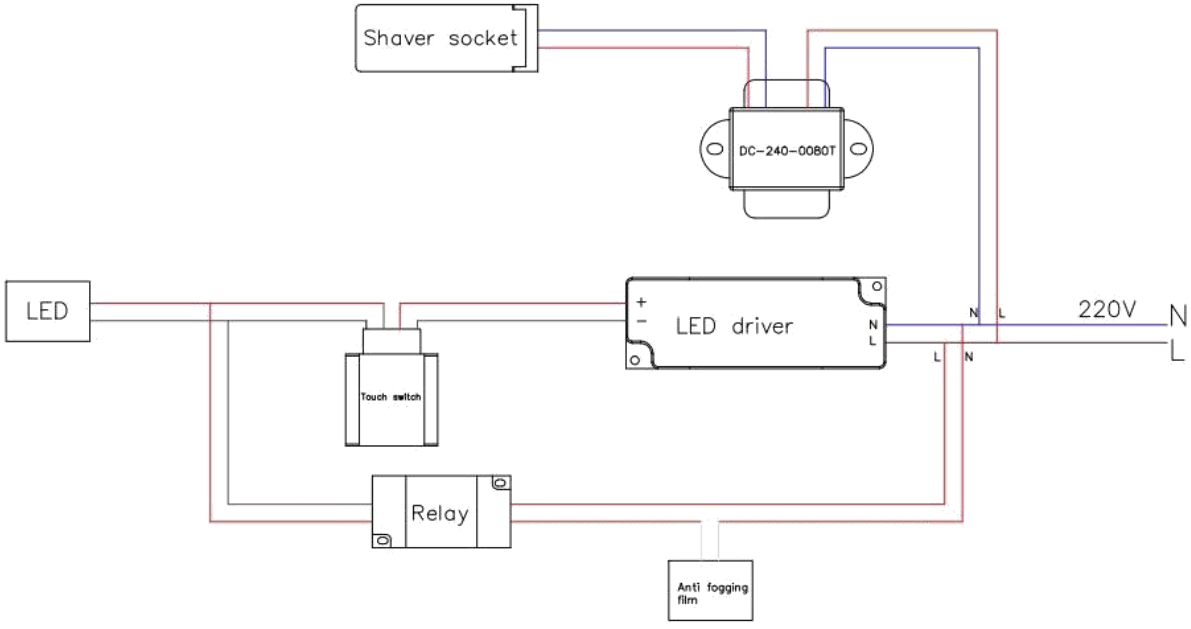

CDC3: Models with anti-fog/ sensor switch/ shaver socket/digital clock

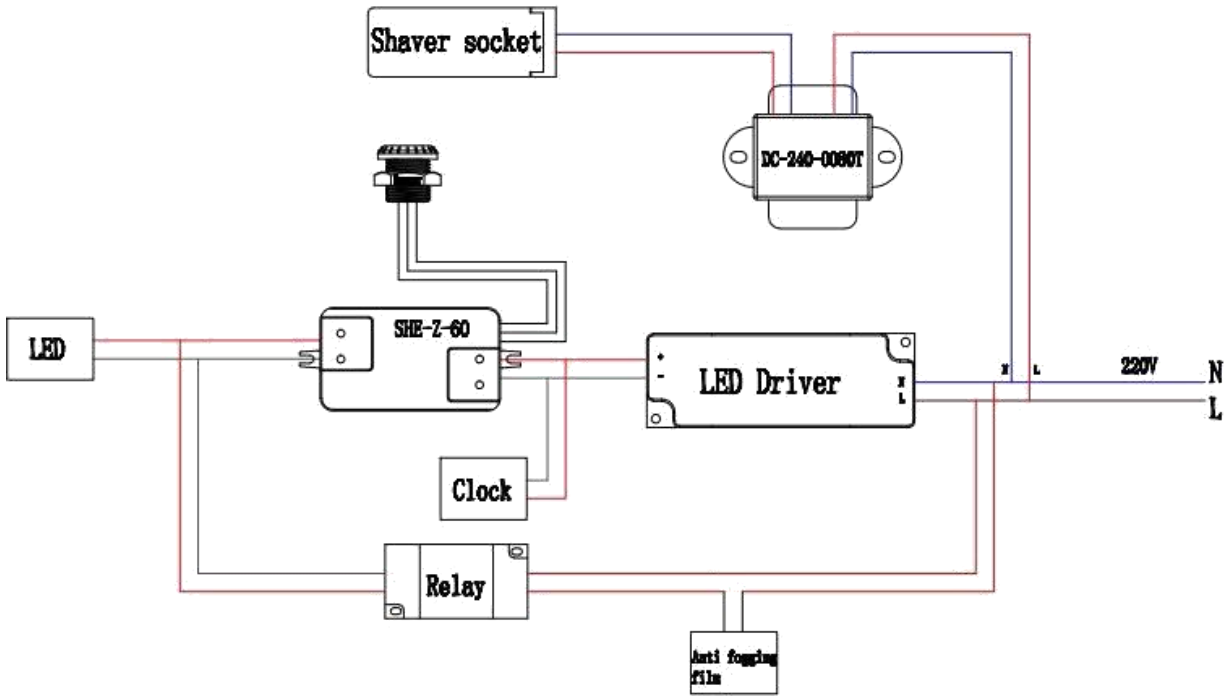

CDC4: Models with anti-fog/ sensor switch/ shaver socket/ bluetooth

