Ax1 Chair Seat



Ex1 Chair Base



Bx1 Seat Mechanism

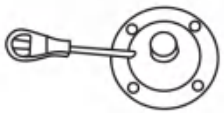

Fx5 Casters



Cx1 Telescopic Bellows



Gx4 Screws M6x16mm



Dx1 Gas Lift



Hx1 Allen Wrench



1

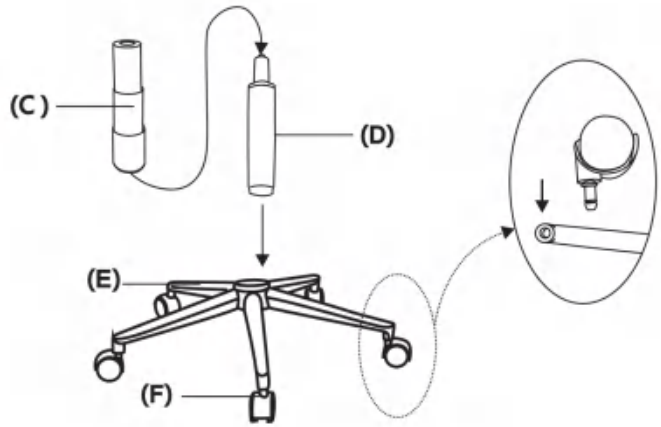

2 Gx4

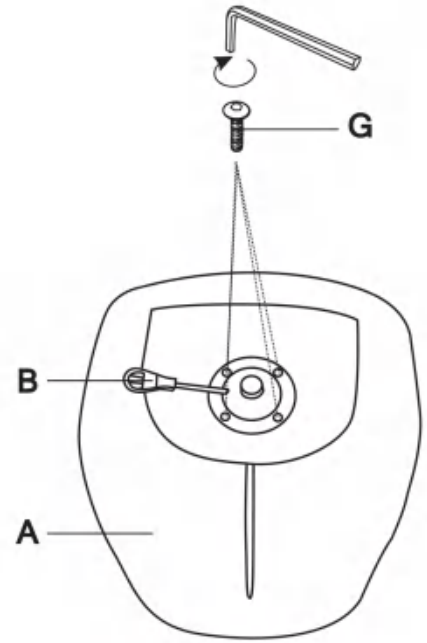

3

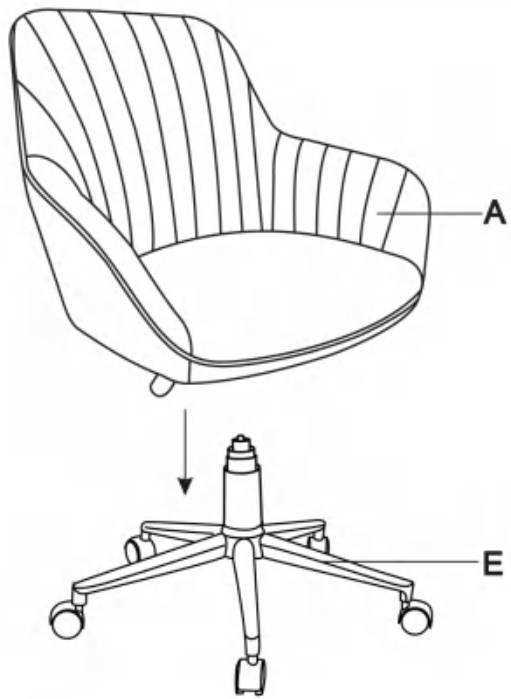

4

