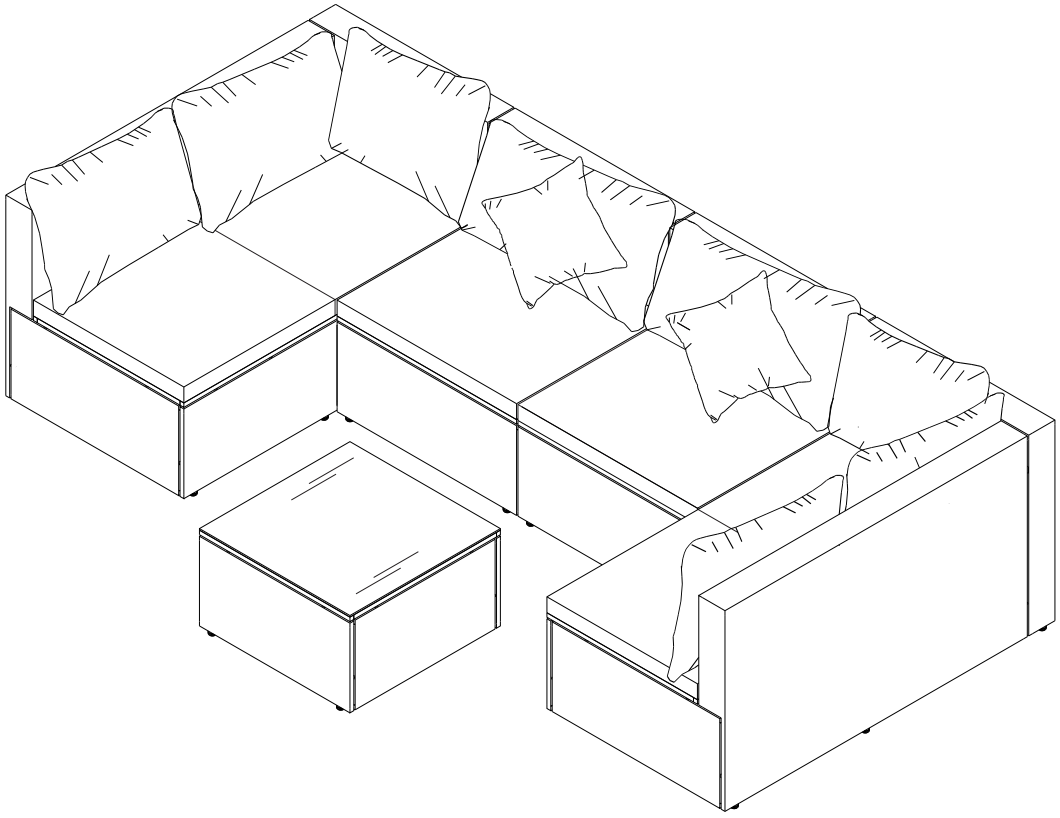

USER'S MANUAL

RATTAN PATIO LOUNGER SET

*Please allow 2 days for shrink wrap cushion back normal thickness after open.



280 LBS CHAIR CAPACITY

570 LBS SOFA CAPACITY

110 LBS TABLE CAPACITY

1 PERSON ASSEMBLY

APPROXIMATELY 60 MIN. ASSEMBLY

Contact Us!

Need Help! Do NOT return this item.

Contact our friendly customer service department for help first.

Before You Start

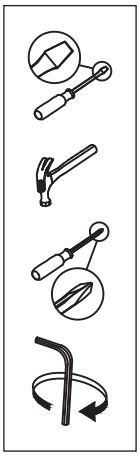

- Please do not exceed the weight limitation of each items
- Do not stand on or use any part of this item as step ladder
- Read each step carefully before starting. It is very important to ensure each step followed in correct order, otherwise assembly difficulties may occur.
- Most of board parts are labeled or stamped on the raw edges. Have a check to make sure all parts are included.
- Work in a spacious area, preferably on a carpet close to where the unit will be used.
- Keep the handtools close at hand. Do not use power tools to assemble your furniture. They may scratch or damage the parts.
- Manufacturer and seller expressly disclaim any and all liability for personal injury, property damage or loss, whether direct, indirect, or incidental, resulting from incorrect attachment, improper use, inadequate maintenance, or neglect of this product.
- To entitle refund, all return must in its original product packaging with all accessories are included. Pictures return may required as evidence and the responsibilities will pass to us untill the item has been received by our side. All returned fee under customer's expense.

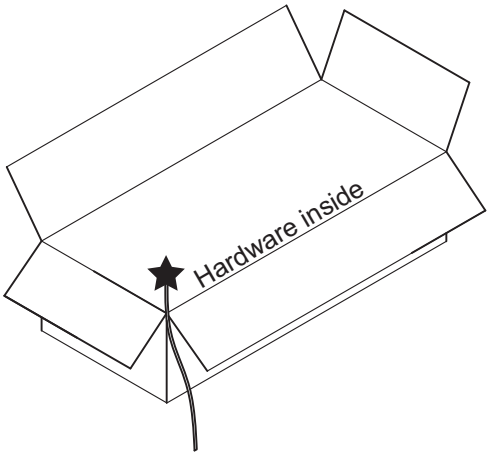

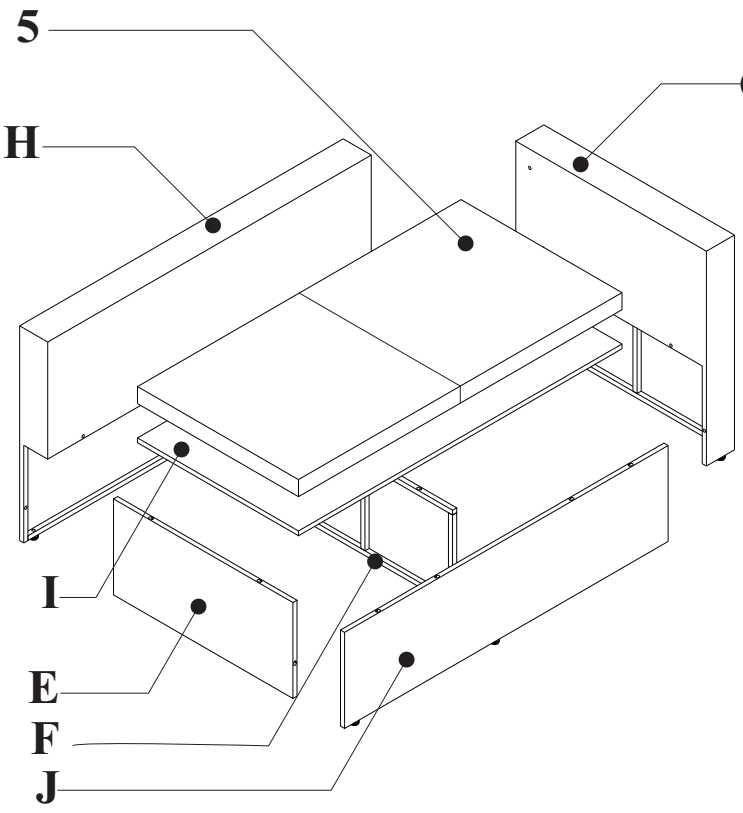

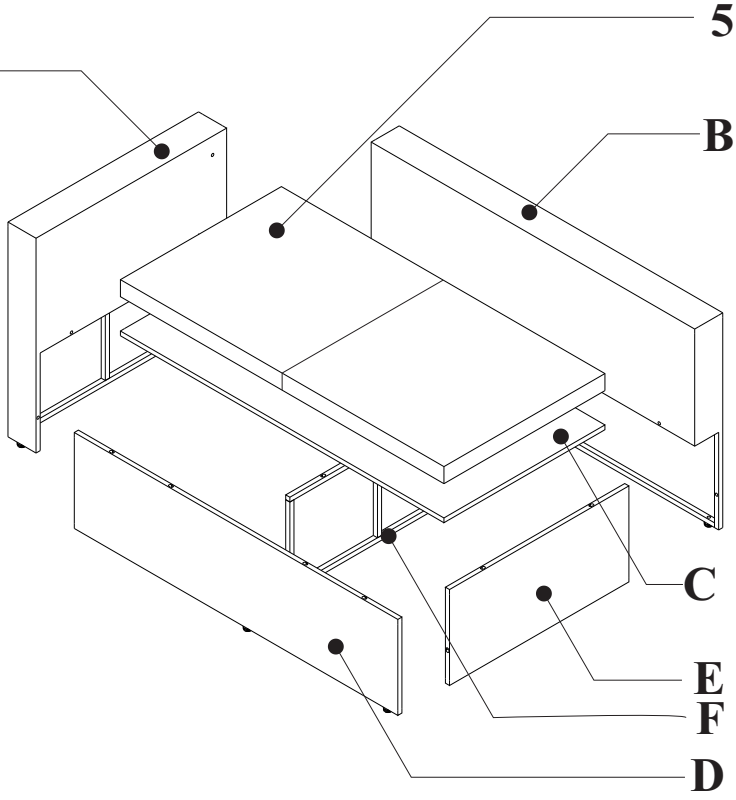

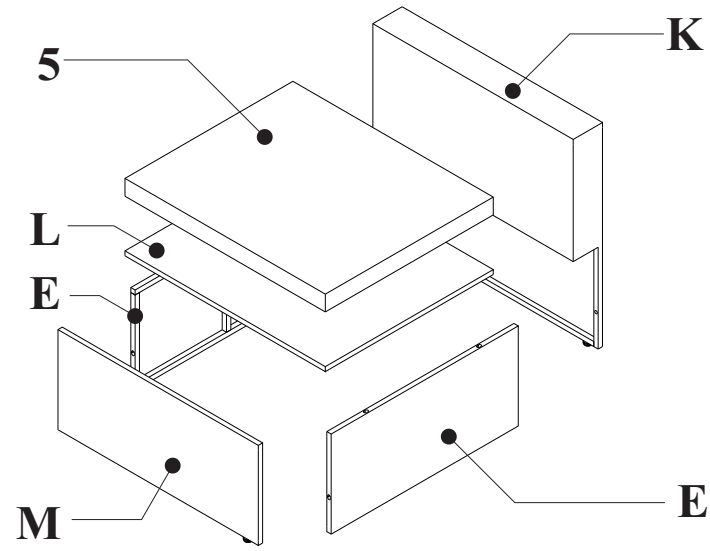

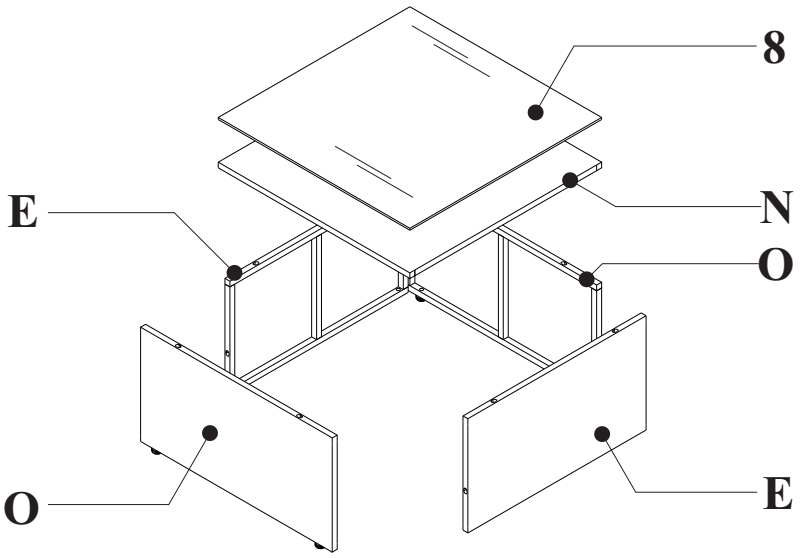

Notice:

1. **50% Tighten before fixing all screws, Allen wrench is recommended instead of an electric drill.**
2. **Place the item on a flat ground to adjust and make sure it remains stable.**
3. **Tighten up all screws with tools gradually.**
4. **If the screws are not aligned with holes during assembly, please loosen all the other screws to 50% and continue the assembly process.**
5. **If the item is not stable, please loosen all the screws, adjust it on a flat ground and tighten up all screws again.**
6. **Note : If one or some screws are fully tightened during assembly, chances are the others will not be aligned with holes. In addition, all the holes are designed to be relatively larger to provide more space for the adjustment of the screws.**

A

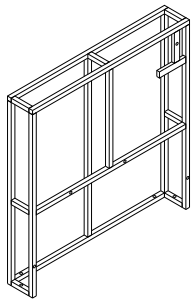

Right frame (1 pc)

B

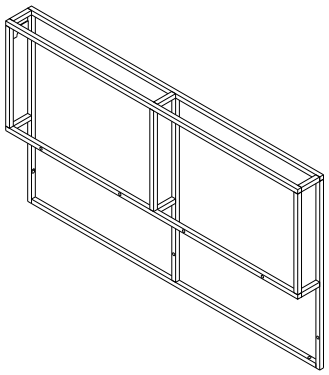

Back frame (1 pc)

C

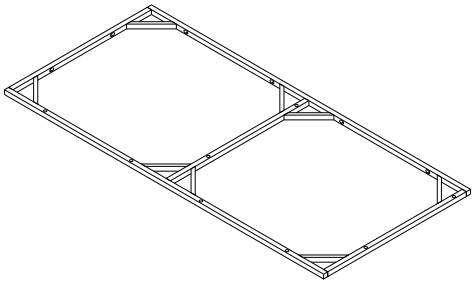

Seat frame (1 pc)

D

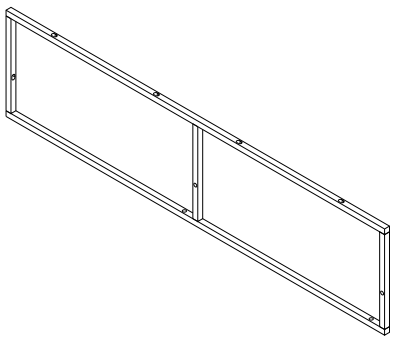

Front frame (1 pc)

E

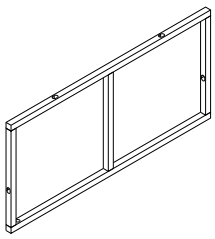

Side frame (8 pcs)

F

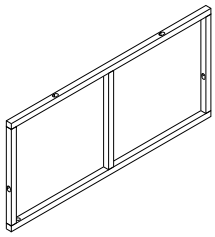

Inner frame (2 pcs)

G

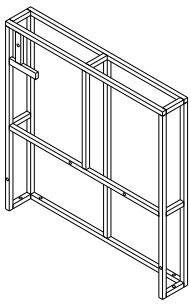

Left frame (1 pc)

H

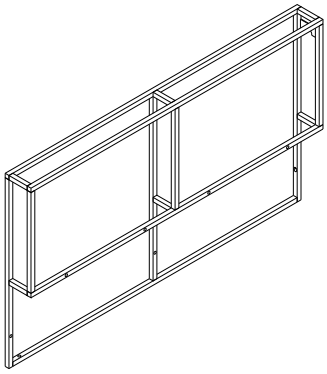

Back frame (1 pc)

I

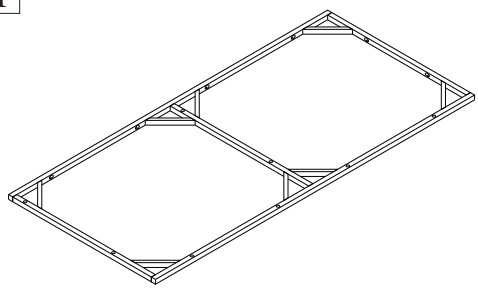

Seat frame (1 pc)

J

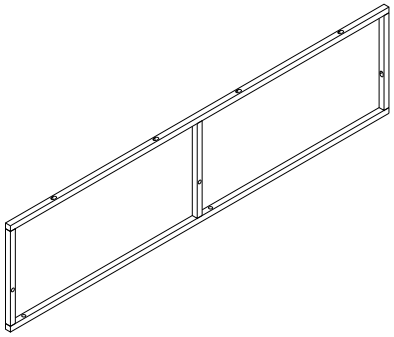

Front frame (1 pc)

K

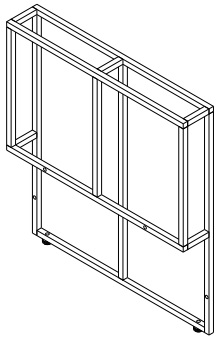

Back frame (2 pcs)

L

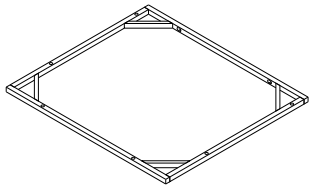

Seat frame (2 pcs)

M

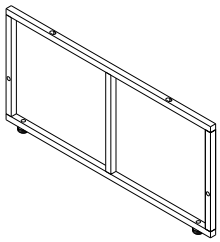

Front frame (2 pcs)

N

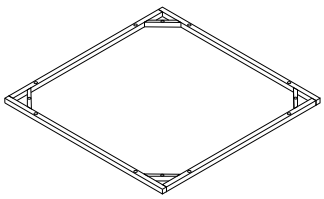

Table top frame (1 pc)

O

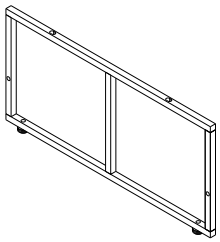

Big side frame (2 pcs)

1 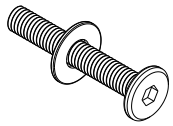 Bolt M6x35mm (68 pcs)	2 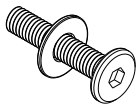 Bolt M6x30mm (8 pcs)	3 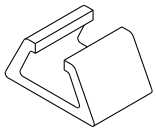 Sofa connector (6 pcs)
4 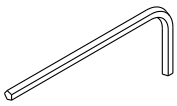 Allen key (1 pc)	5 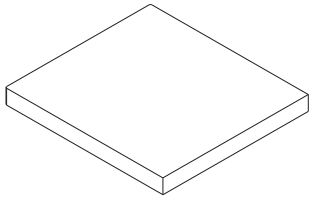 Seat cushion (6 pcs)	6 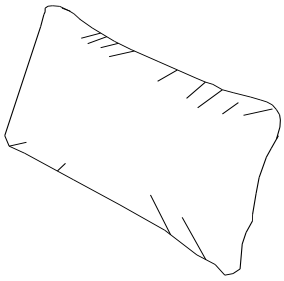 Back pillow (6 pcs)
7 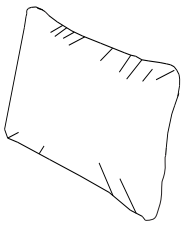 Small back pillow (2 pcs)	8 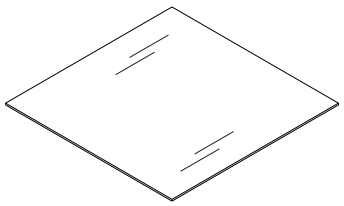 Table glass (1 pc)	9 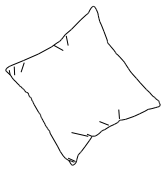 Pillow (2 pcs)

STEP 1

Connect Back frame (B) & Seat frame (C) with Bolt (1)

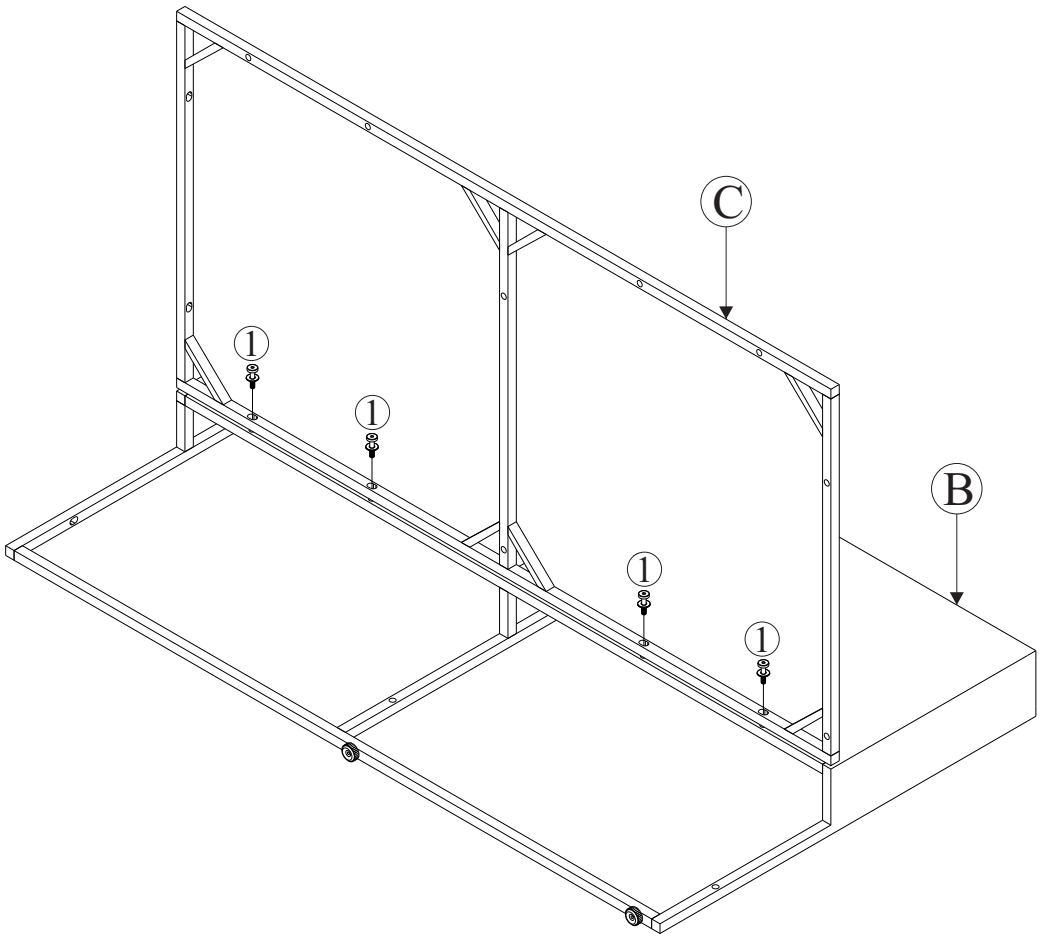

1



4 pcs

STEP 2

Connect part from STEP 1 & Right frame (A) with Bolt (1)

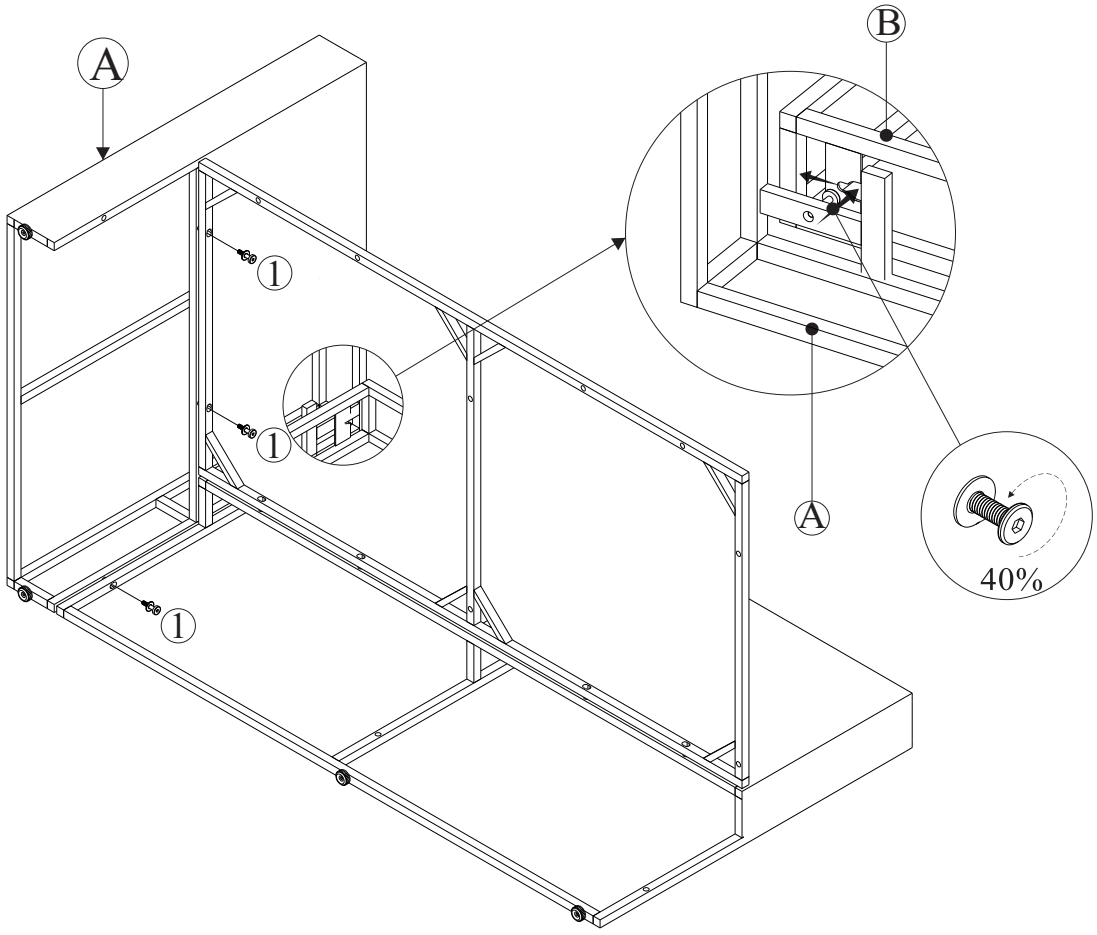

1



3 pcs

STEP 3

Connect part from STEP 2 & Side frame (E), Inner frame (F) with Bolt (1) & (2)

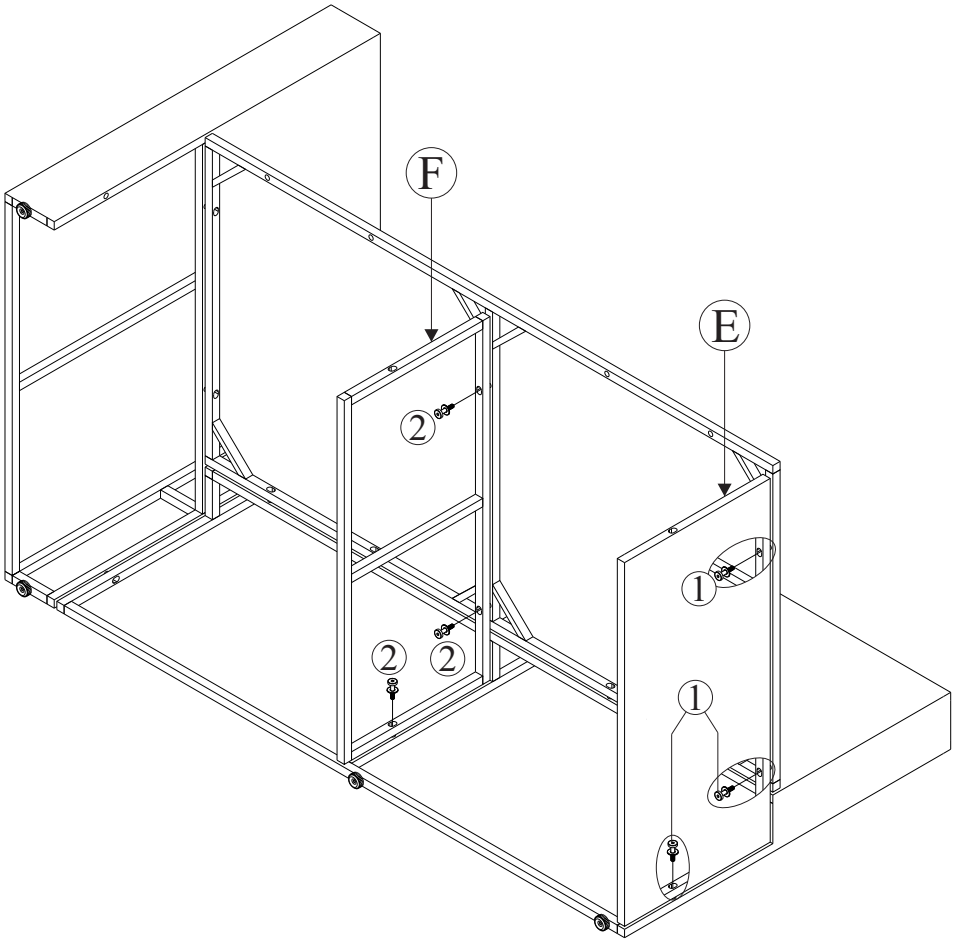

1	2
3 pcs	3 pcs

STEP 4

Connect part from STEP 3 & Front frame (D) with Bolt (1) & (2)

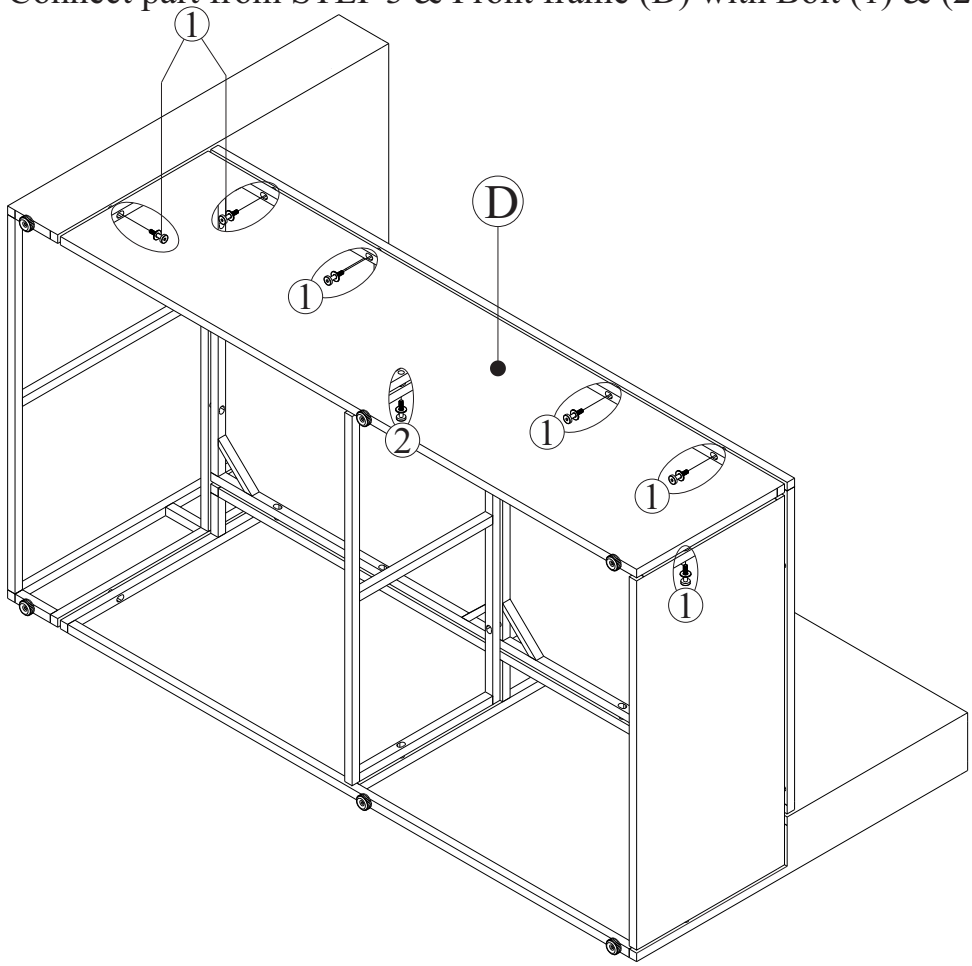

1	2
6 pcs	1 pc

STEP 5

Connect Back frame (H) & Seat frame (I) with Bolt (1)

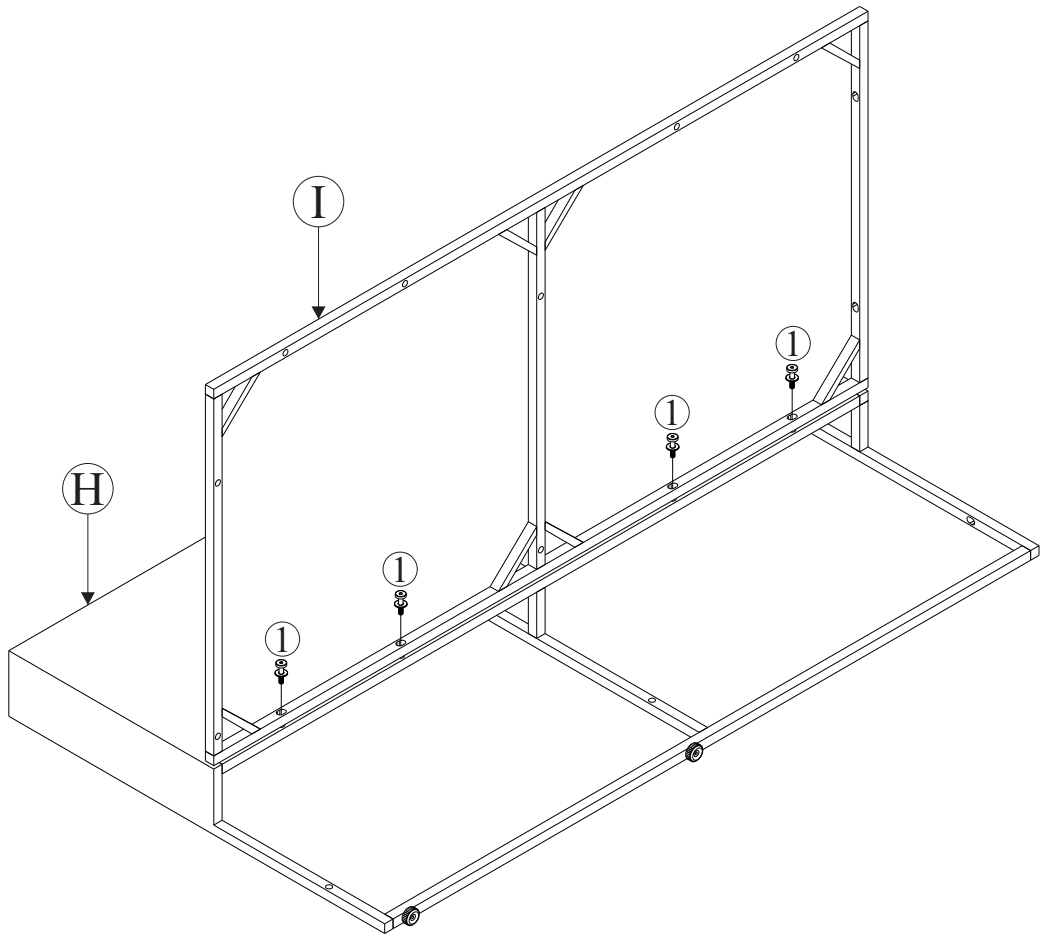

1

4 pcs

STEP 6

Connect part from STEP 5 & Left frame (G) with Bolt (1)

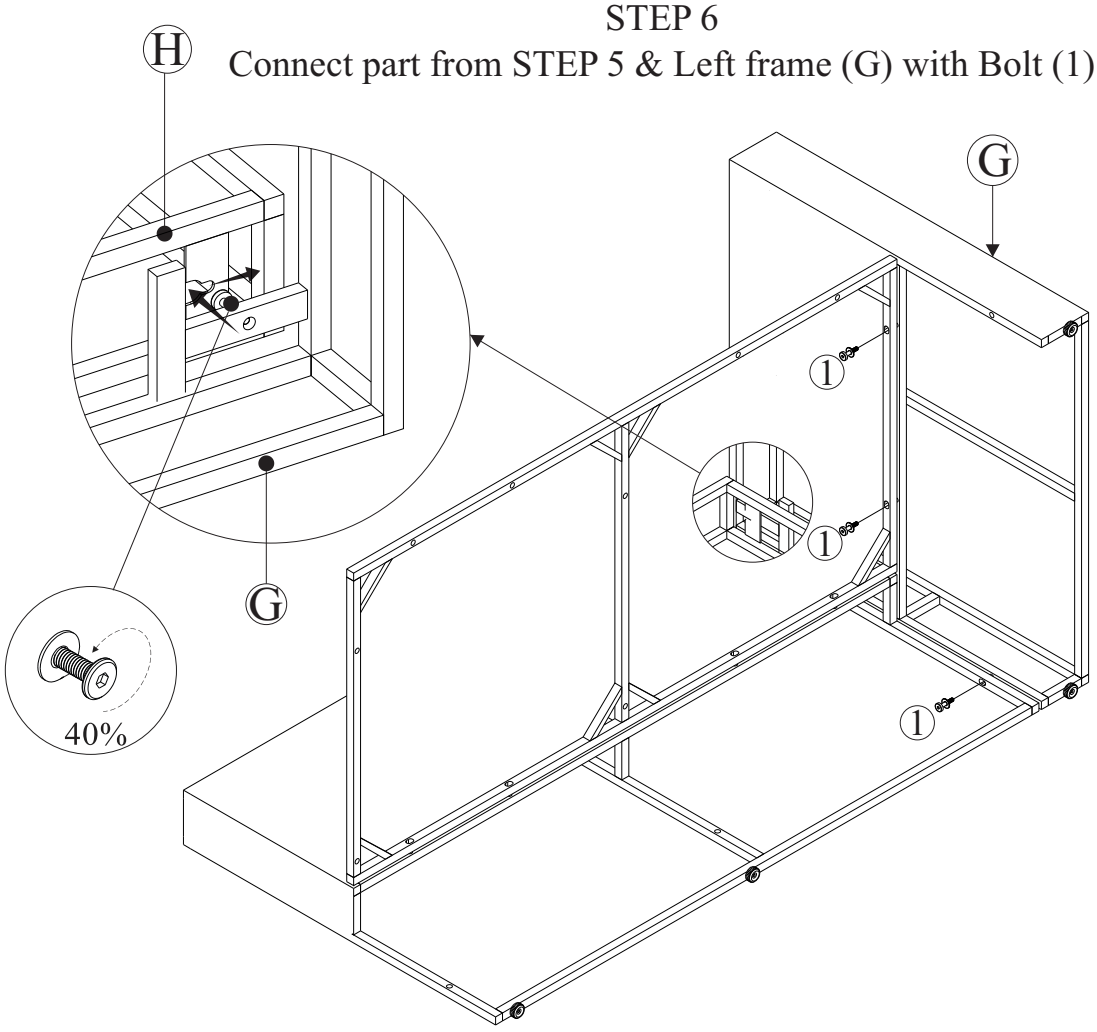

1

3 pcs

STEP 7

Connect part from STEP 6 & Side frame (E), Inner frame (F) with Bolt (1) & (2)

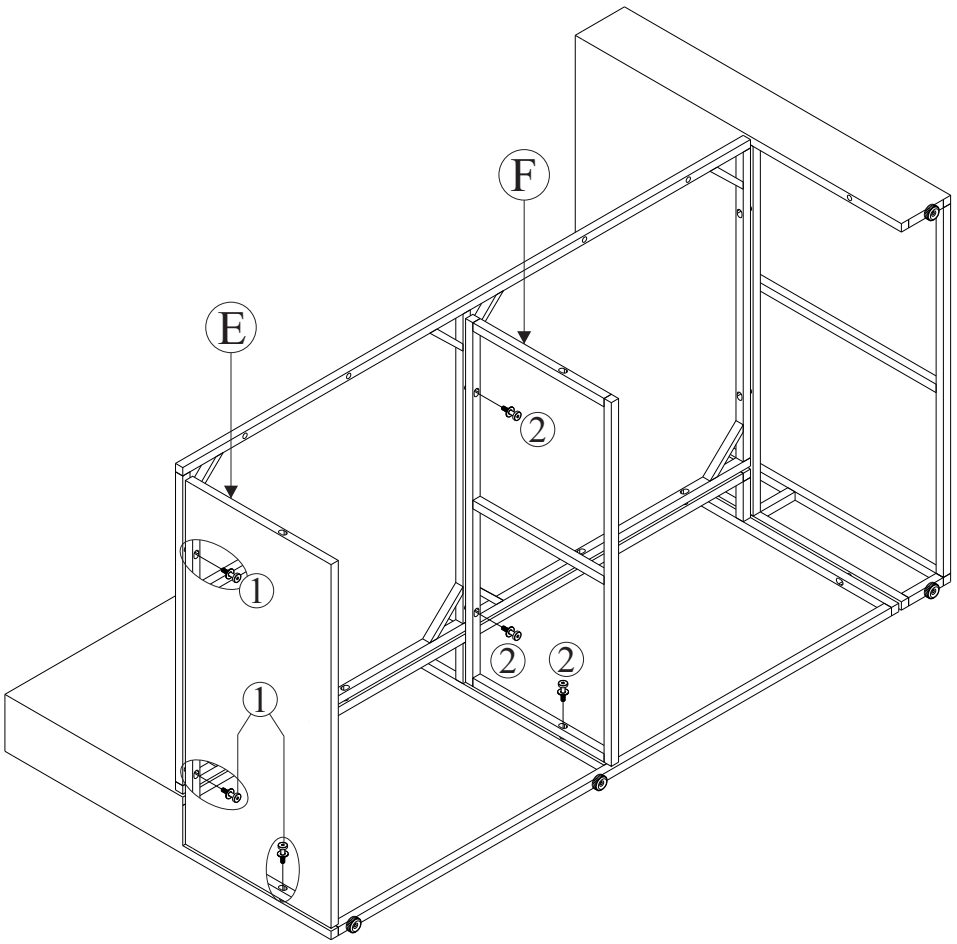

1	2
3 pcs	3 pcs

STEP 8

Connect part from STEP 7 & Front frame (J) with Bolt (1) & (2)

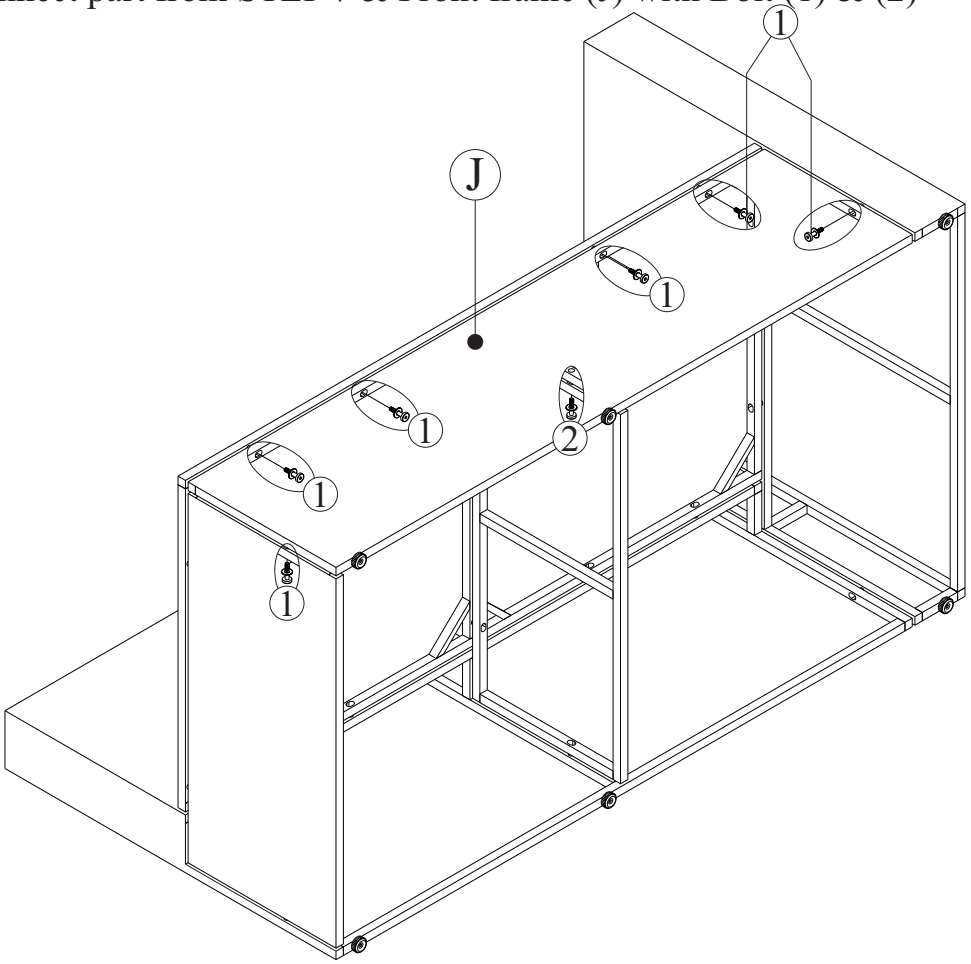

1	2
6 pcs	1 pc

STEP 9

Connect Back frame (K) & Seat frame (L) with Bolt (1)

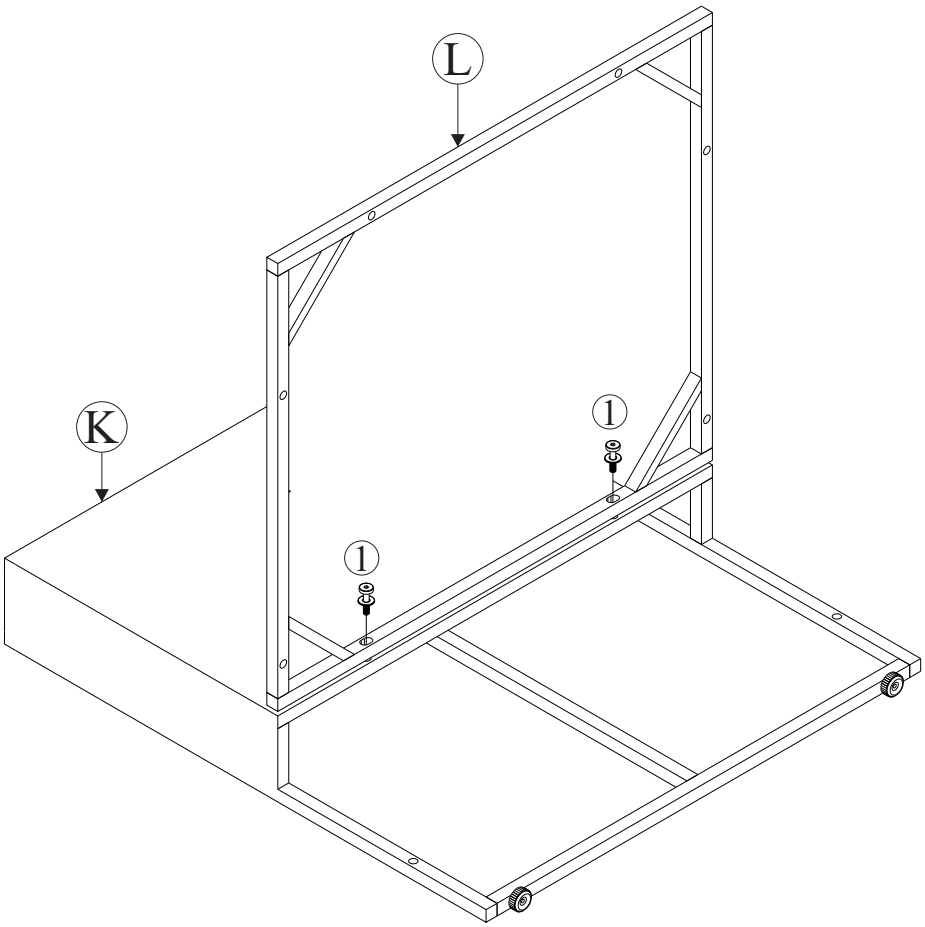

1



2 pcs

STEP 10

Connect part from STEP 9 & Side frame (E) with Bolt (1)

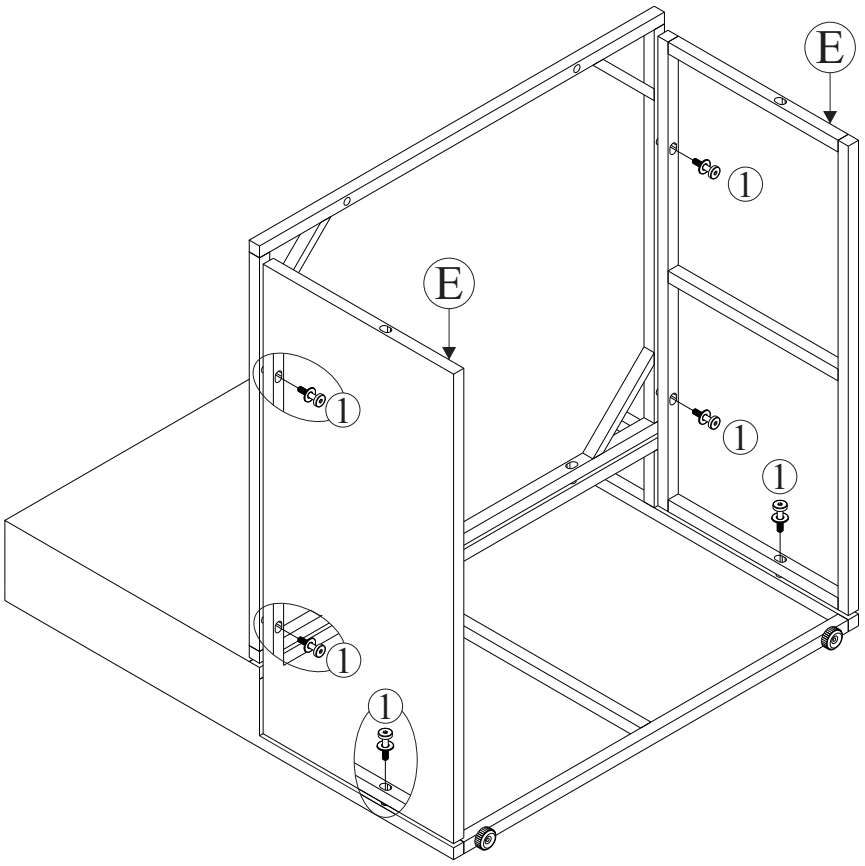

1



6 pcs

STEP 11

Connect part from STEP 10 & Front frame (M) with Bolt (1)

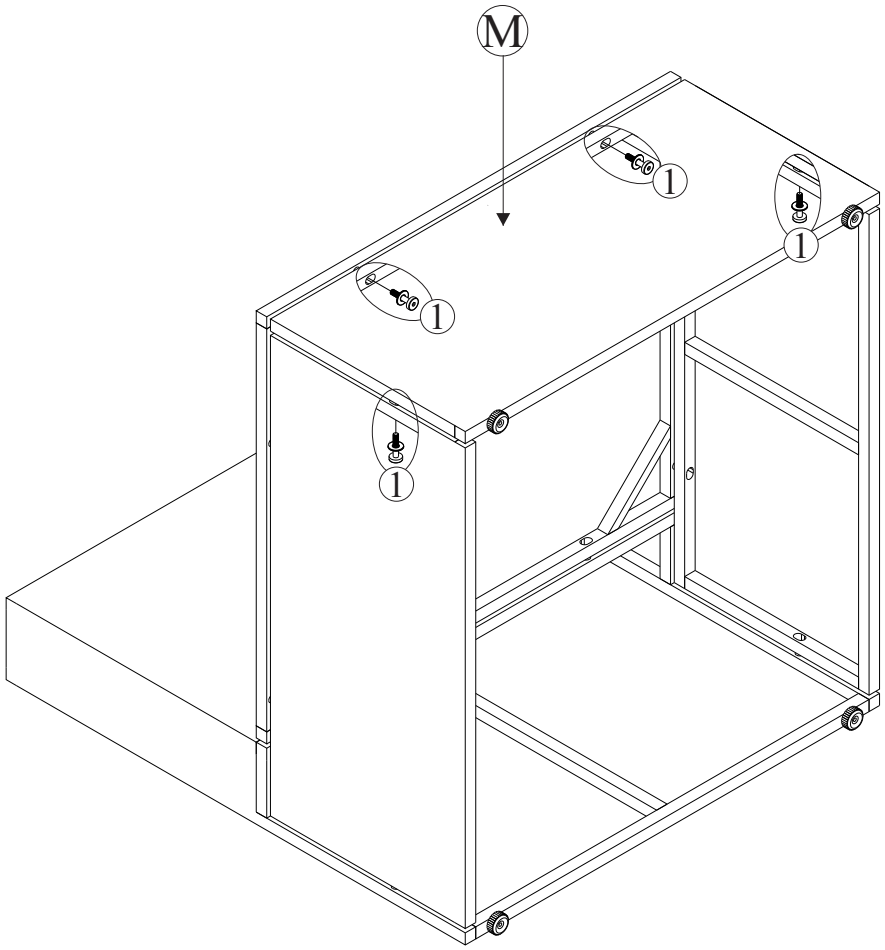

1

4 pcs

STEP 12

Connect Table top frame (N), Big side frame (O) & Side frame (E) with Bolt (1)

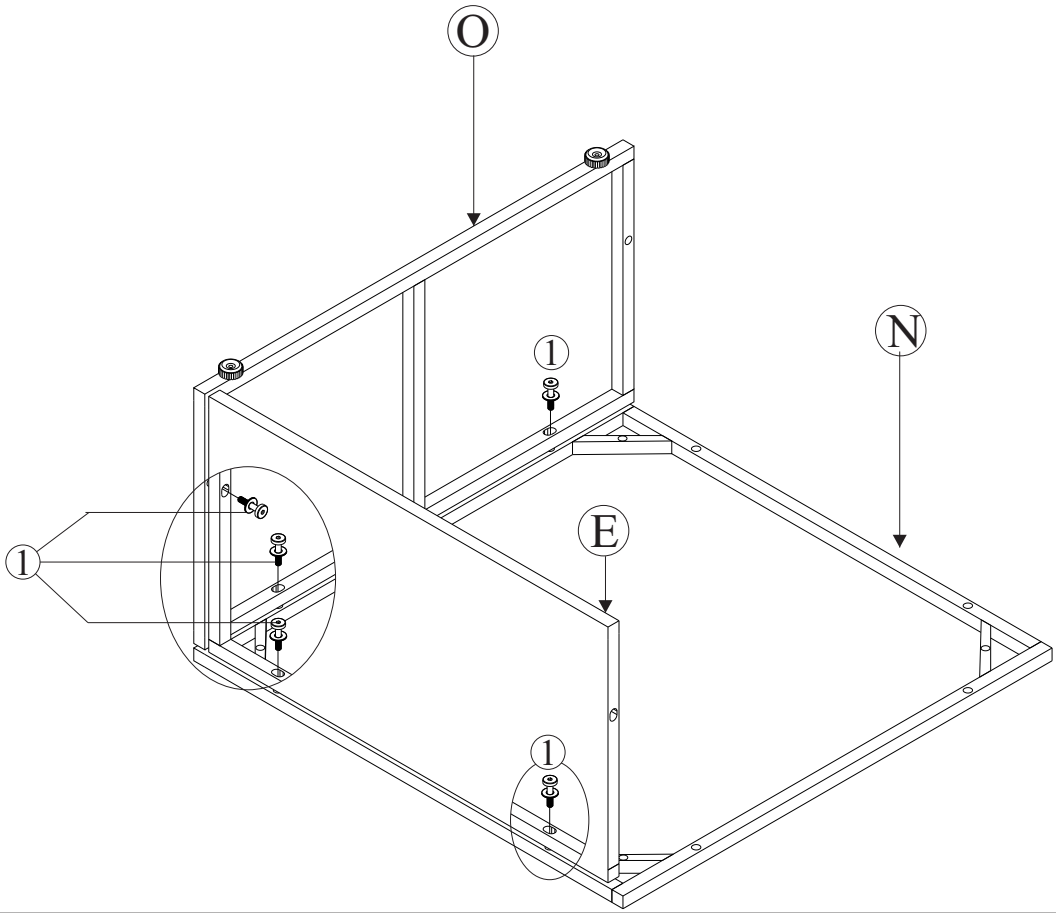

1

5 pcs

STEP 13

Connect part from STEP 12, Big side frame (O) & Side frame (E) with Bolt (1)

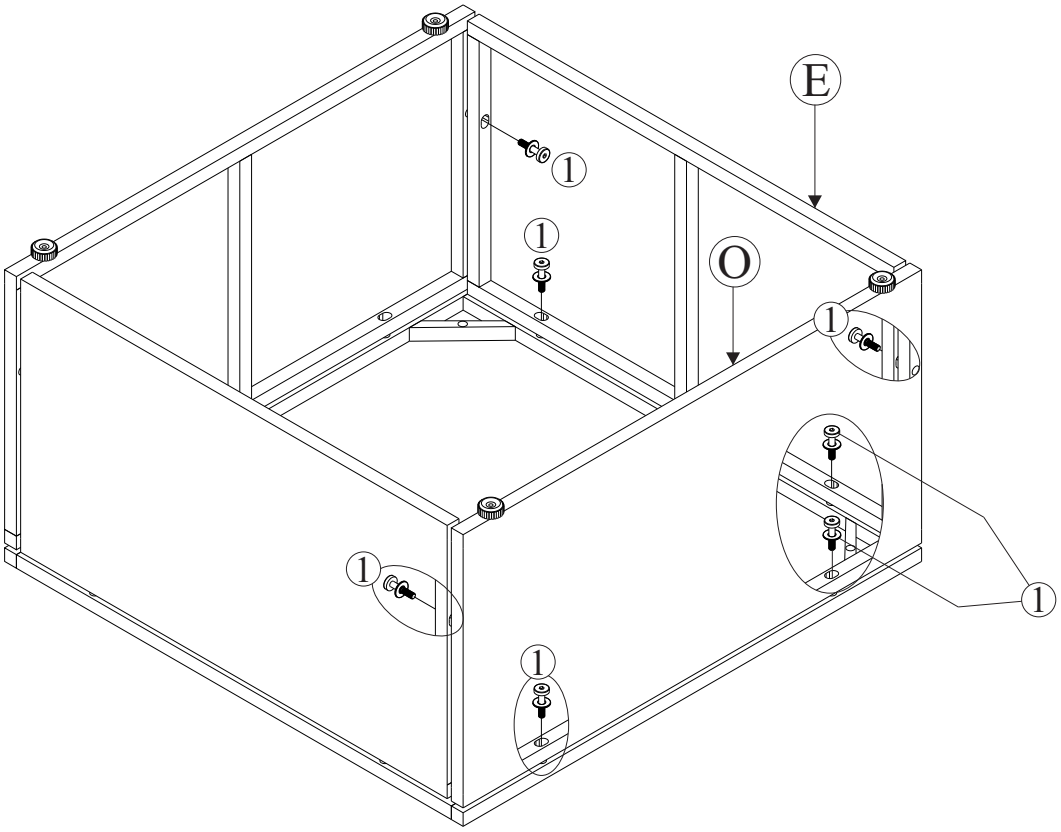

1 	
7 pcs	

STEP 14

After the assembly is complete, link the sofas by Sofa connector (3) as picture.

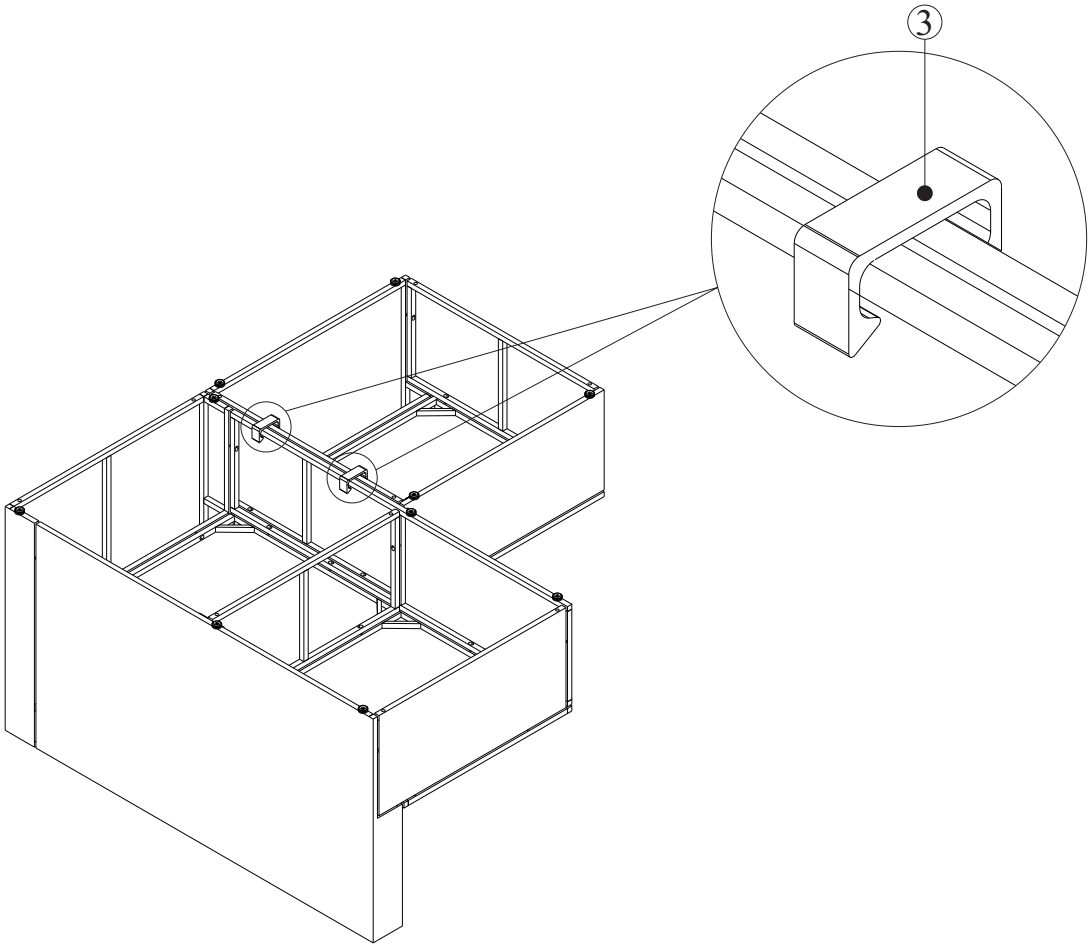

STEP 15

Put on Seat cushion (5), Back pillow (6), Small back pillow (7) & Pillow (9) to complete sofa.

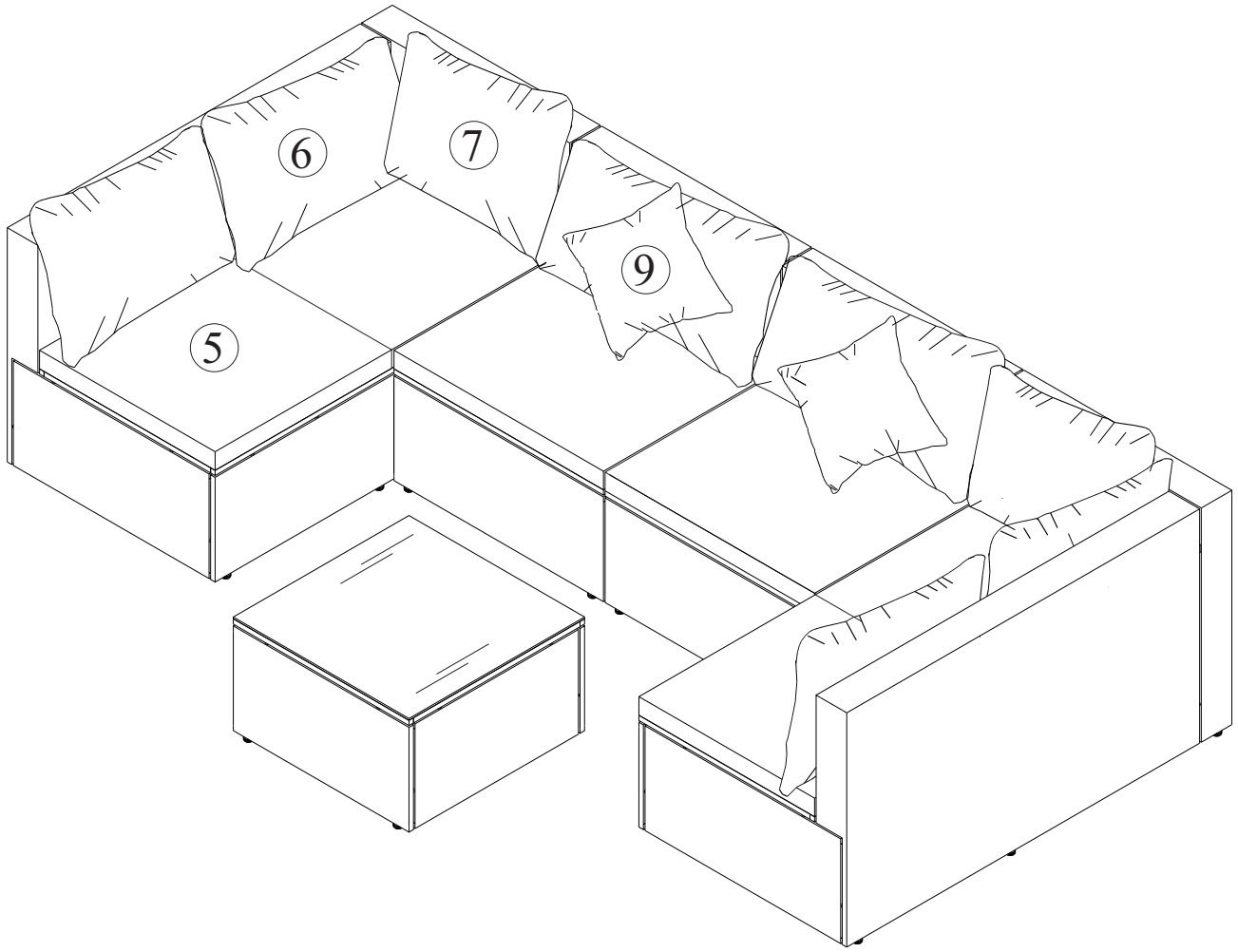

Care and Maintenance

Use a soft, clean cloth that will not scratch the surface when dusting.
Use of furniture polish is not necessary.
Should you choose to use polish, test first in an inconspicuous area.
Using solvents of any kind on your furniture may damage the finish.
Liquid spills should be removed immediately. Using a soft clean cloth, blot the spill gently. Avoid rubbing.
Check bolts/screws periodically and tighten them if necessary.

Further advice about wood furniture care

Please protect your outdoor furniture with a cover when not in use since Long-term sunlight exposure will result in the damage on the surface.
In addition to sunlight damage, wood and metal frame suffers when exposed to extremes in temperature and humidity.
Proper care and cleaning at home will extend the life of your purchase.
Following these important and helpful tips will enhance your furniture as it ages.