91116 Product Installation Instructions

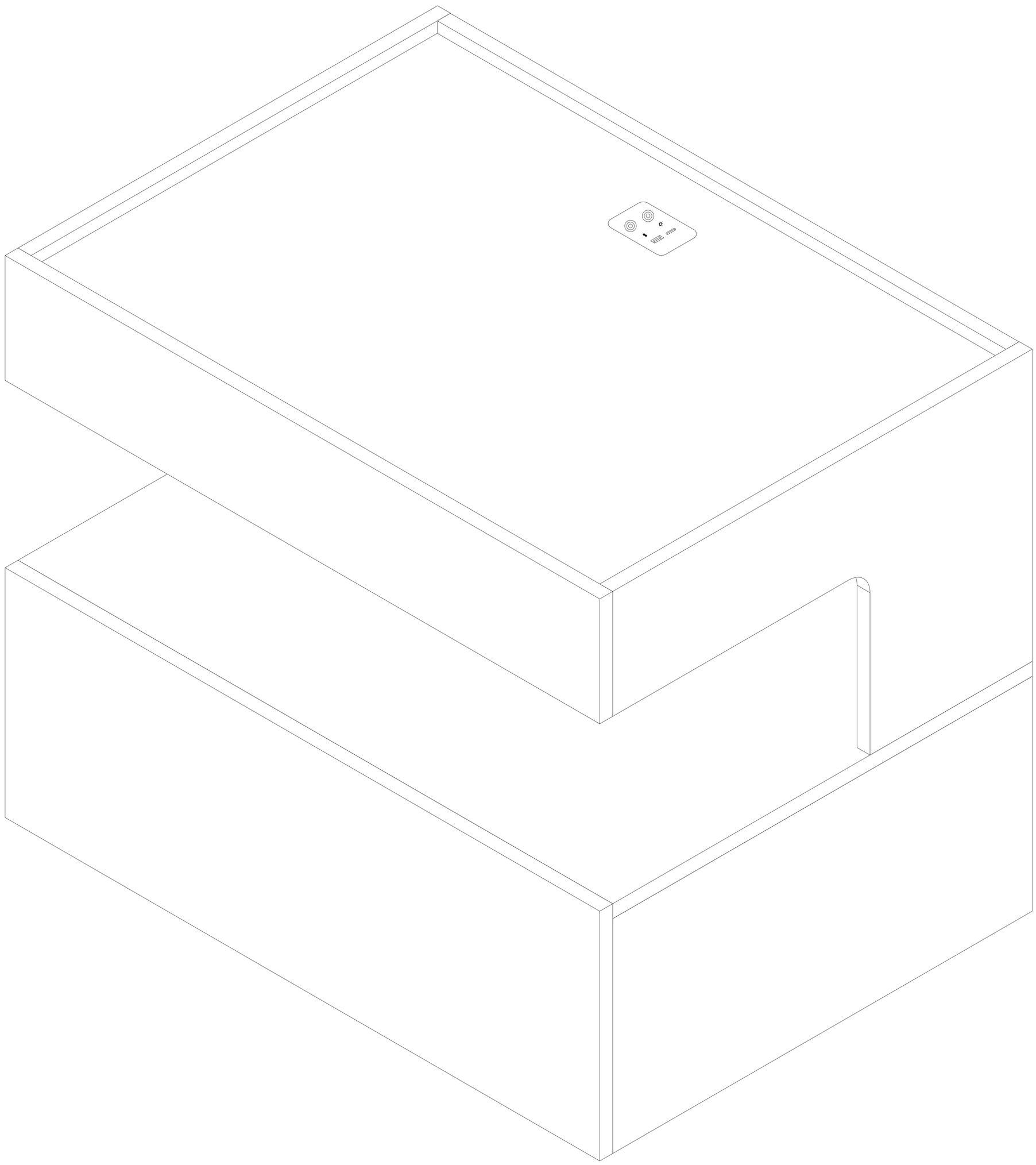

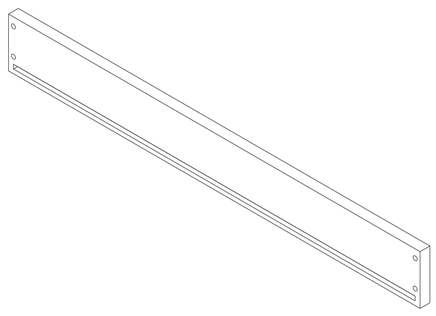

1x1

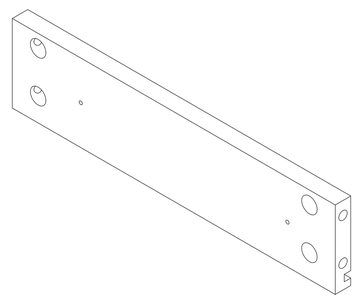

2x1

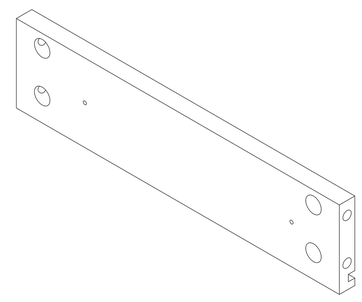

3x1

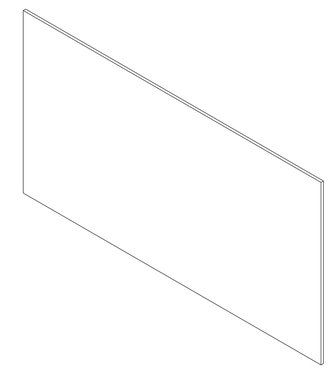

4x1

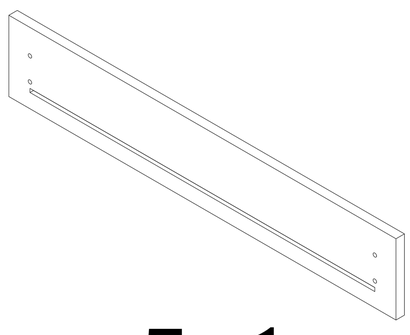

5x1

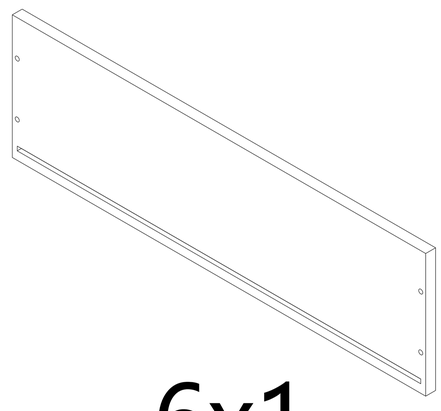

6x1

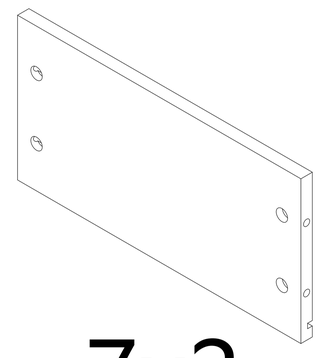

7x2

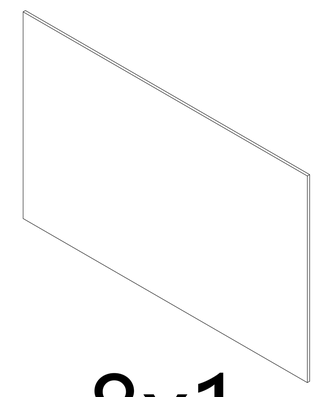

8x1

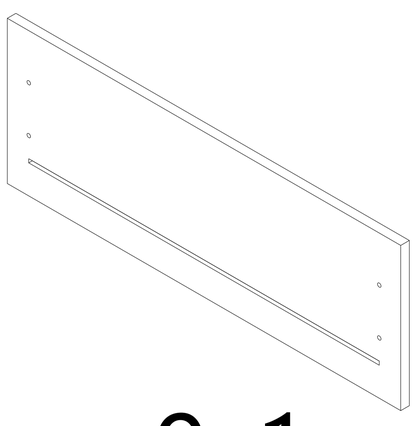

9x1

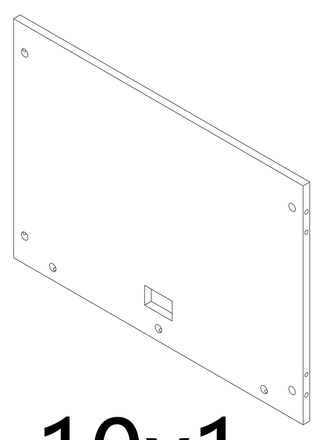

10x1

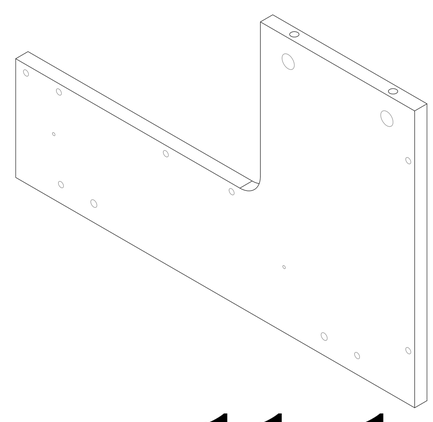

11x1

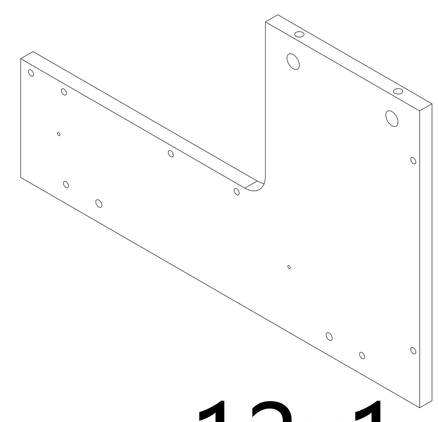

12x1

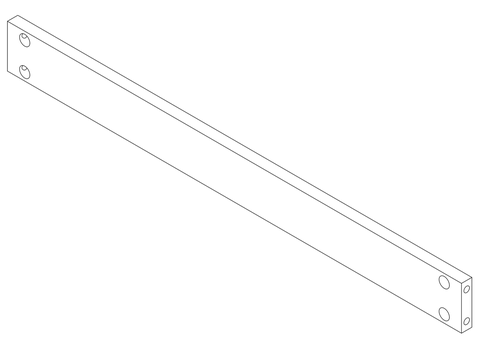

13x1

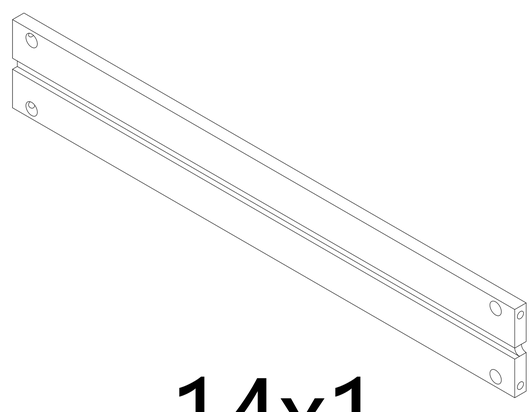

14x1

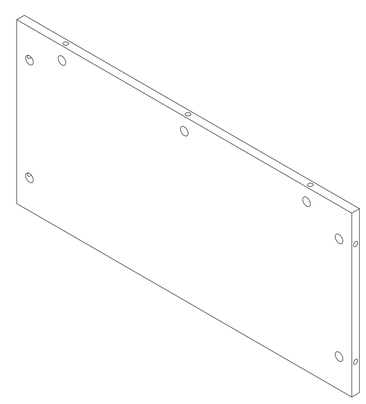

15x1

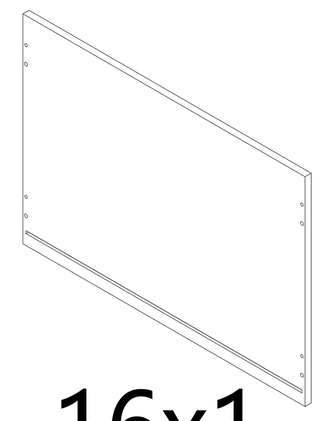

16x1

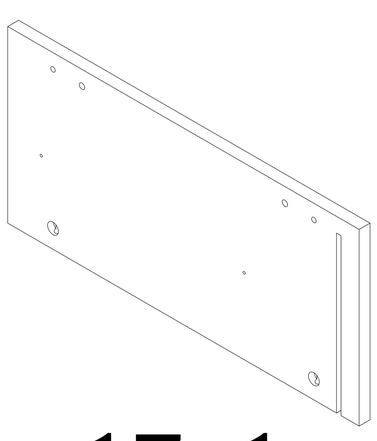

17x1

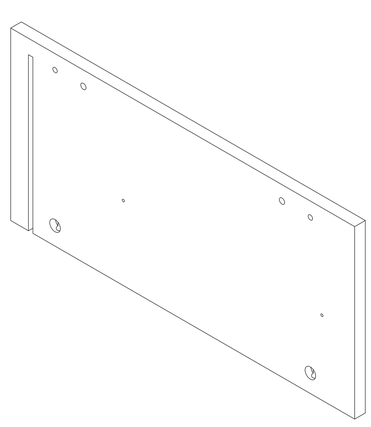

18x1

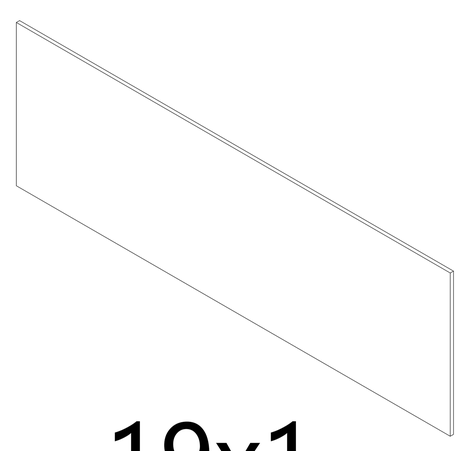

19x1

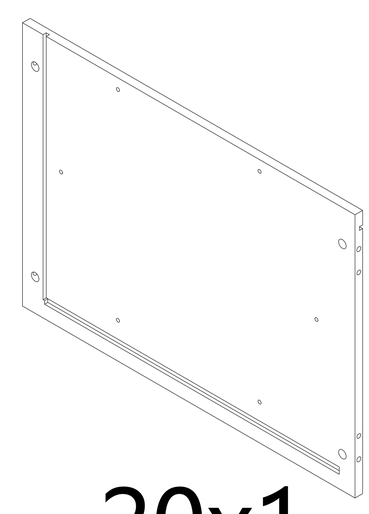

20x1

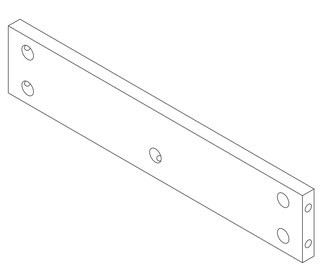

21x2

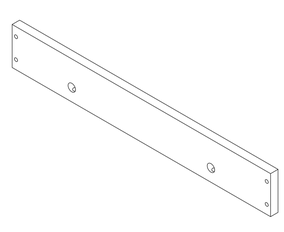

22x2

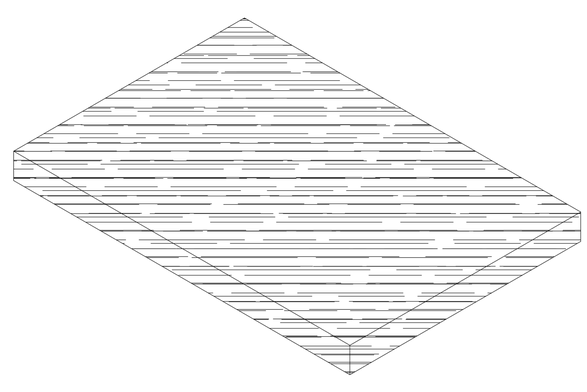

23x1

1

Accessories list

A		Two In One Screw (6x28mm)	64pcs +5pcs
B	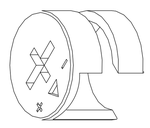	Two In One Nut (10x12mm)	64pcs +5pcs
C	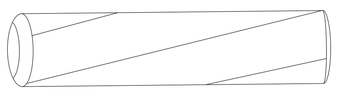	Wood Chipping (6x30mm)	12pcs +2pcs
D	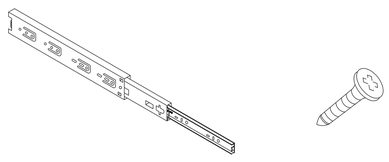	Screw & Guide(10inch) (3x12mm)	2pcs / 10pcs +2pcs
E	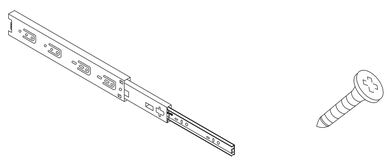	Screw & Guide(12inch) (3x12mm)	2pcs / 10pcs +2pcs
F	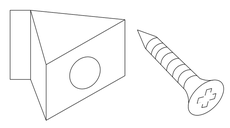	Fixing clip & screw	6pcs +2pcs
G		Non-slip pads	8pcs +1pcs
	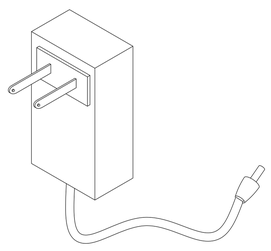	AC/DC Adapter(12V ⎓2.0A)	1pcs

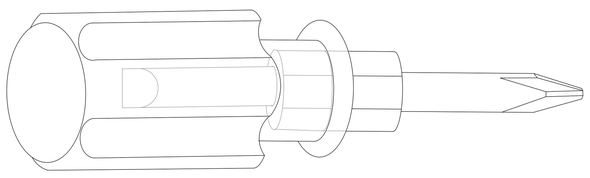

1pcs

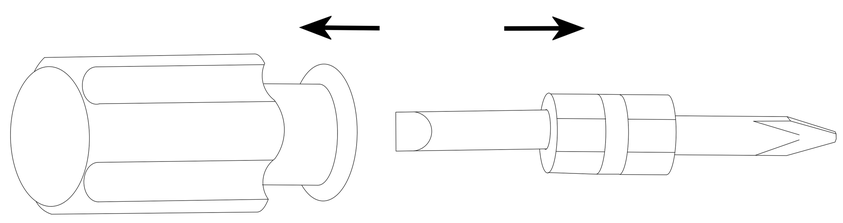

Double-head screwdriver, use as required

Product structure decomposition

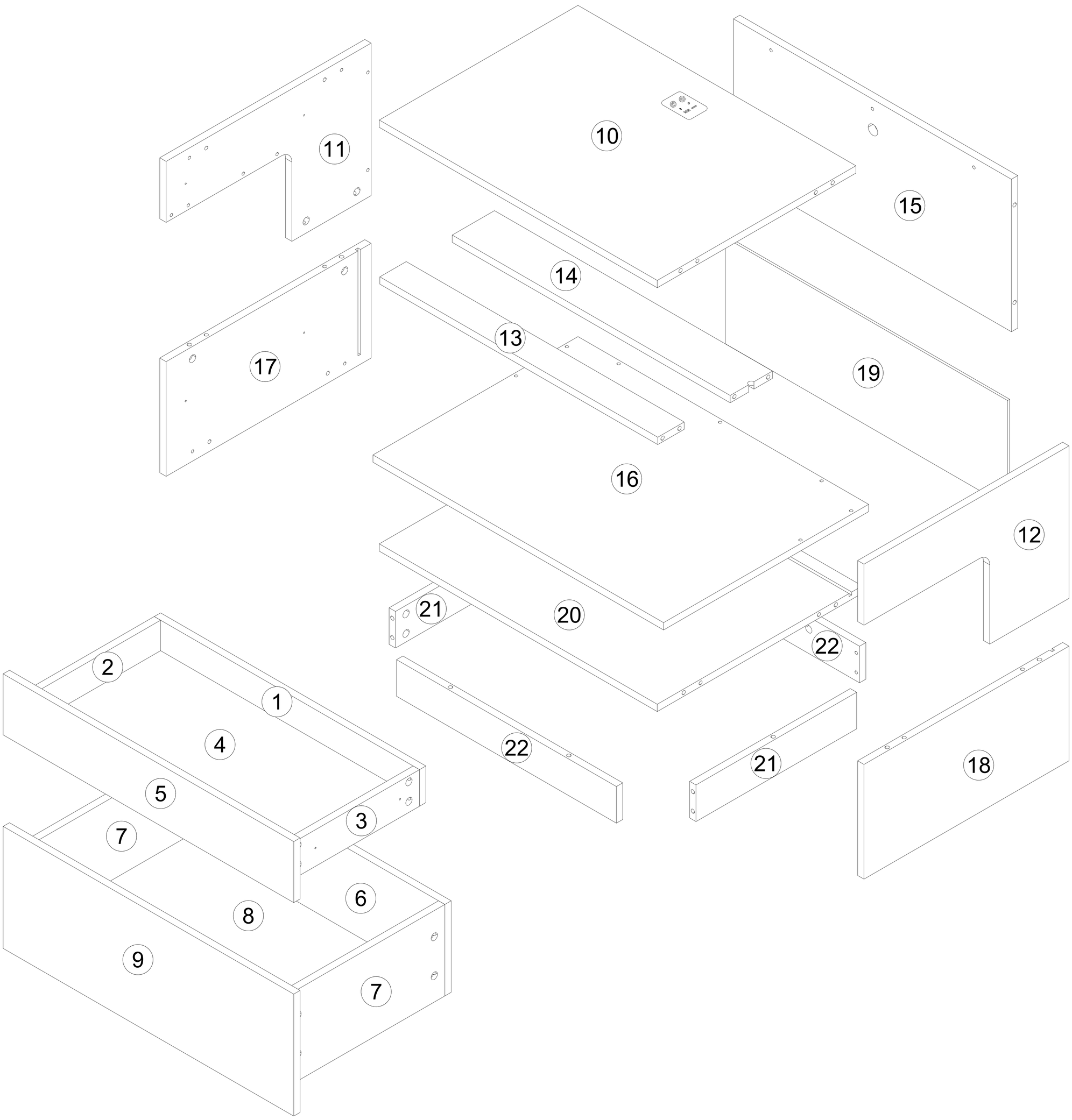

A		16pcs	B	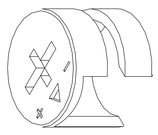	16pcs
D	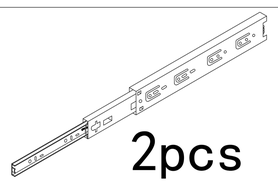 2pcs	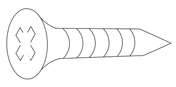 6pcs	E	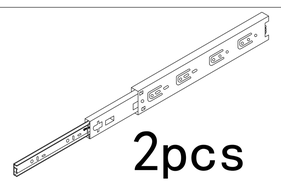 2pcs	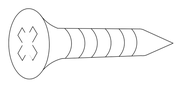 6pcs

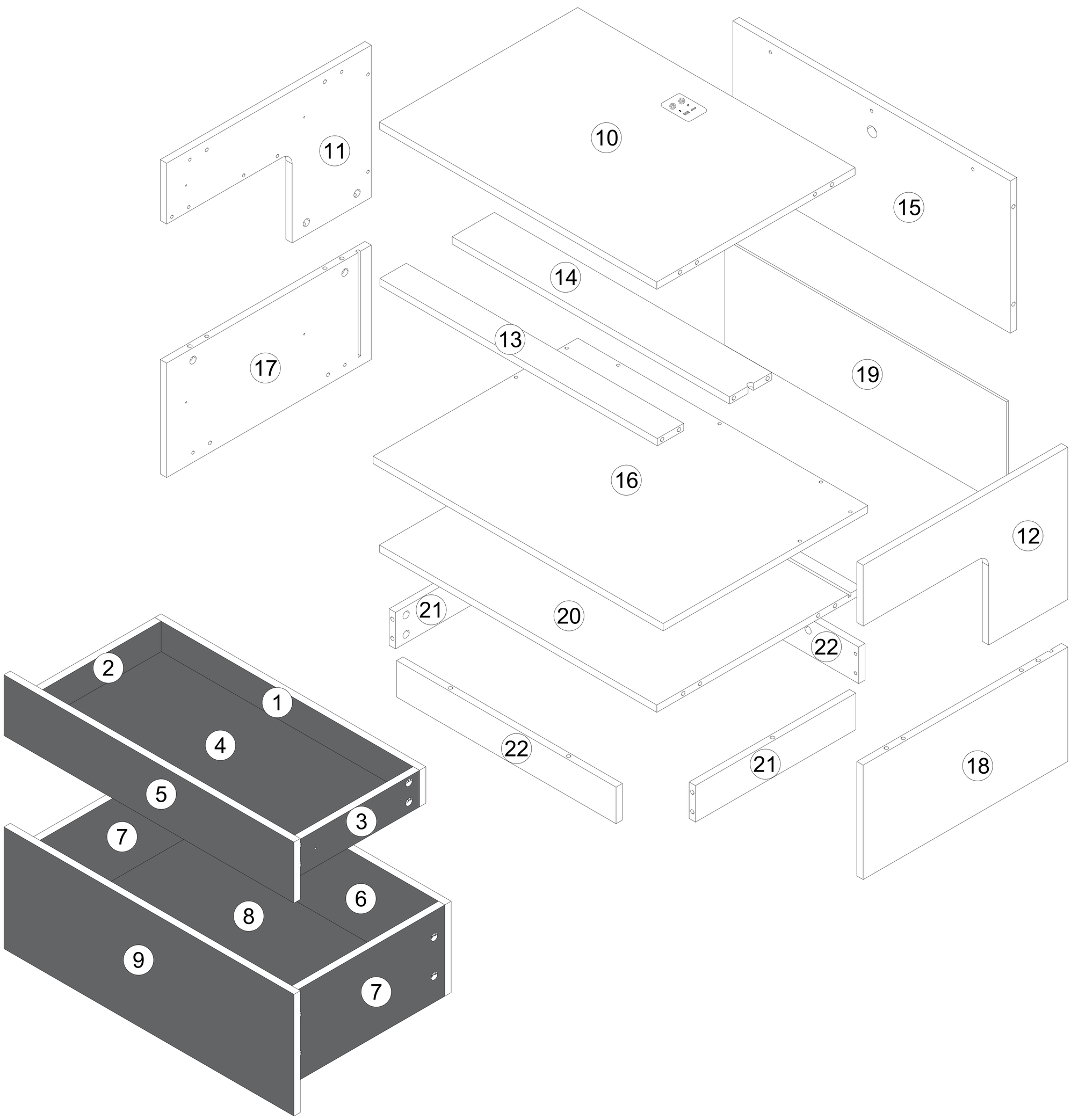

Screw installation method

Step1

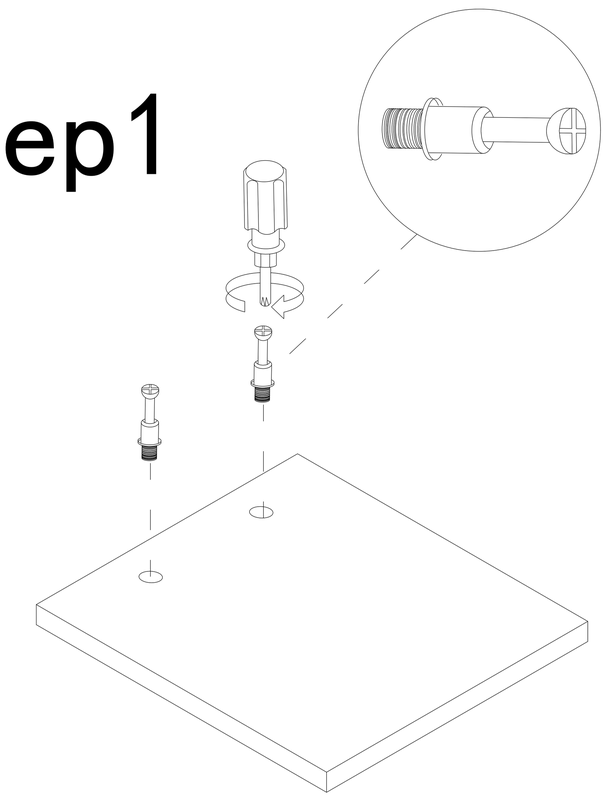

Step2

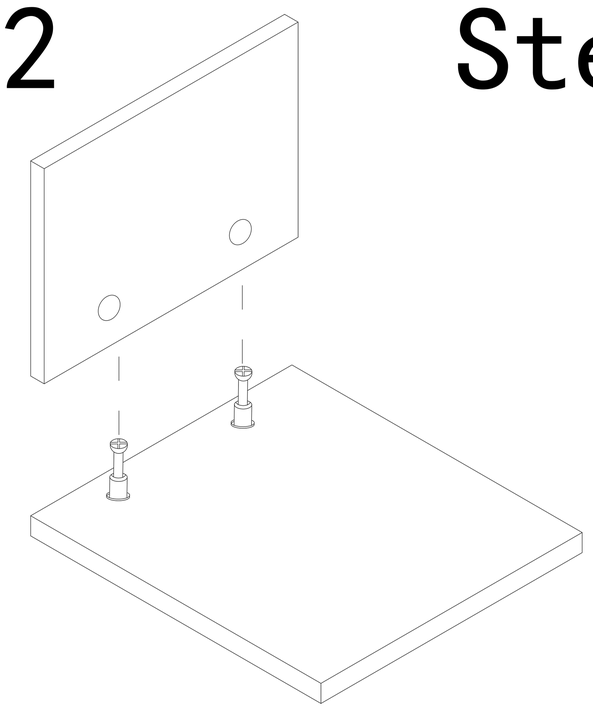

Step3

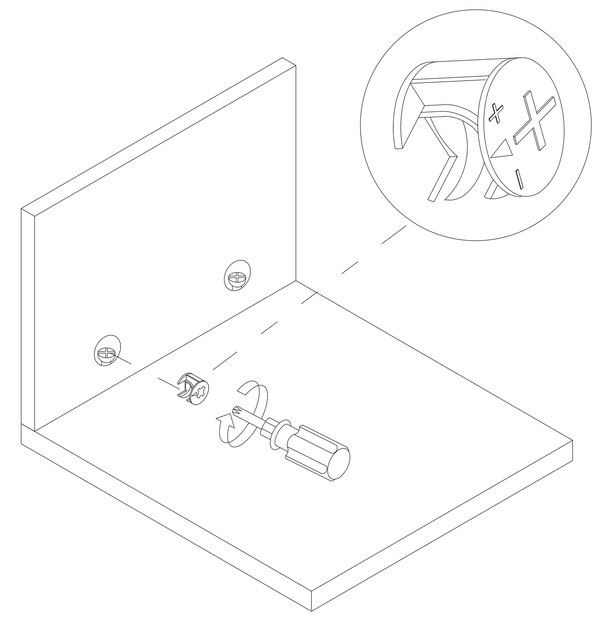

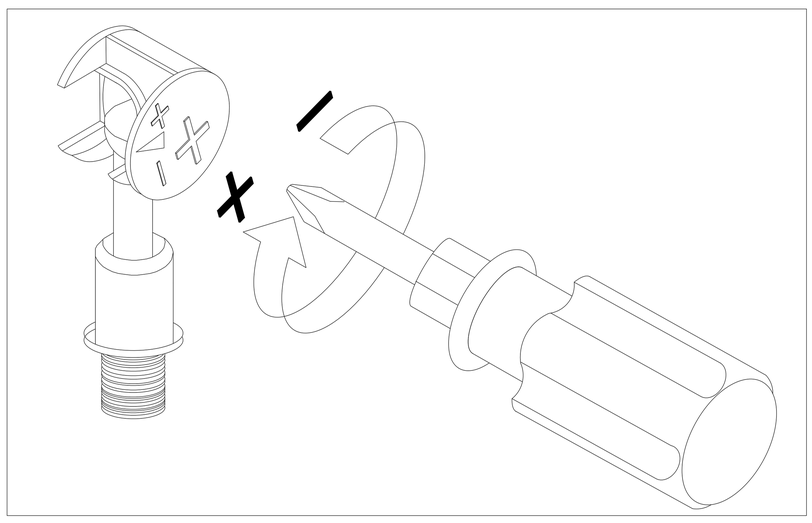

Use a screwdriver to lock in the direction of the "+" sign

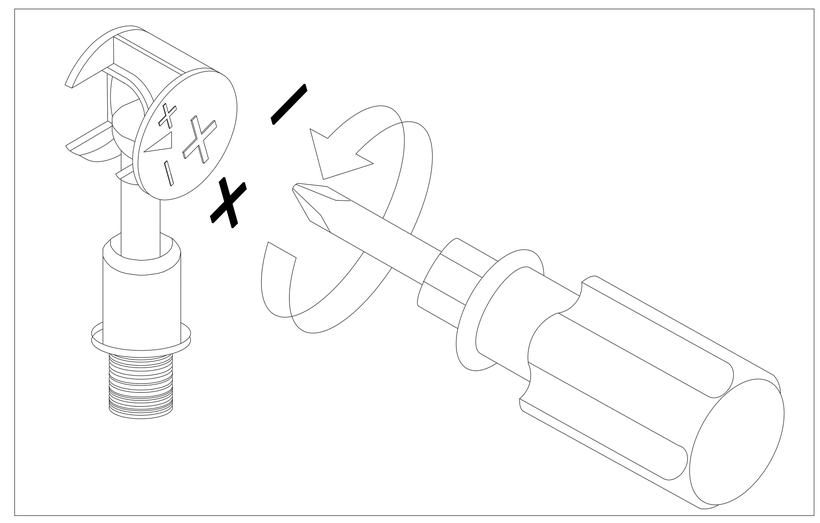

Disassemble along the direction of "-" sign

Step 1

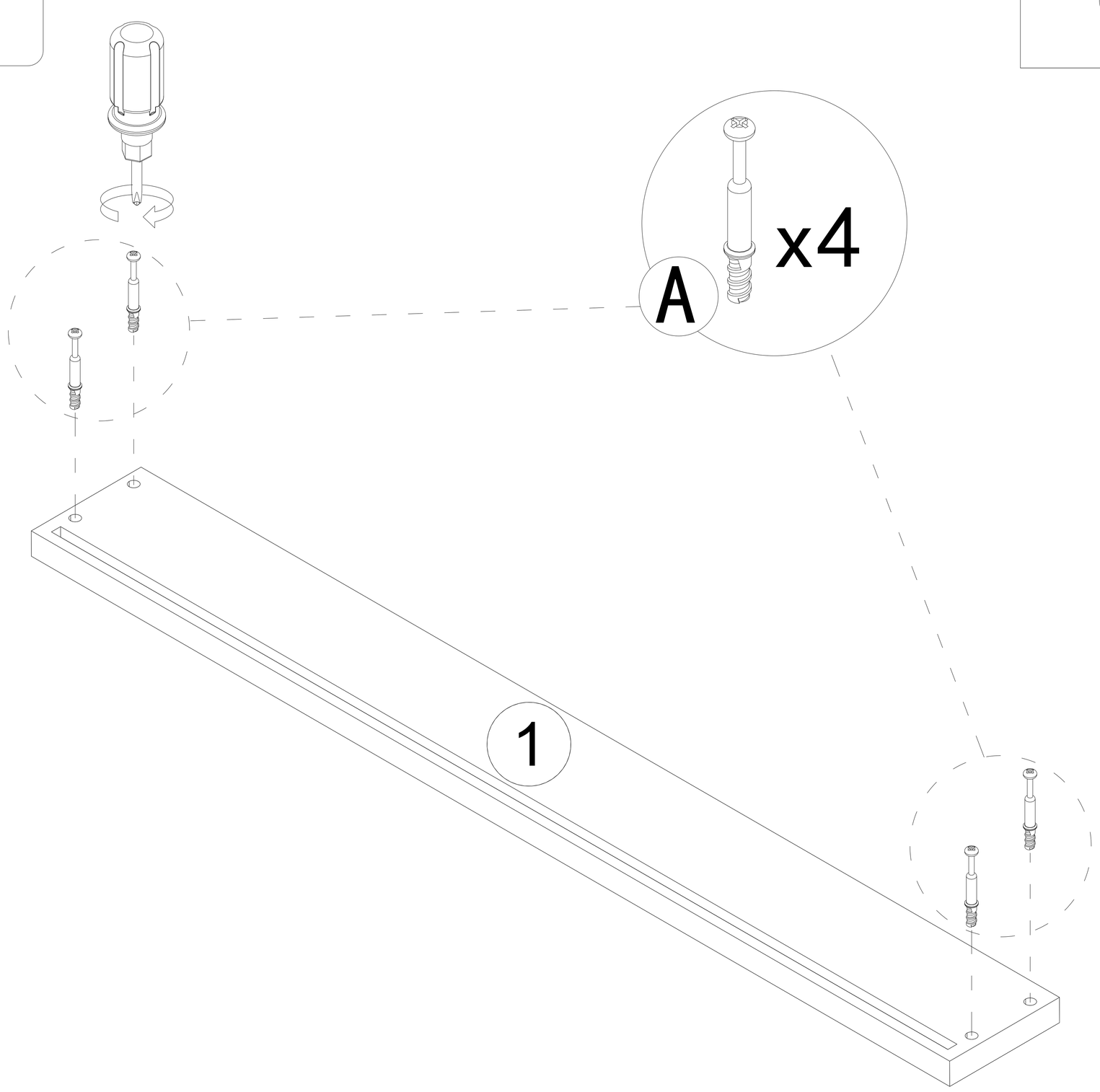

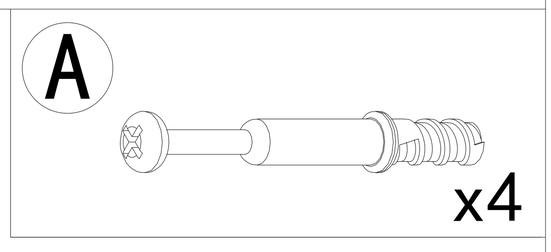

Step 2

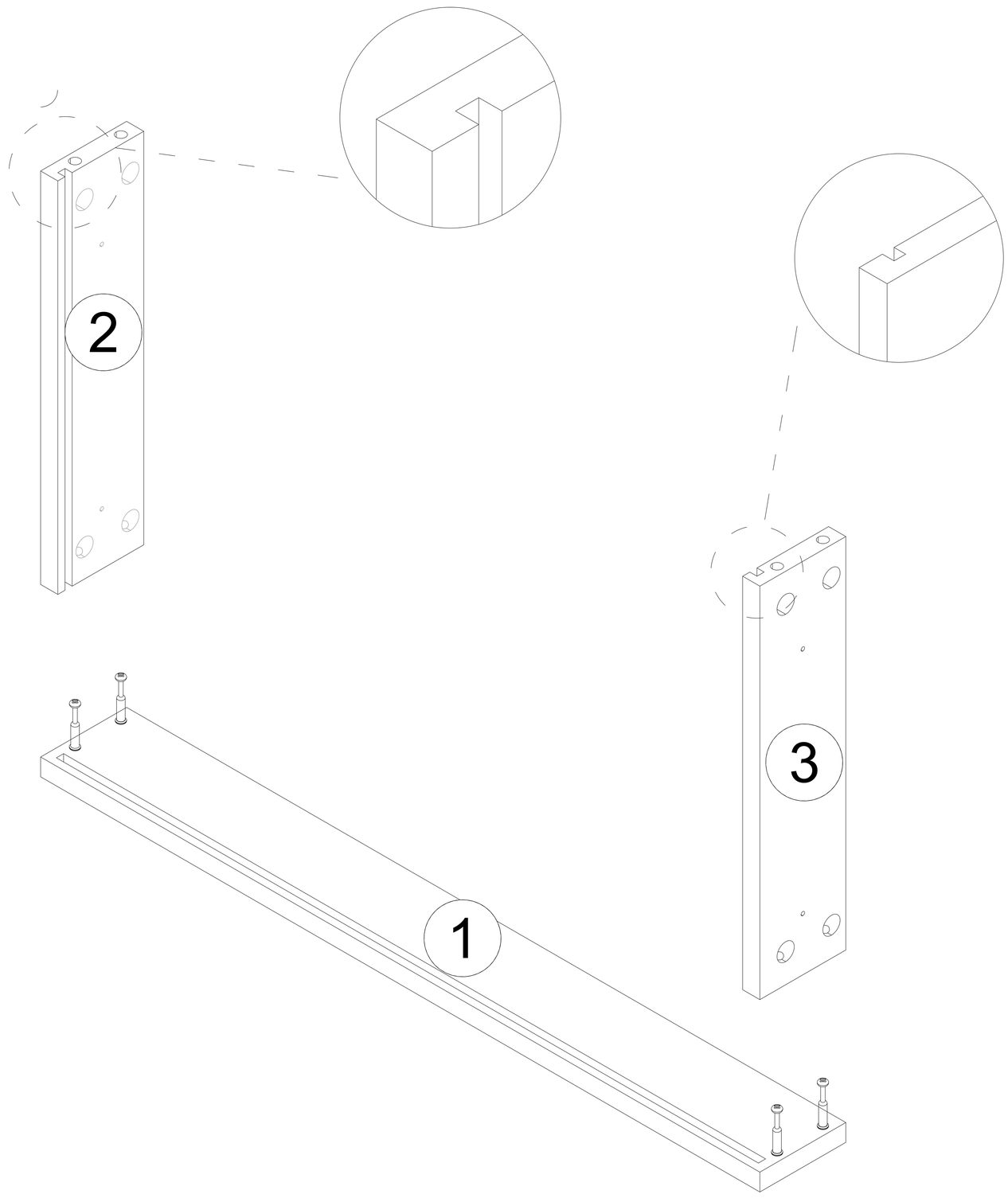

Step 3

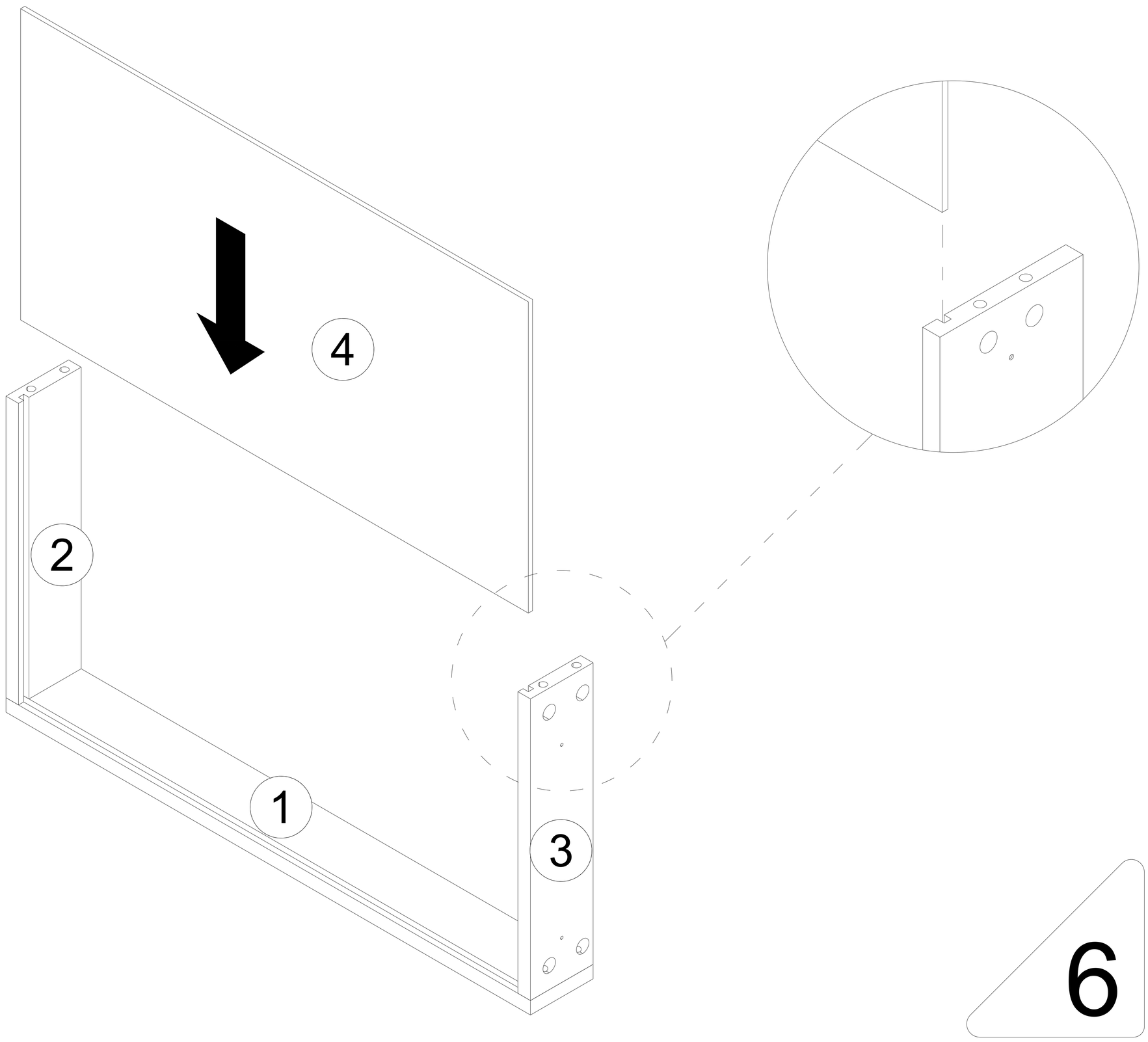

Step 4

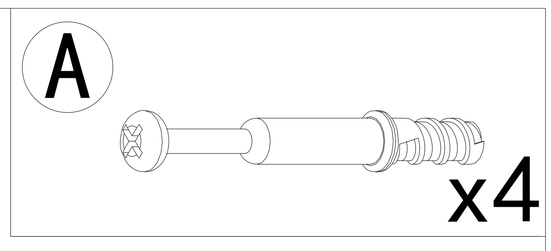

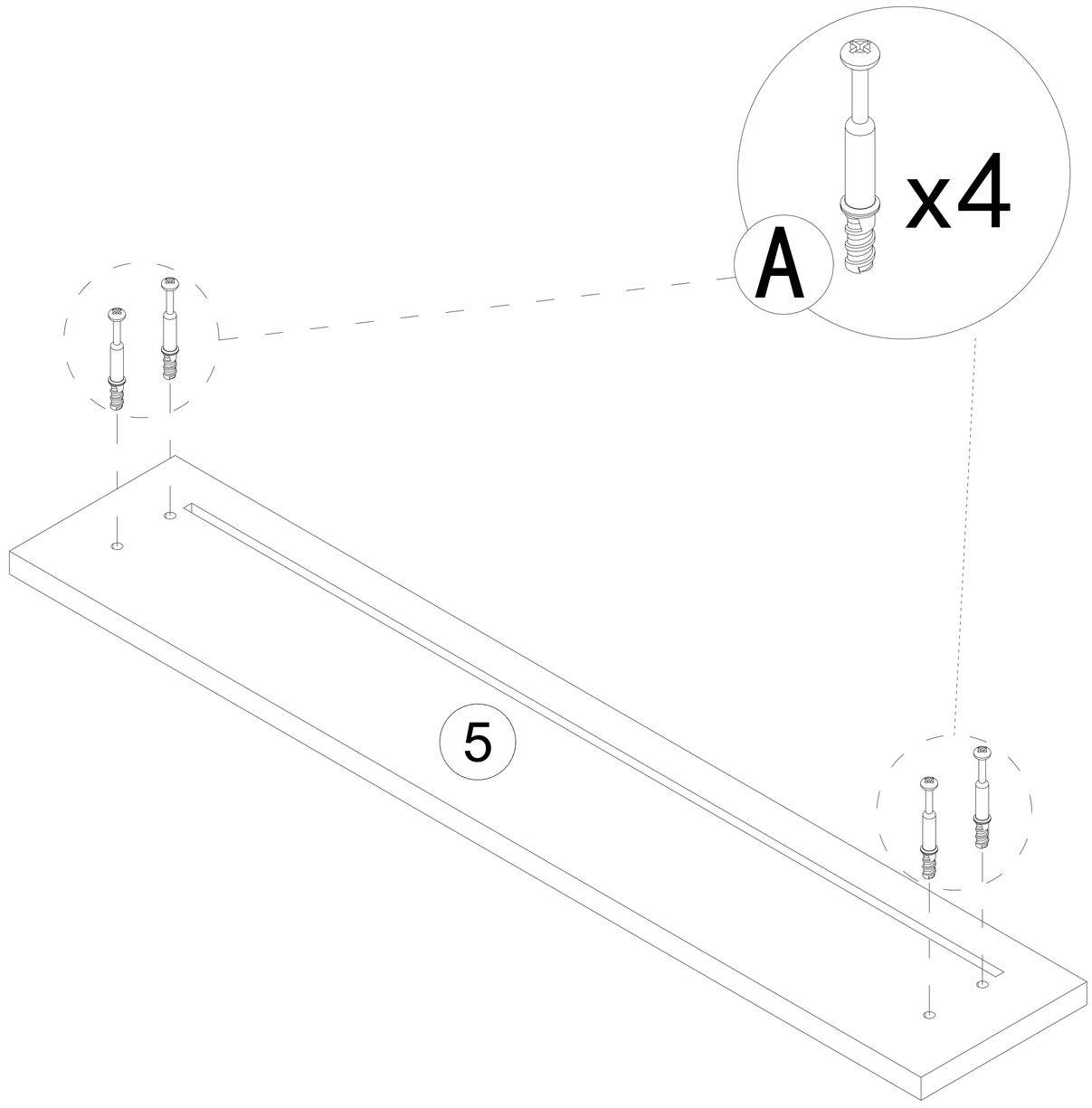

Step 5

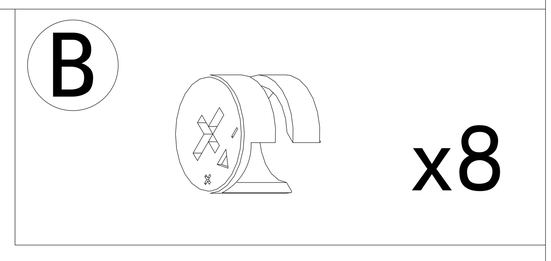

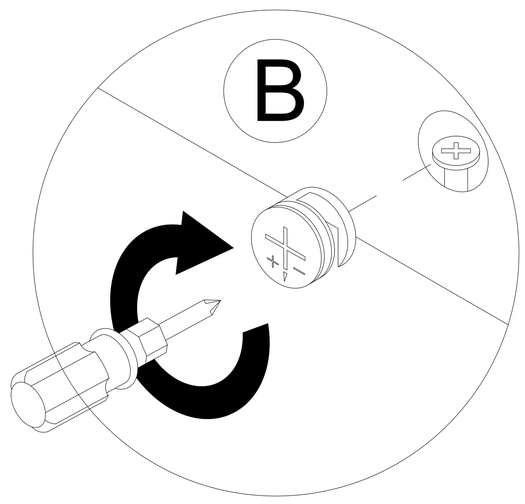

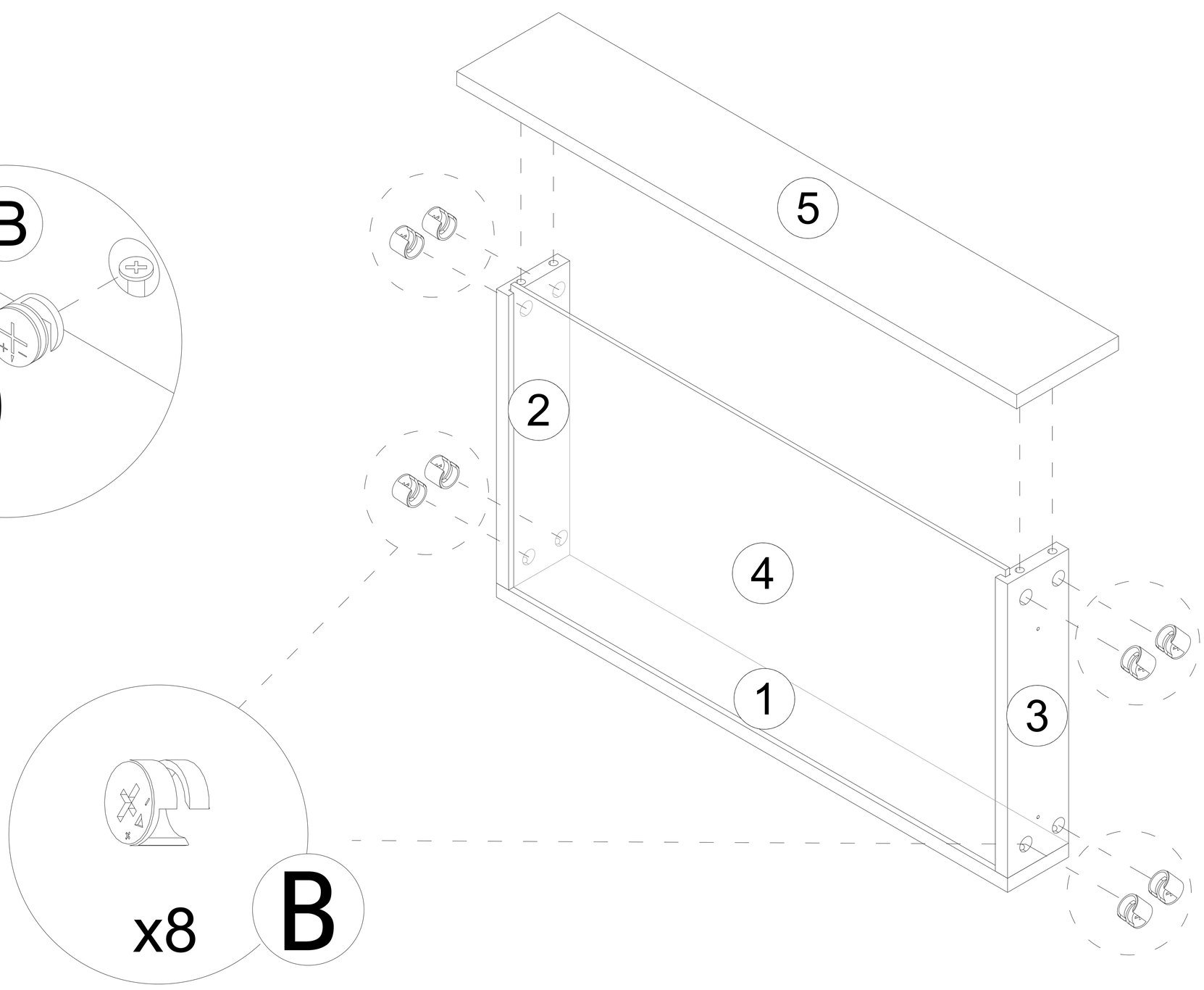

Drawer rail breakdown diagram

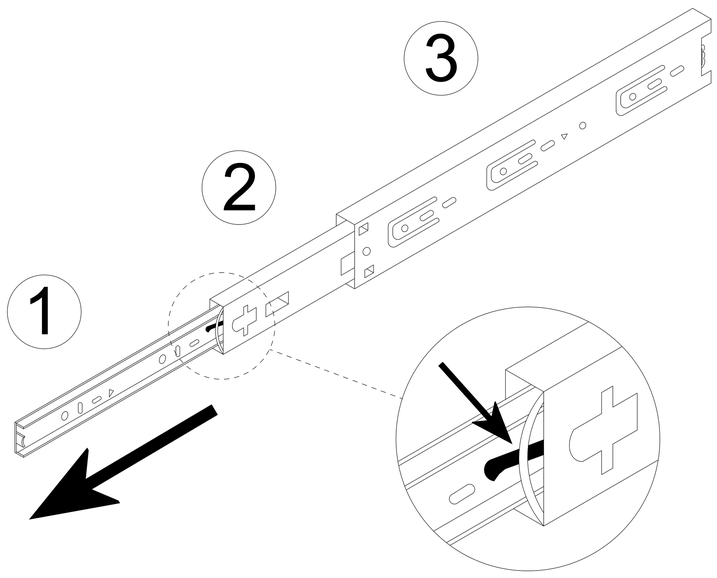

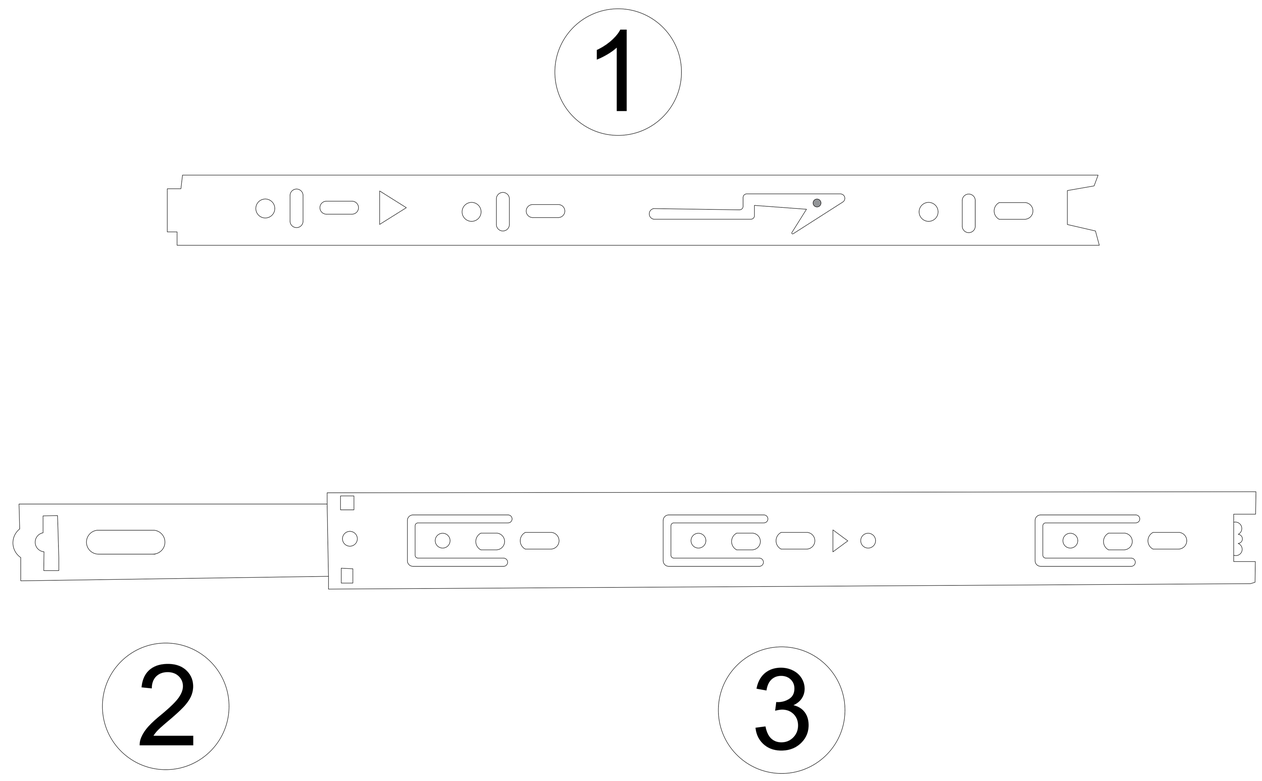

Step 1 : Pull the rails apart

Step 2 : Push the nylon buckle outward ①

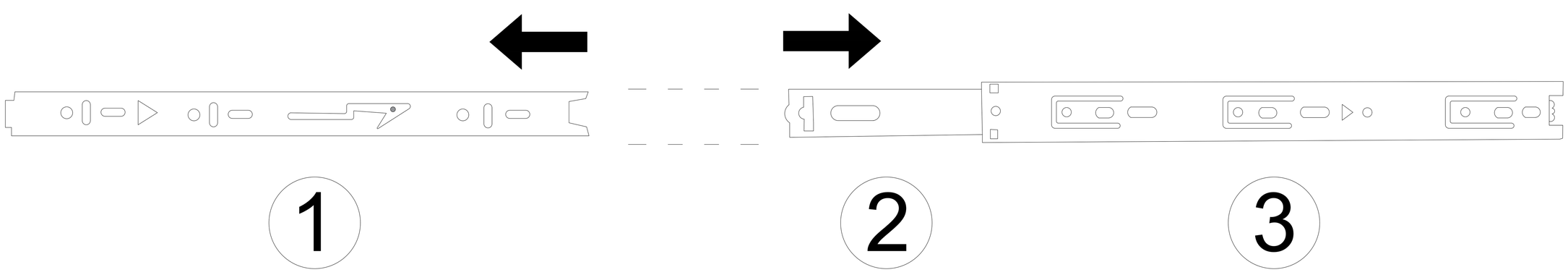

Step 6

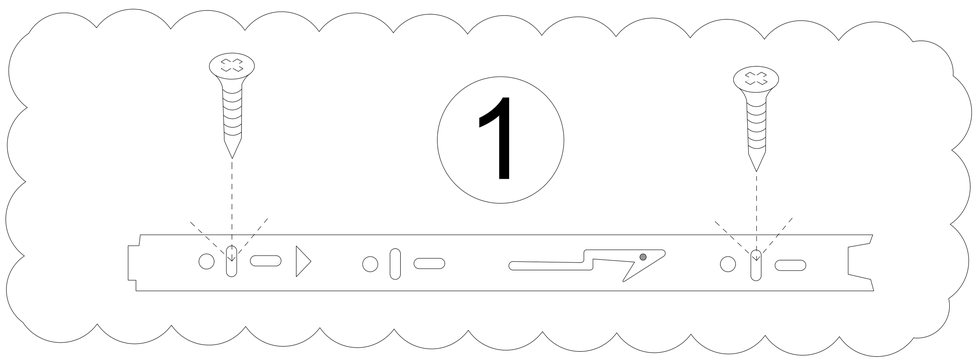

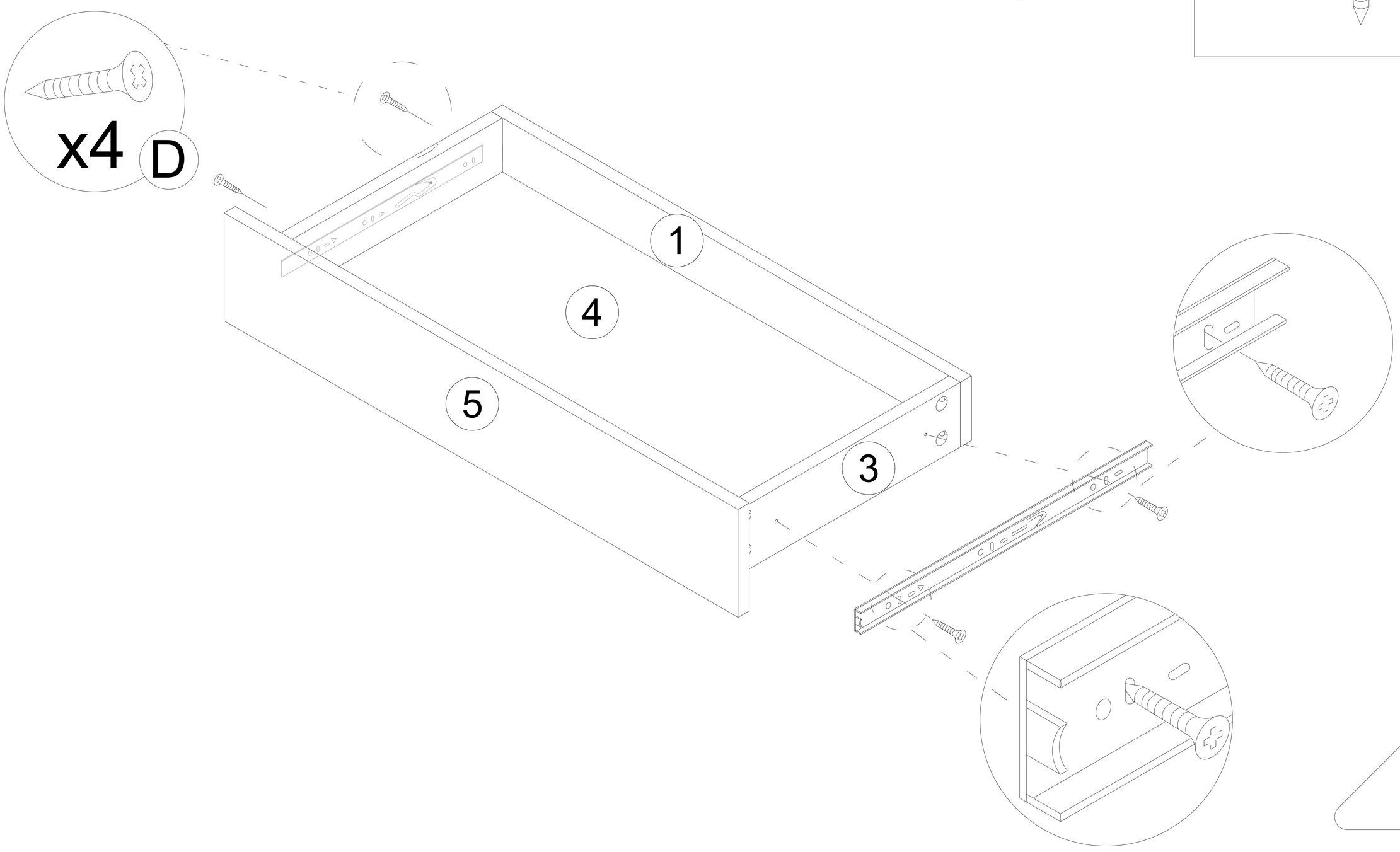

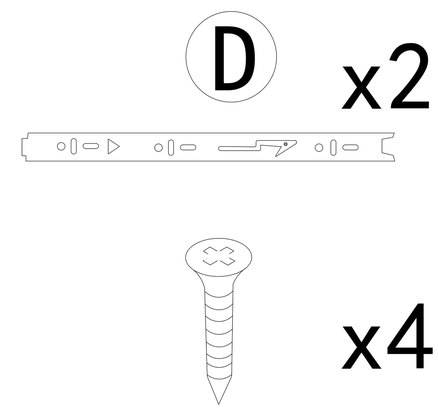

Step 7

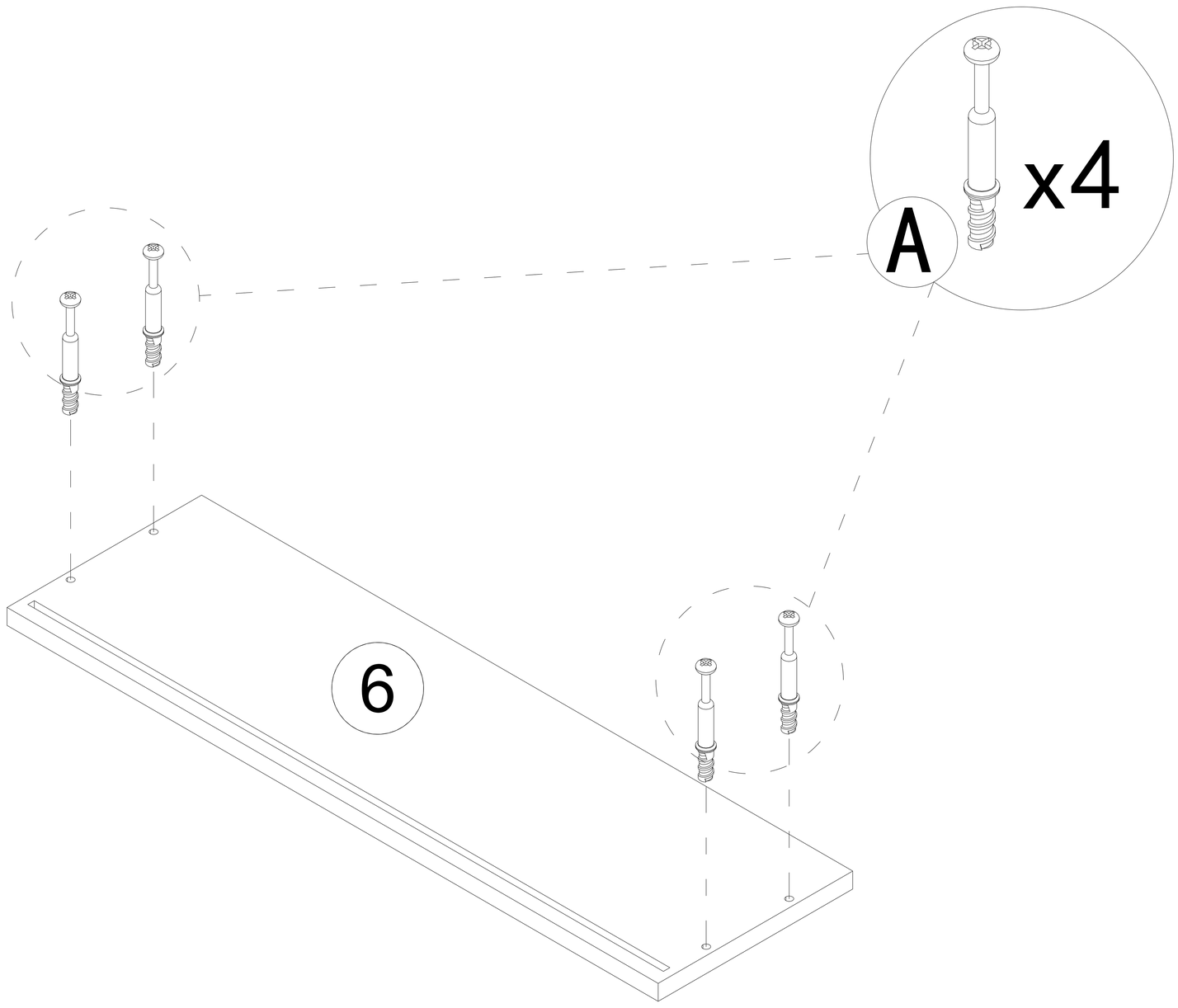

Step 8

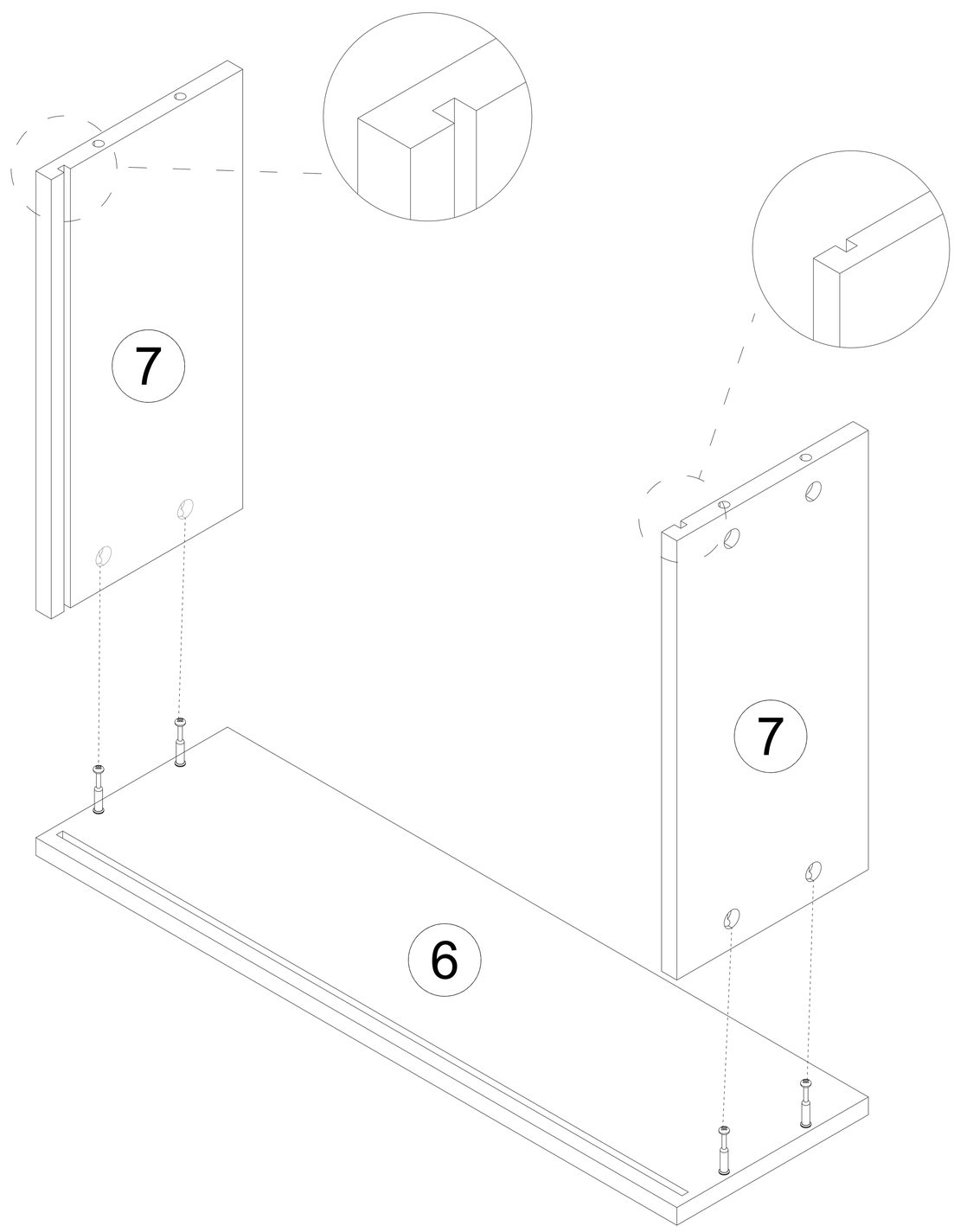

Step 9

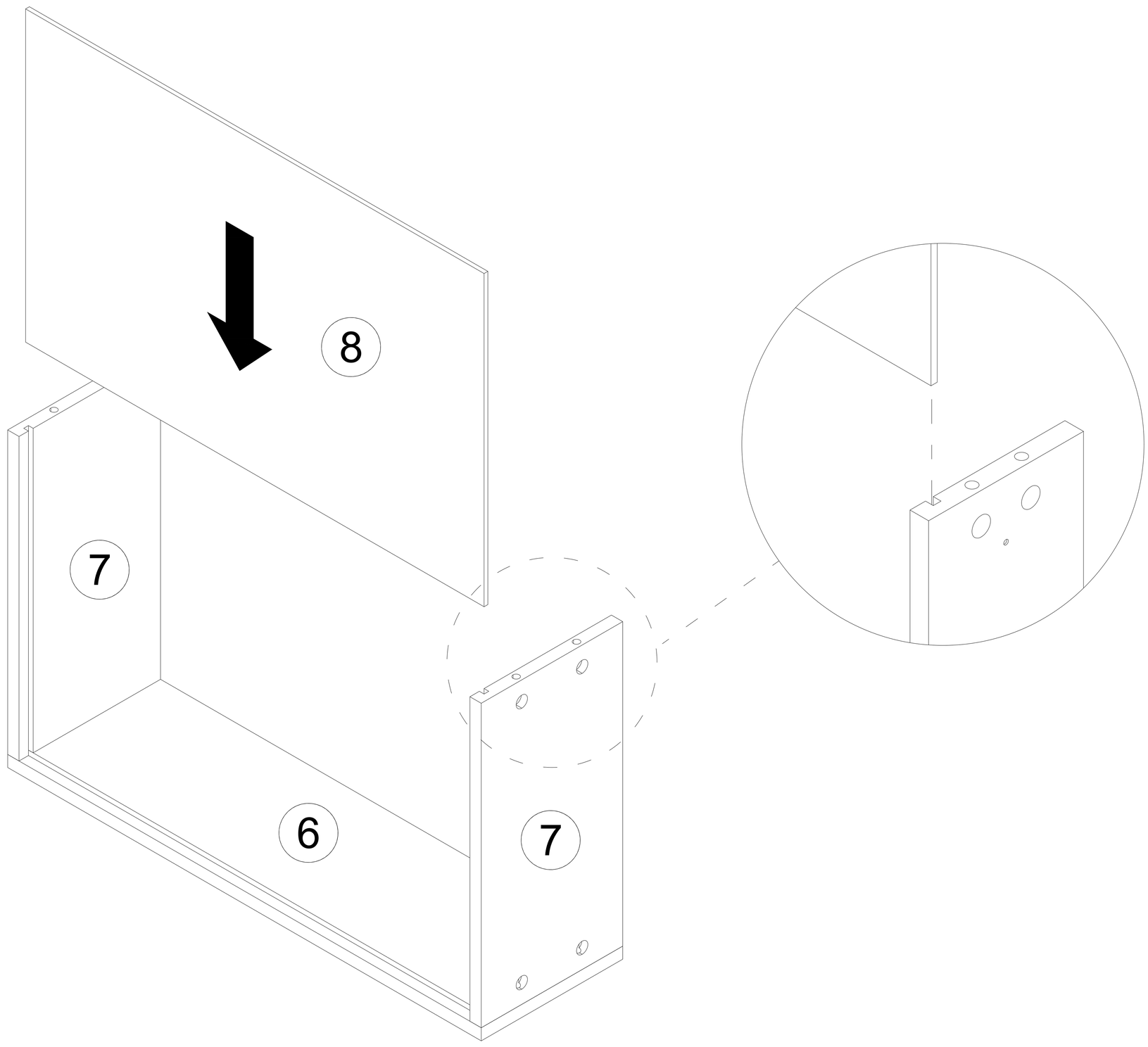

Step 10

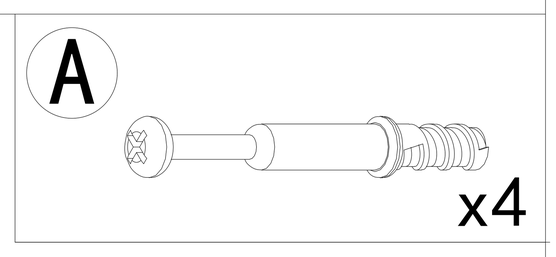

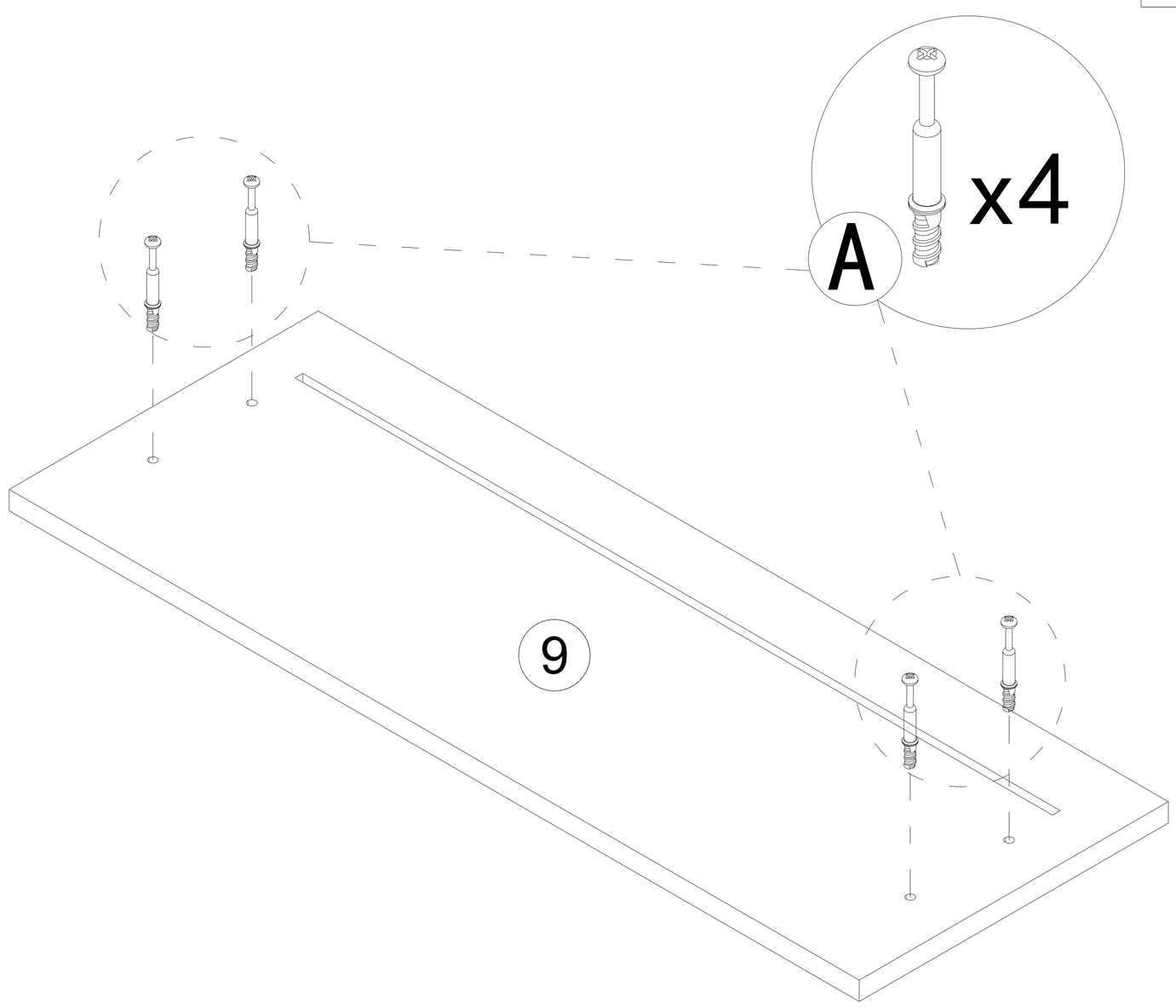

Step 11

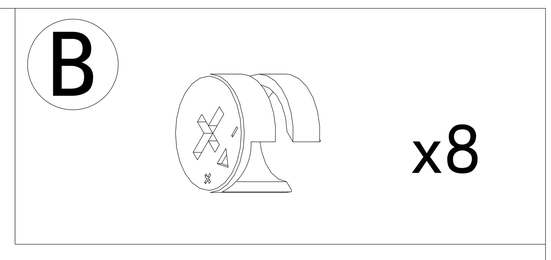

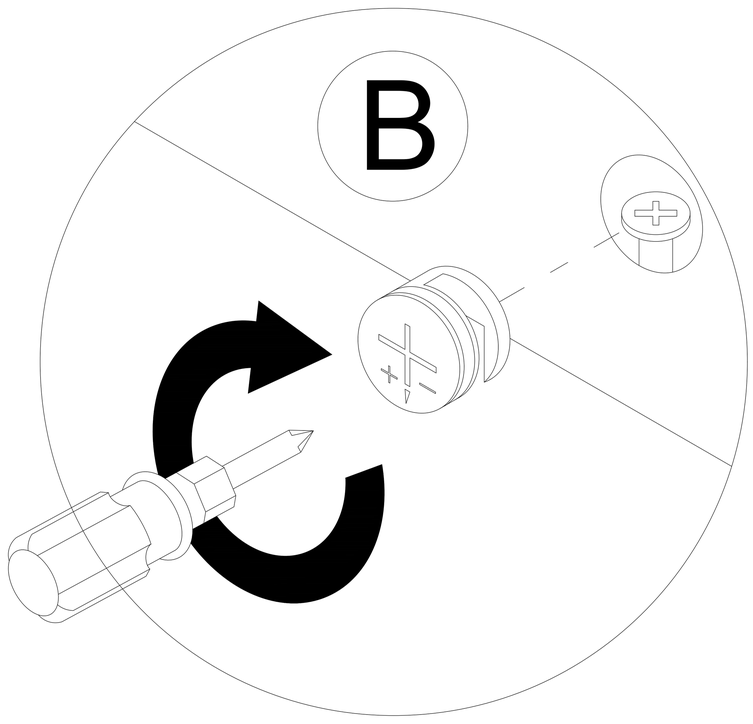

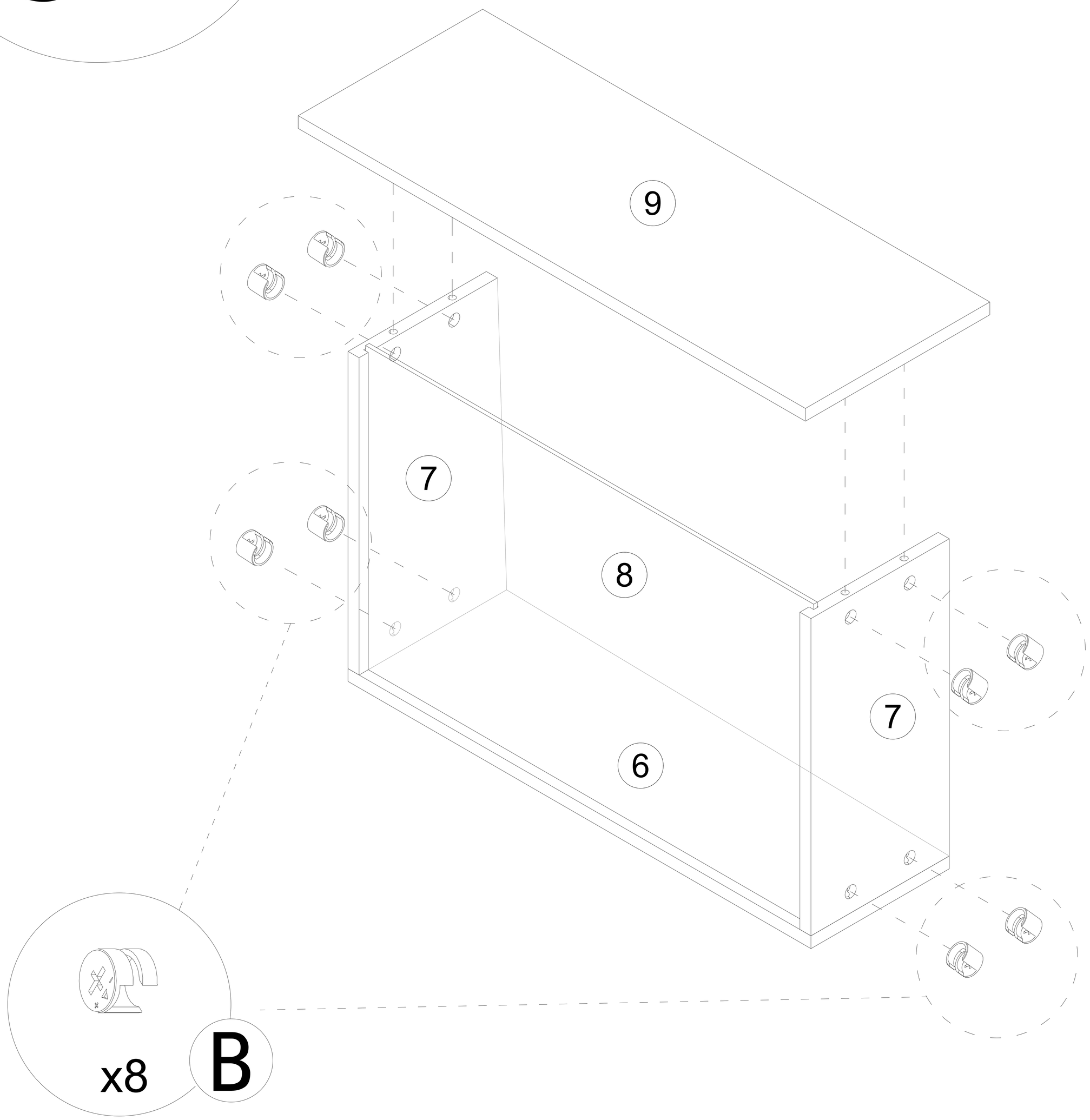

Drawer rail breakdown diagram

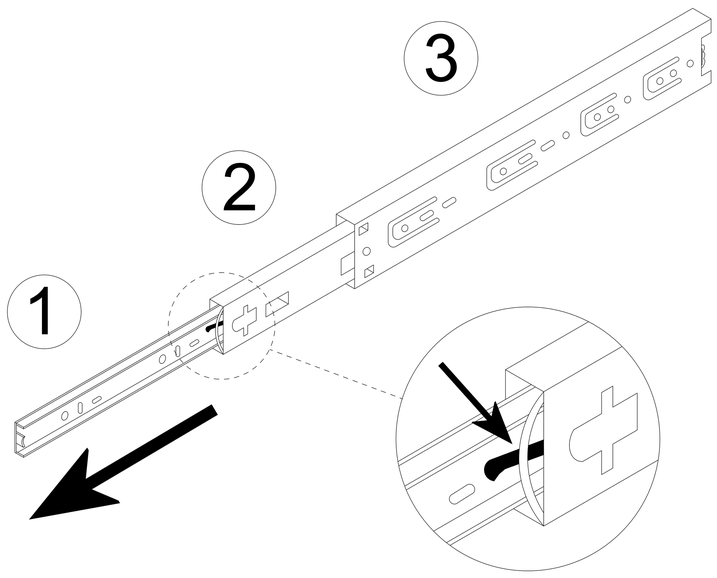

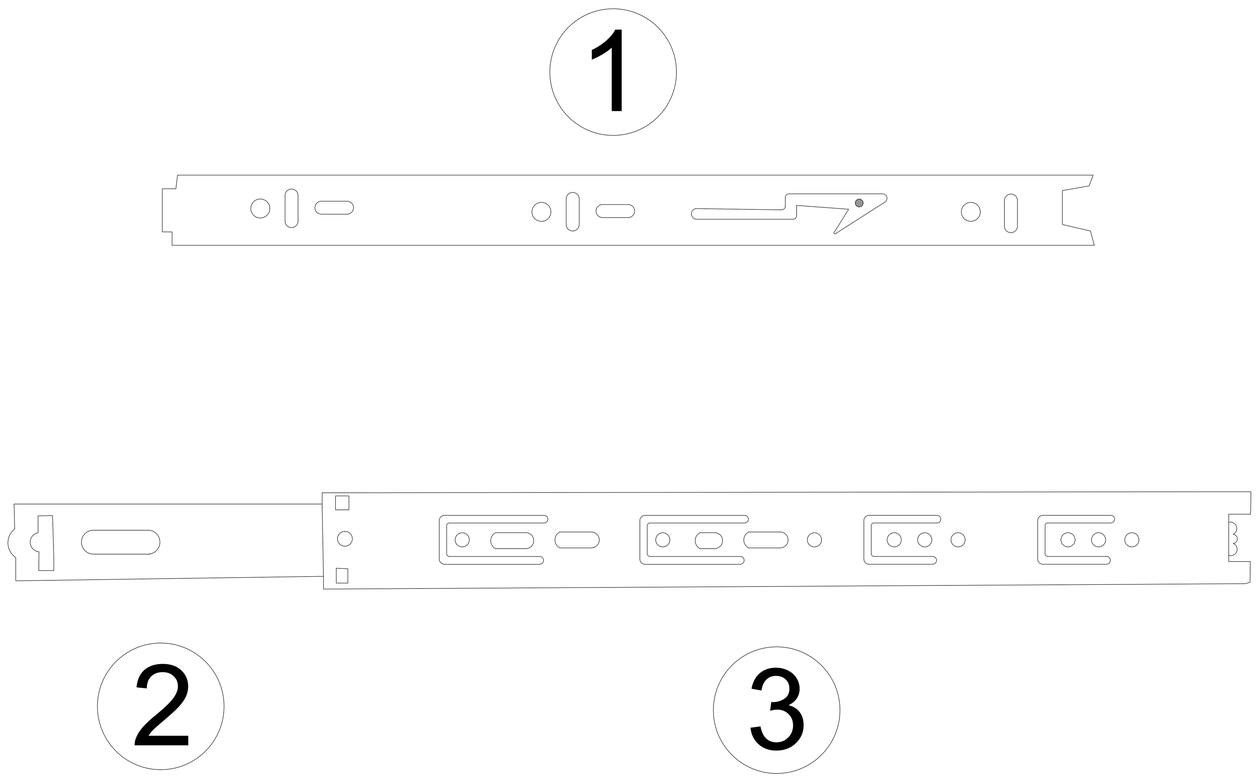

Step 1 : Pull the rails apart

Step 2 : Push the nylon buckle outward ①

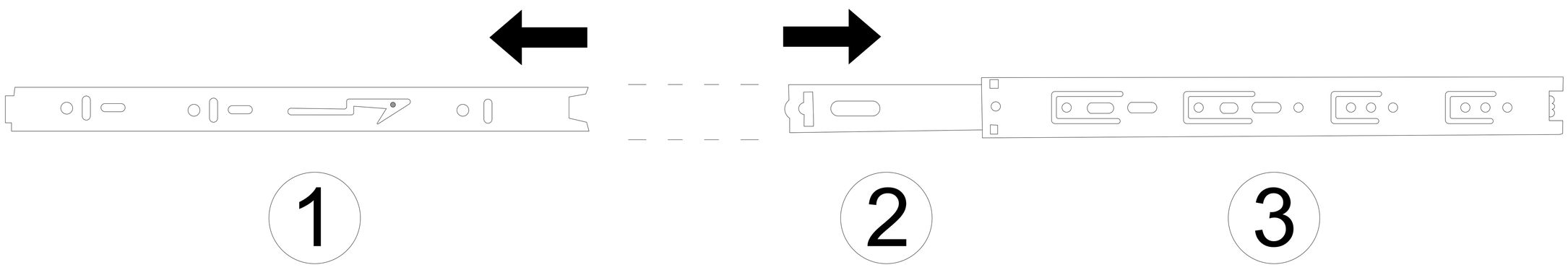

Step 12

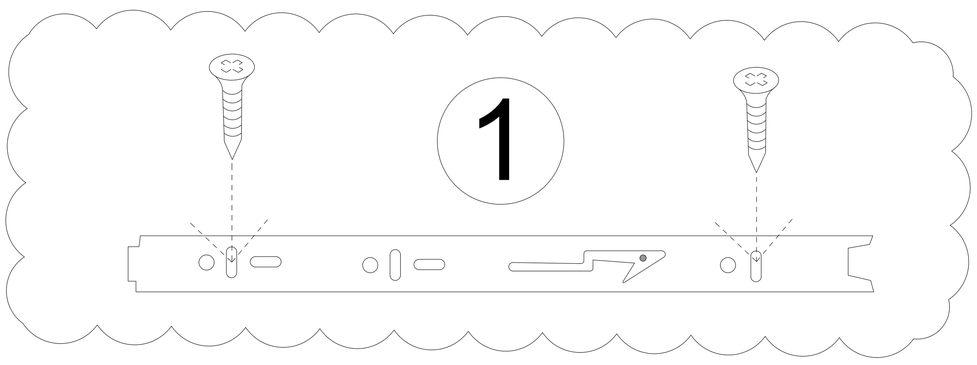

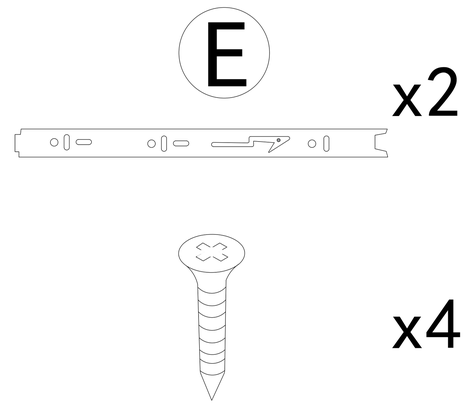

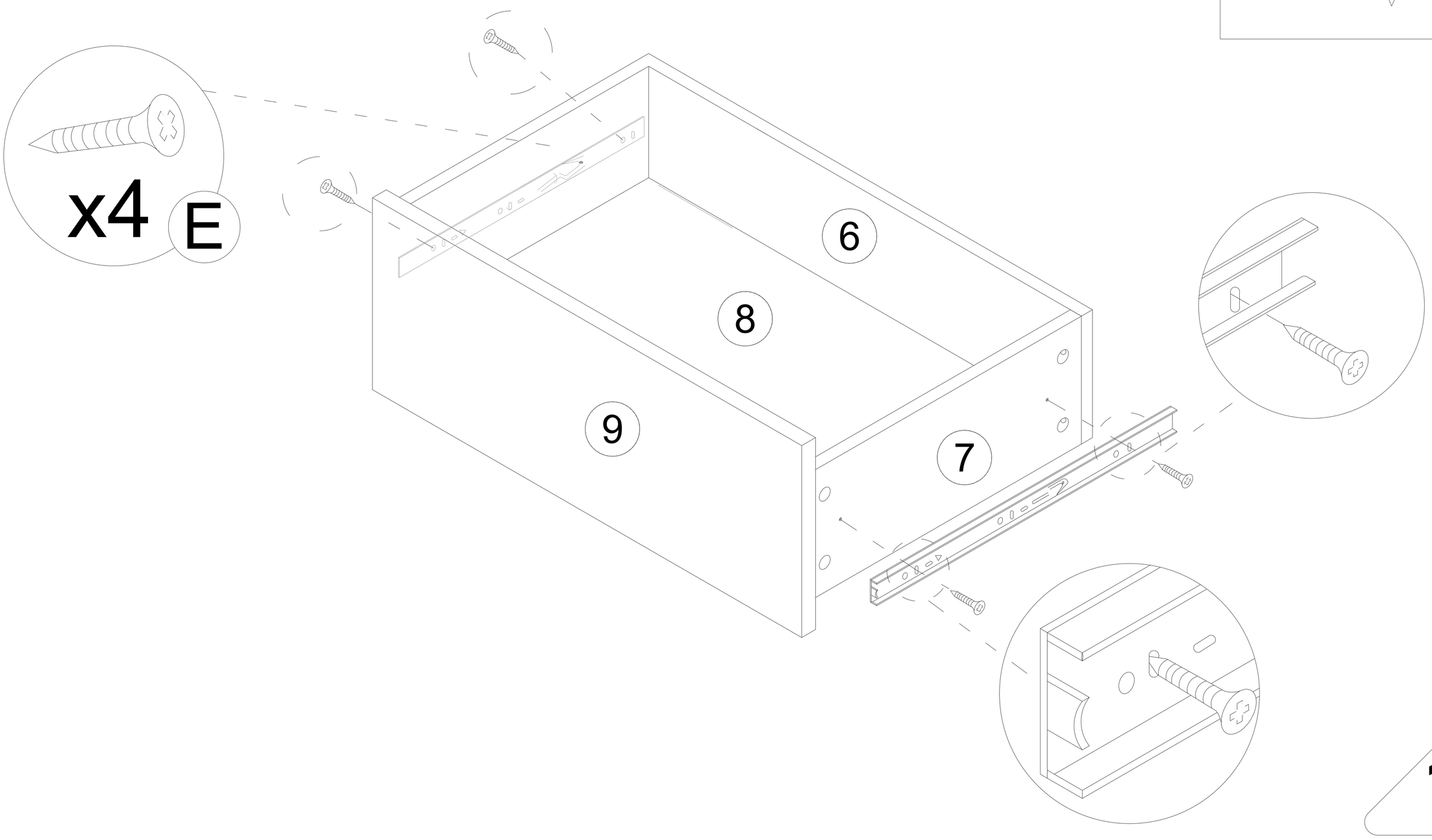

12

A		29pcs	B	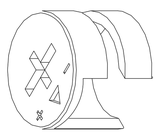	22pcs
C	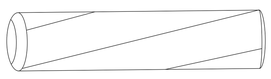	8pcs	E	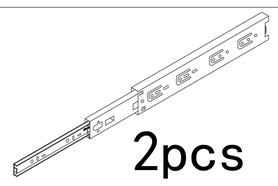 2pcs	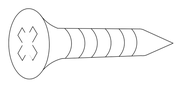 4pcs
G		8pcs			

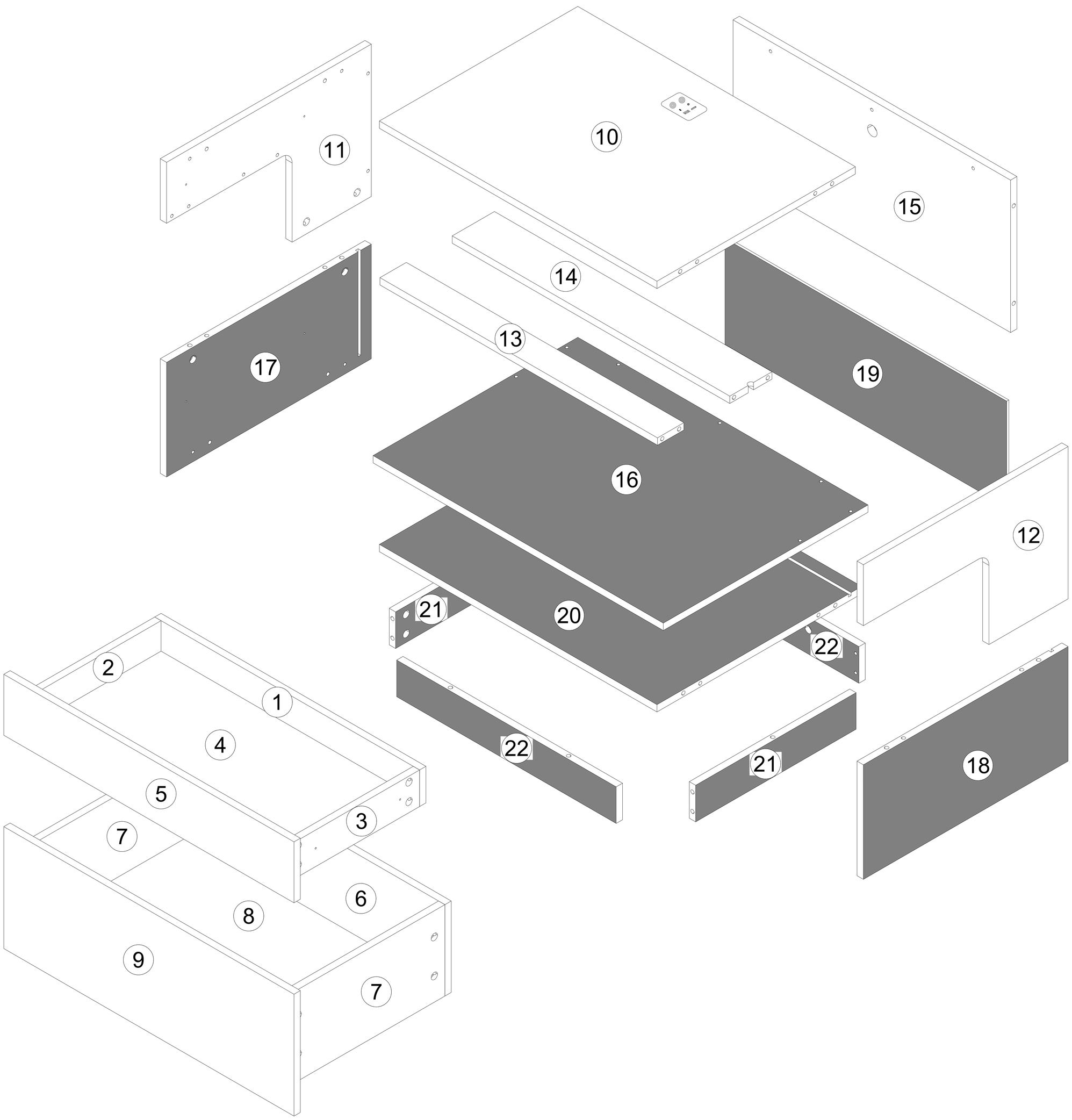

Step 13

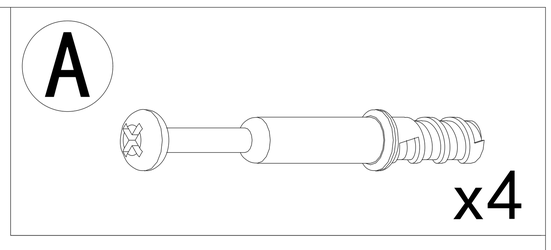

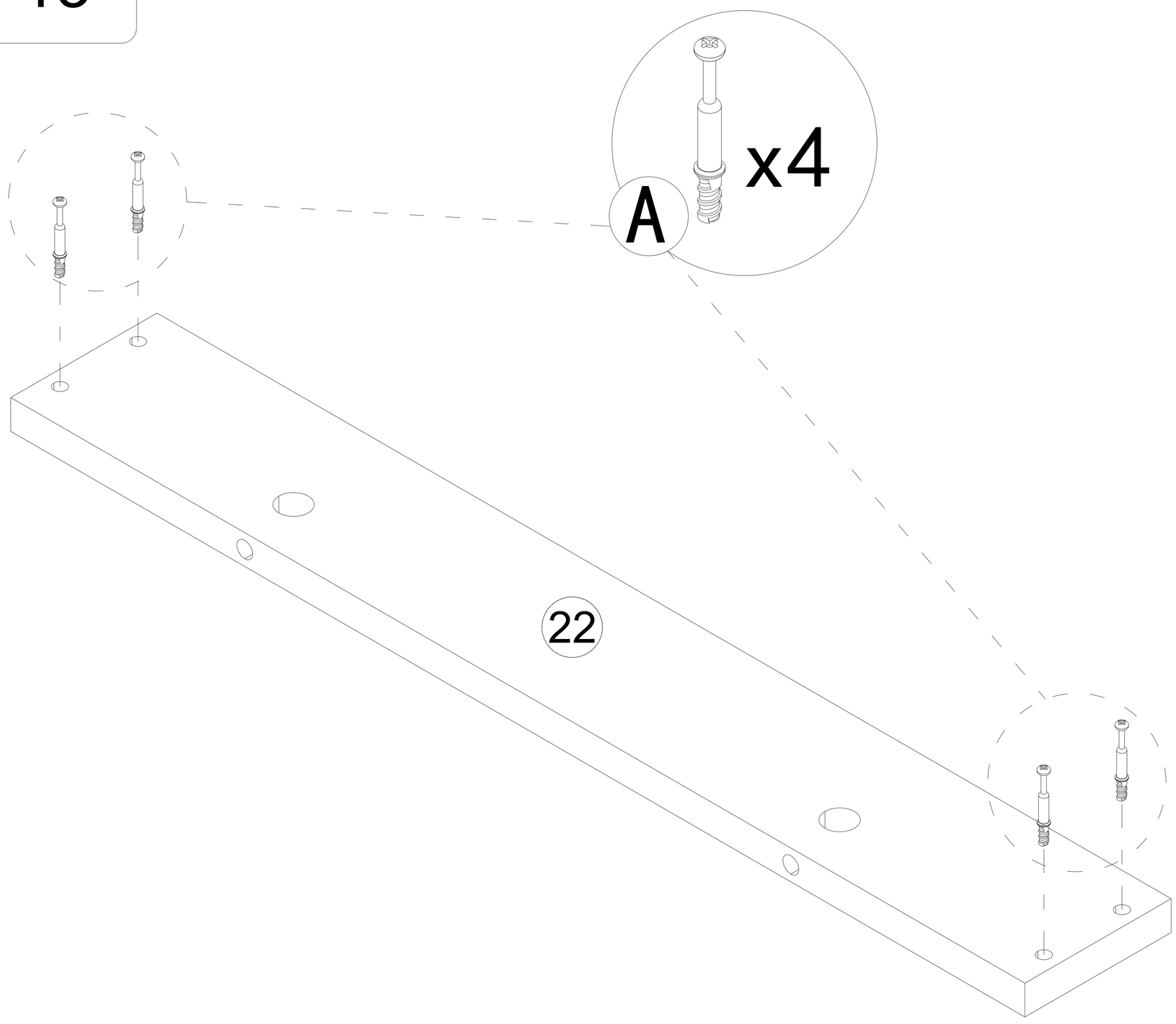

Step 14

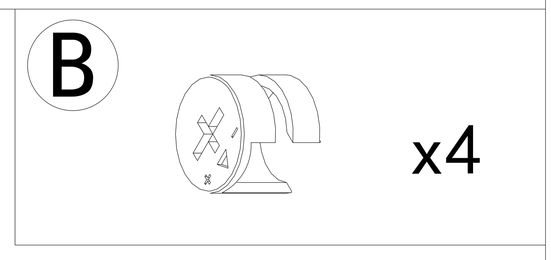

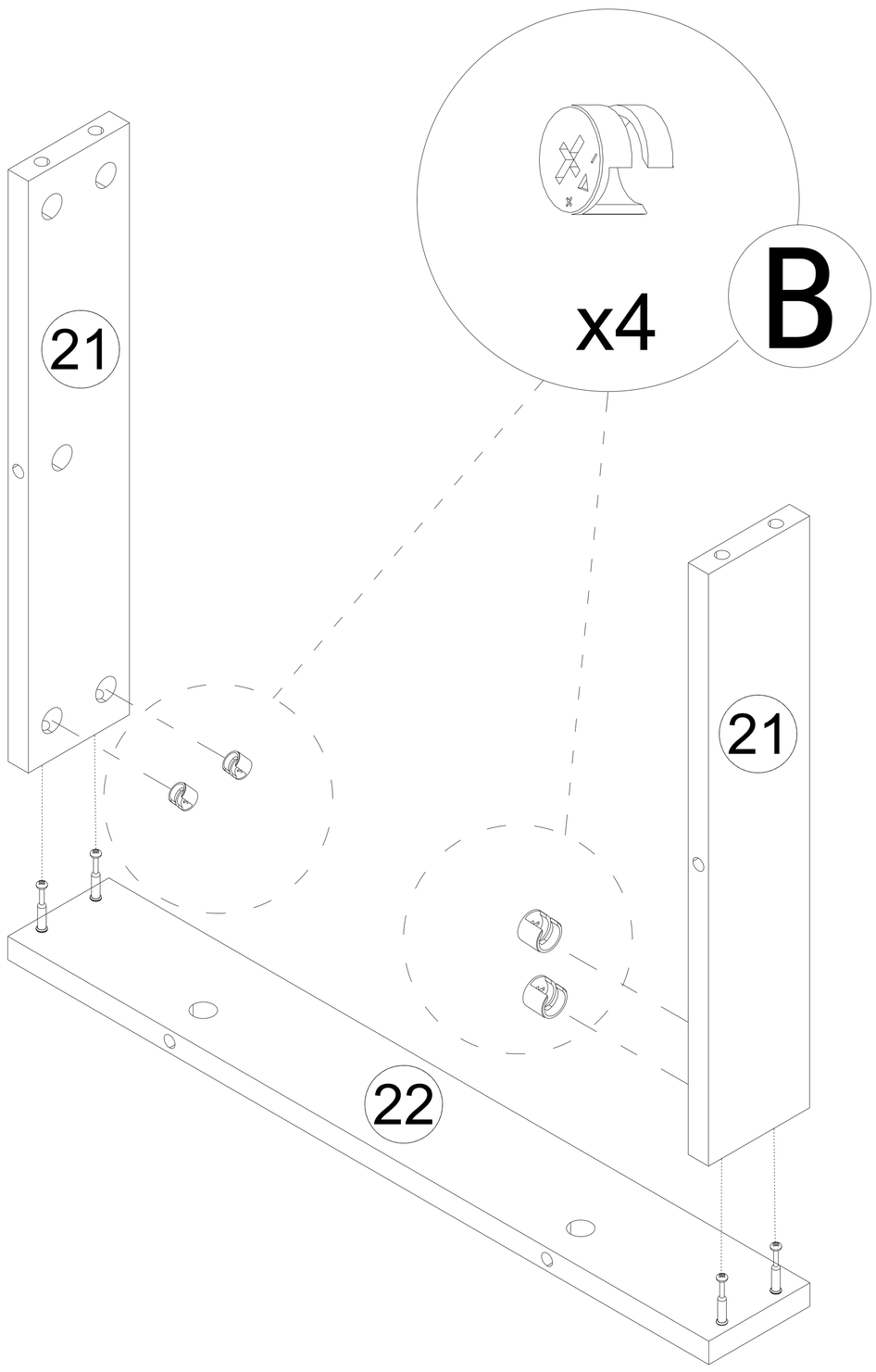

Step 15

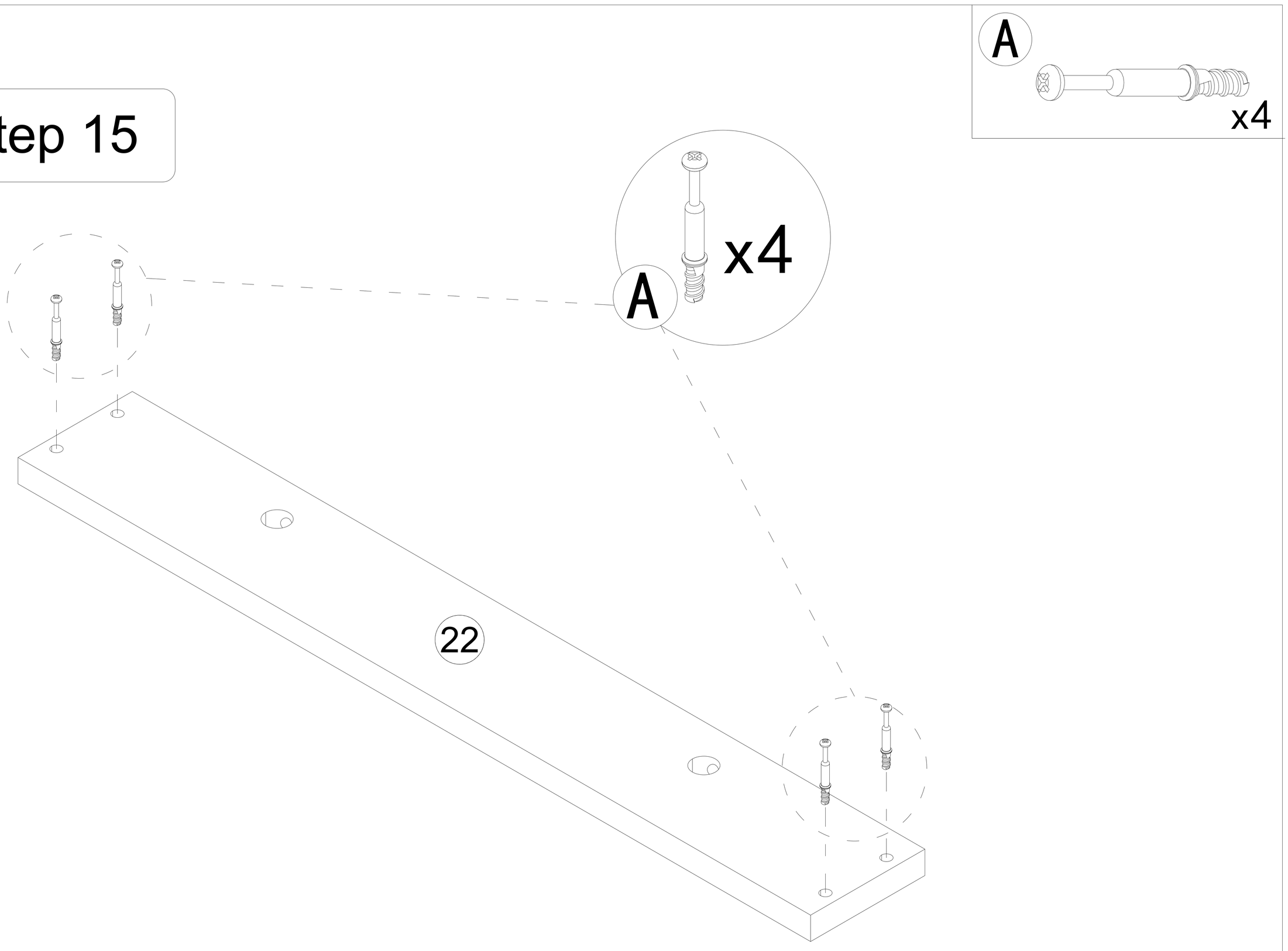

Step 16

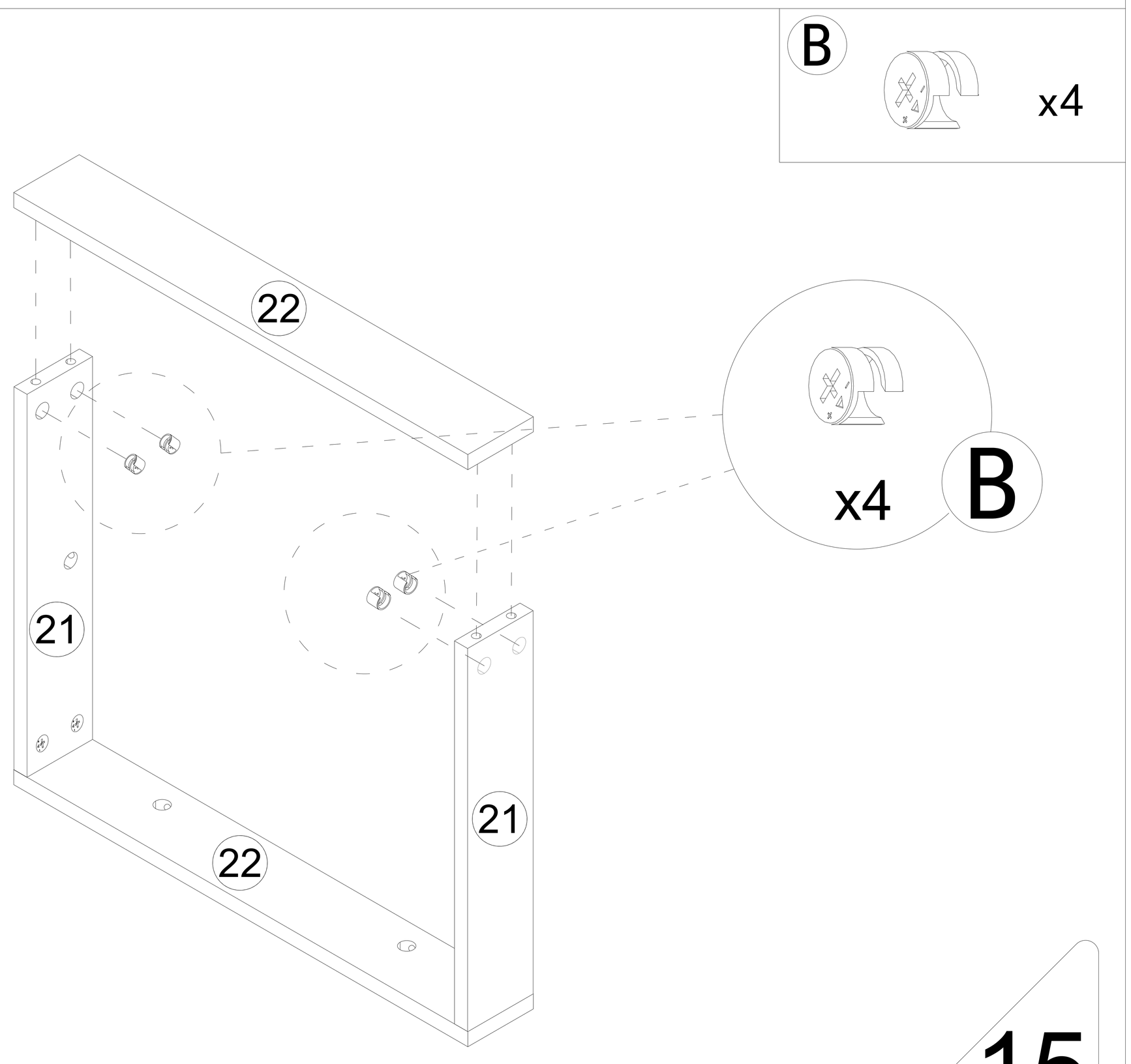

Step 17

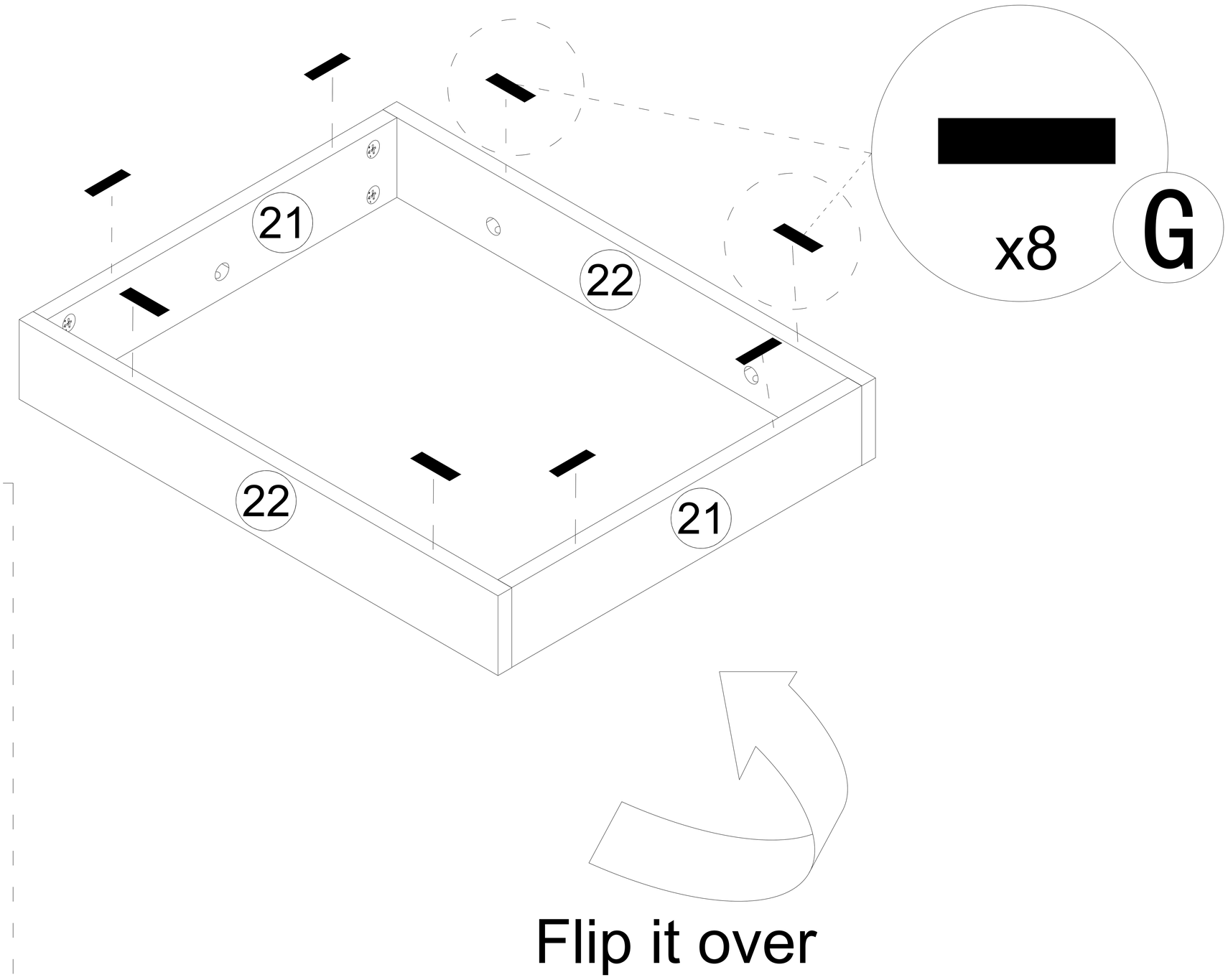

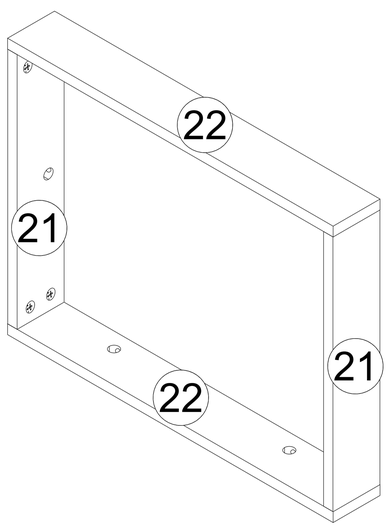

Step 18

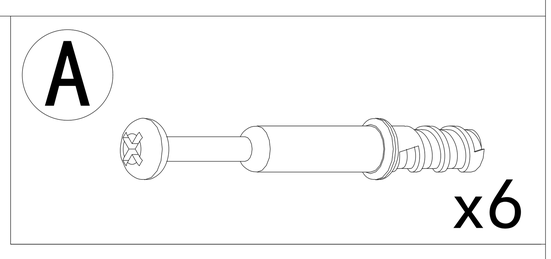

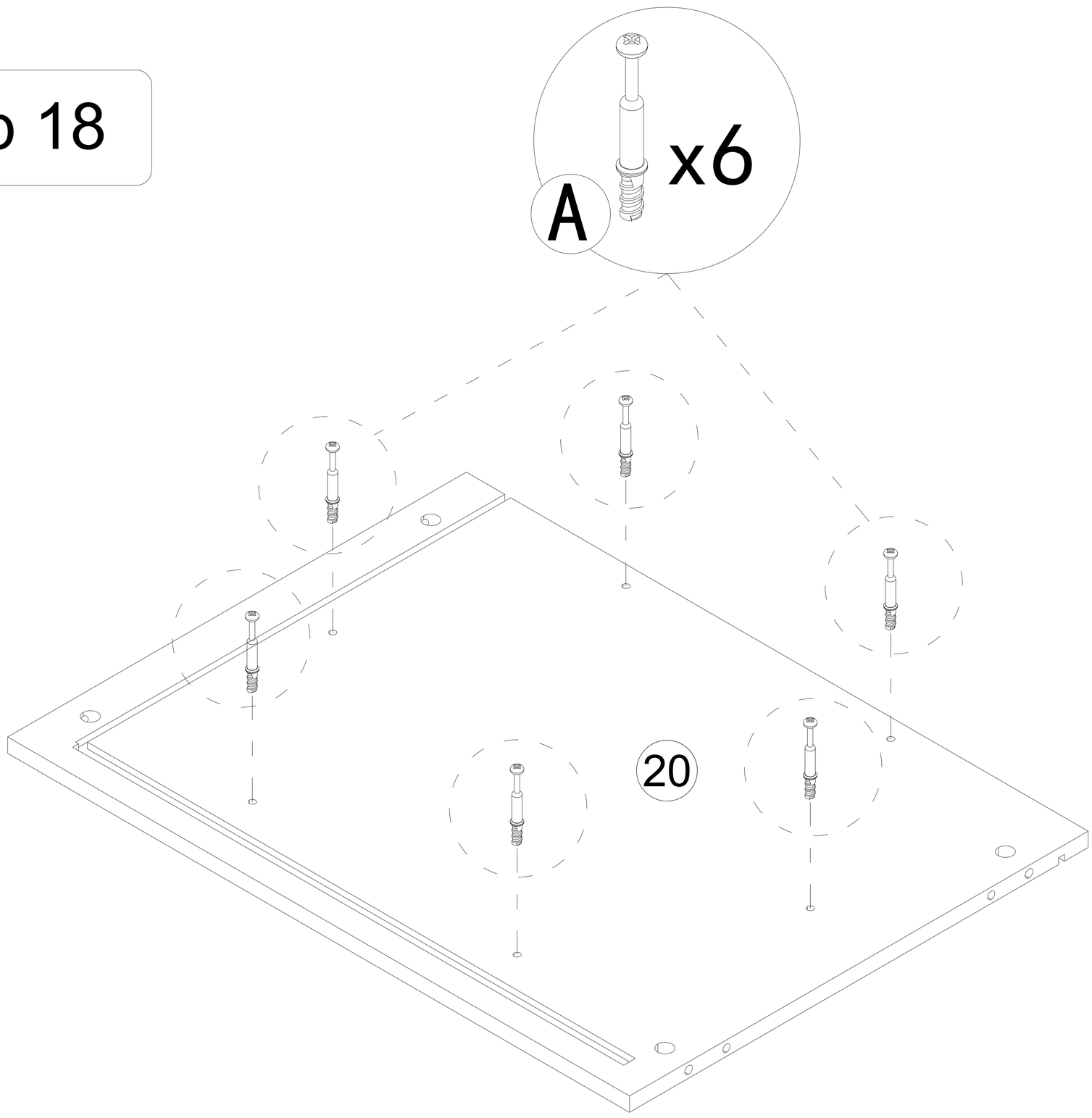

B

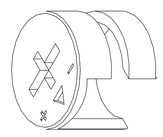

x6

Step 19

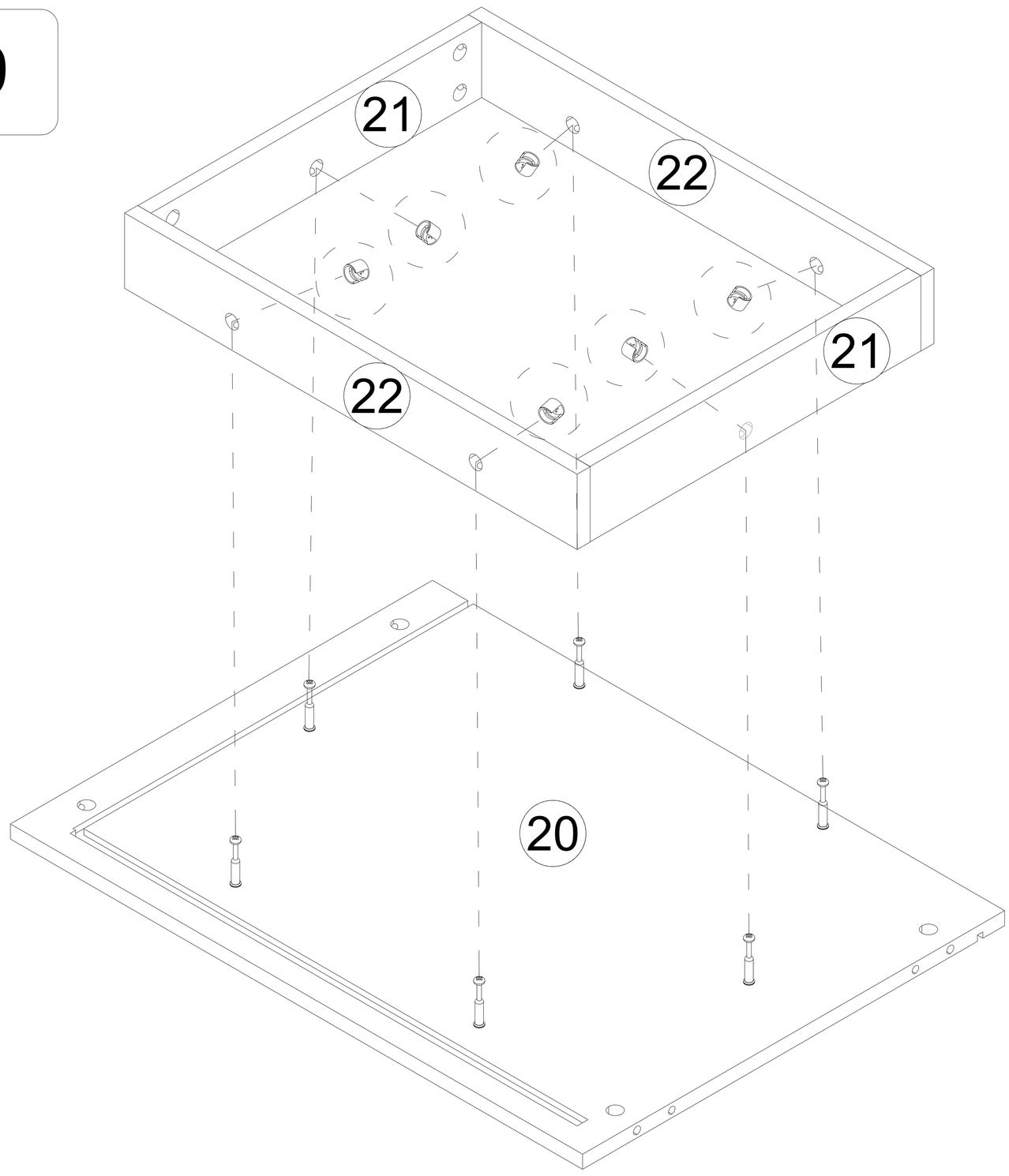

Step 20

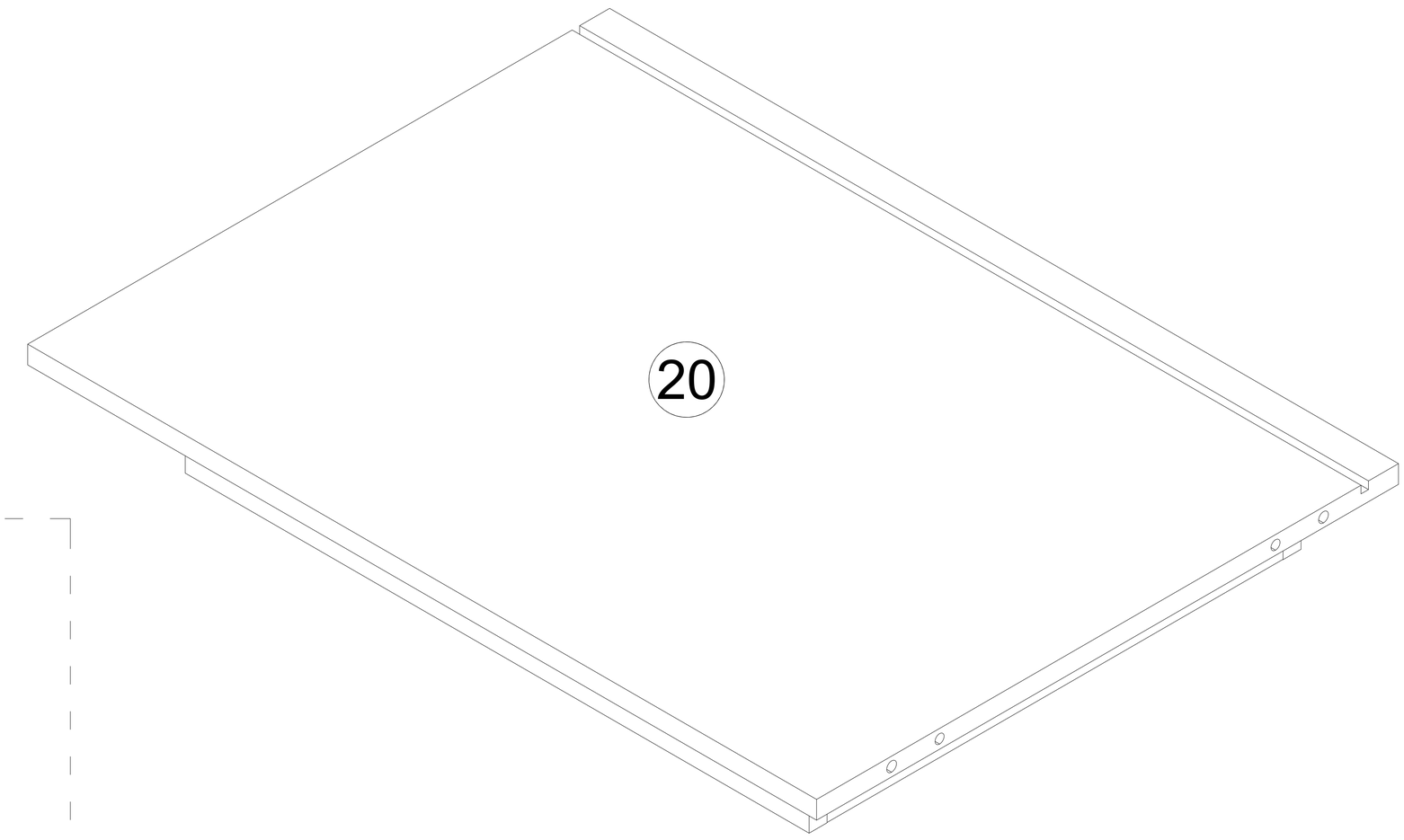

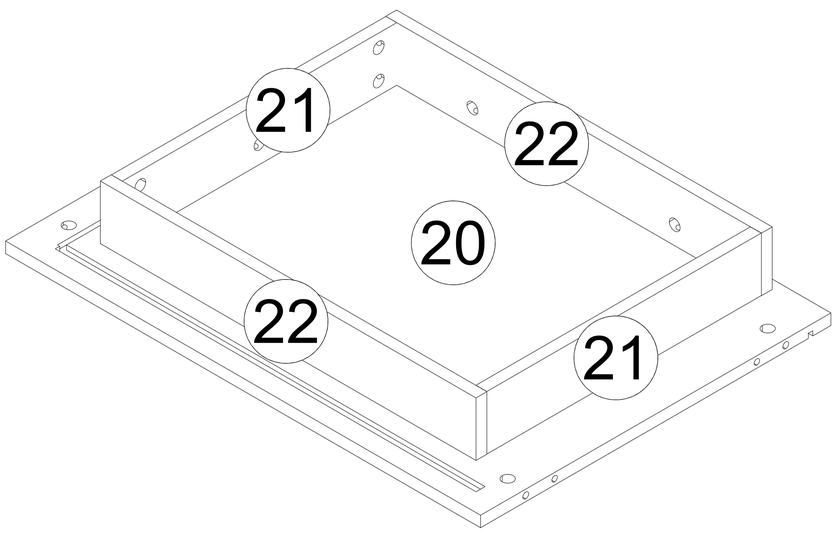

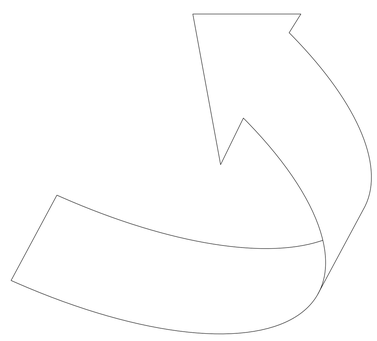

Flip it over

Step 21

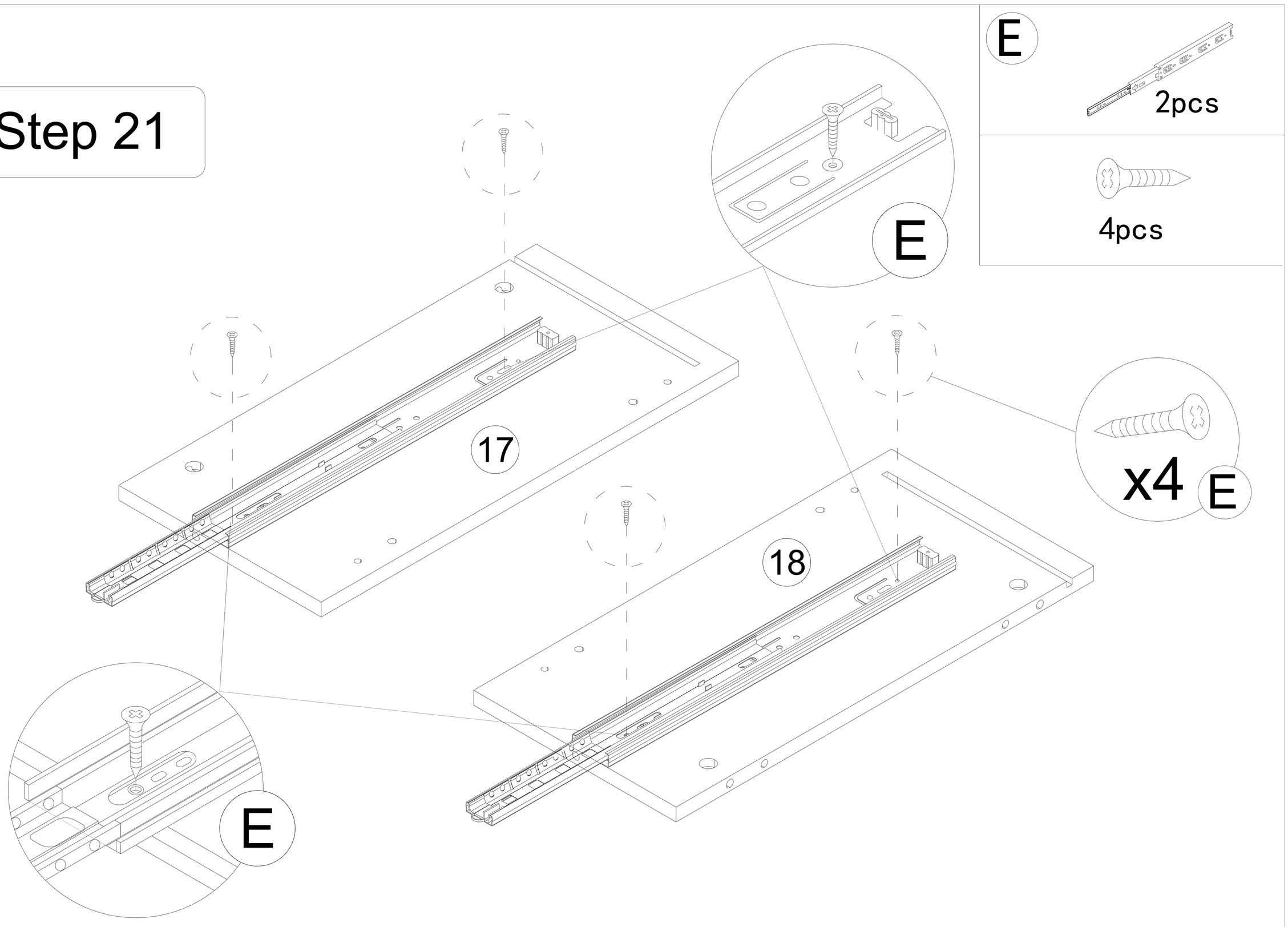

Step22

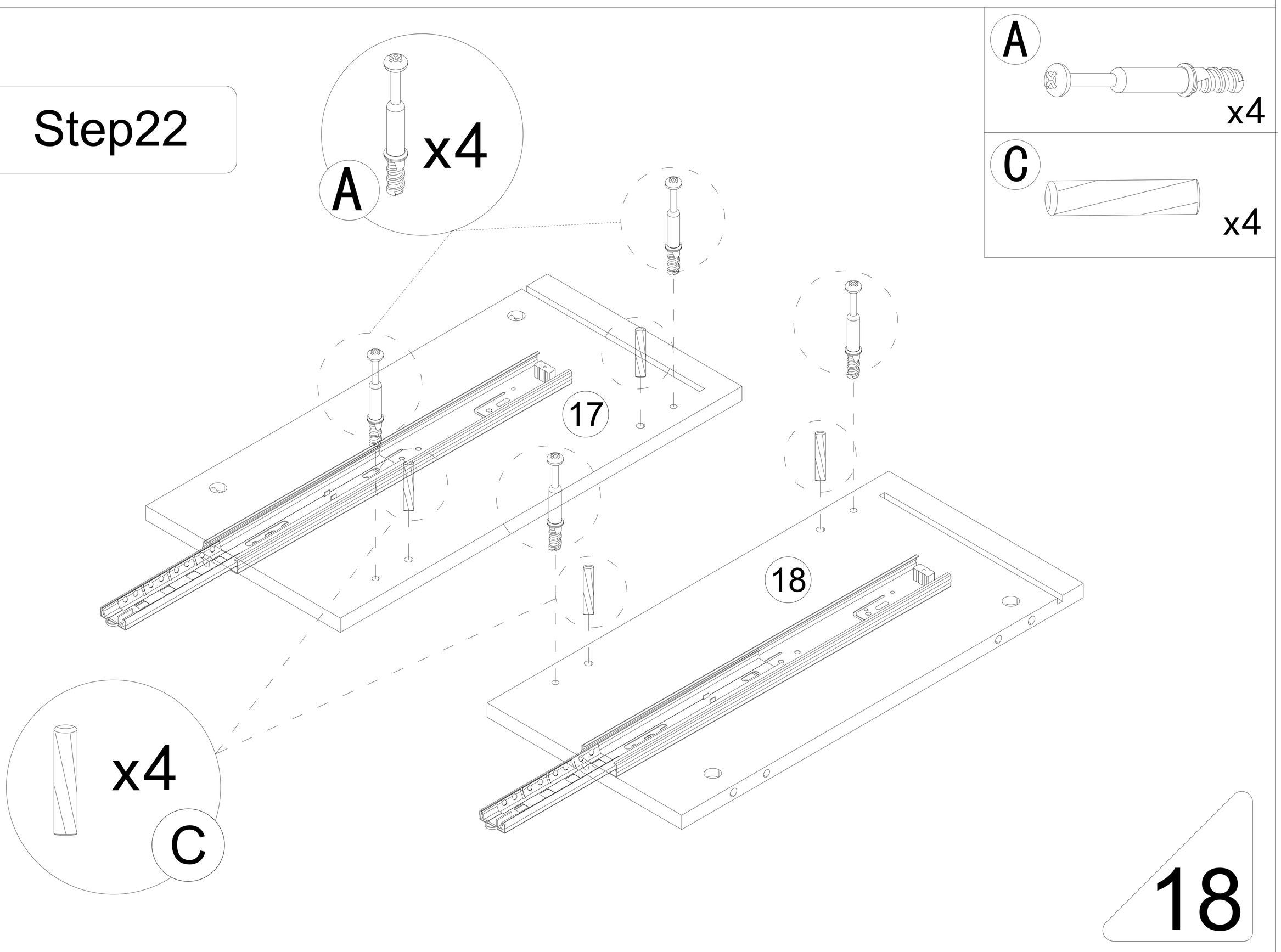

B

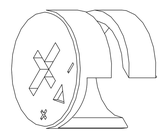

x4

Step 23

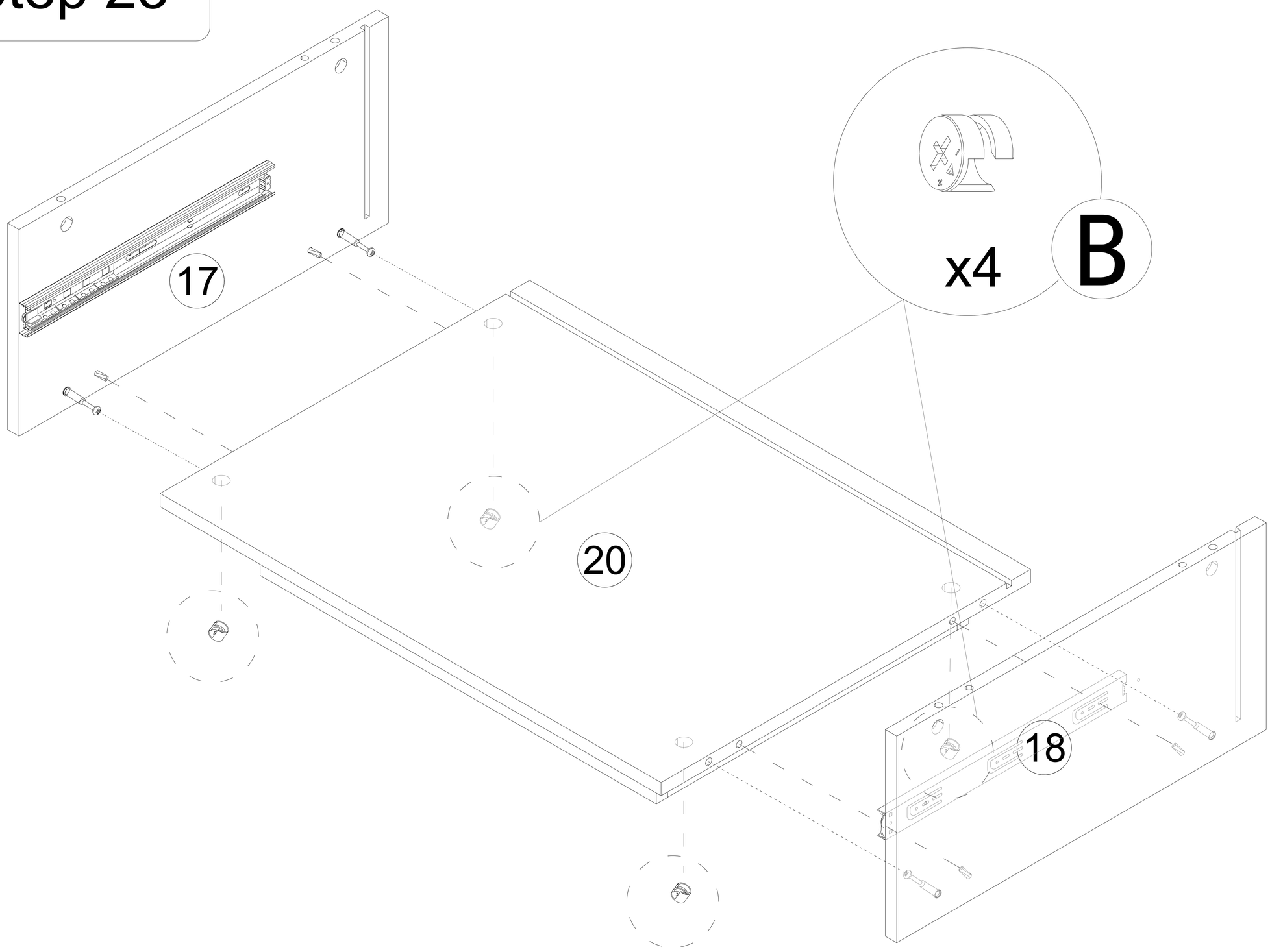

Step24

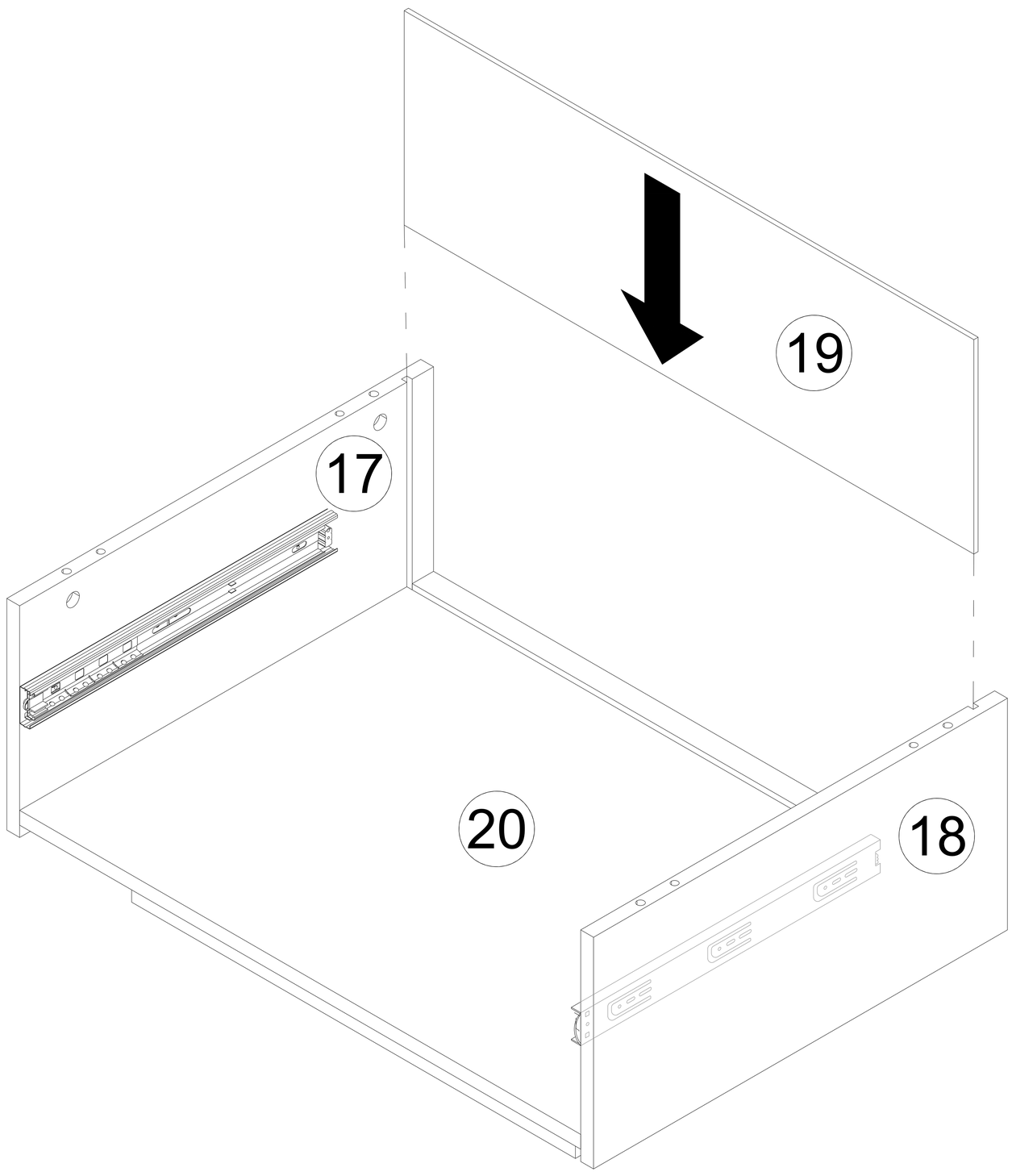

Step 25

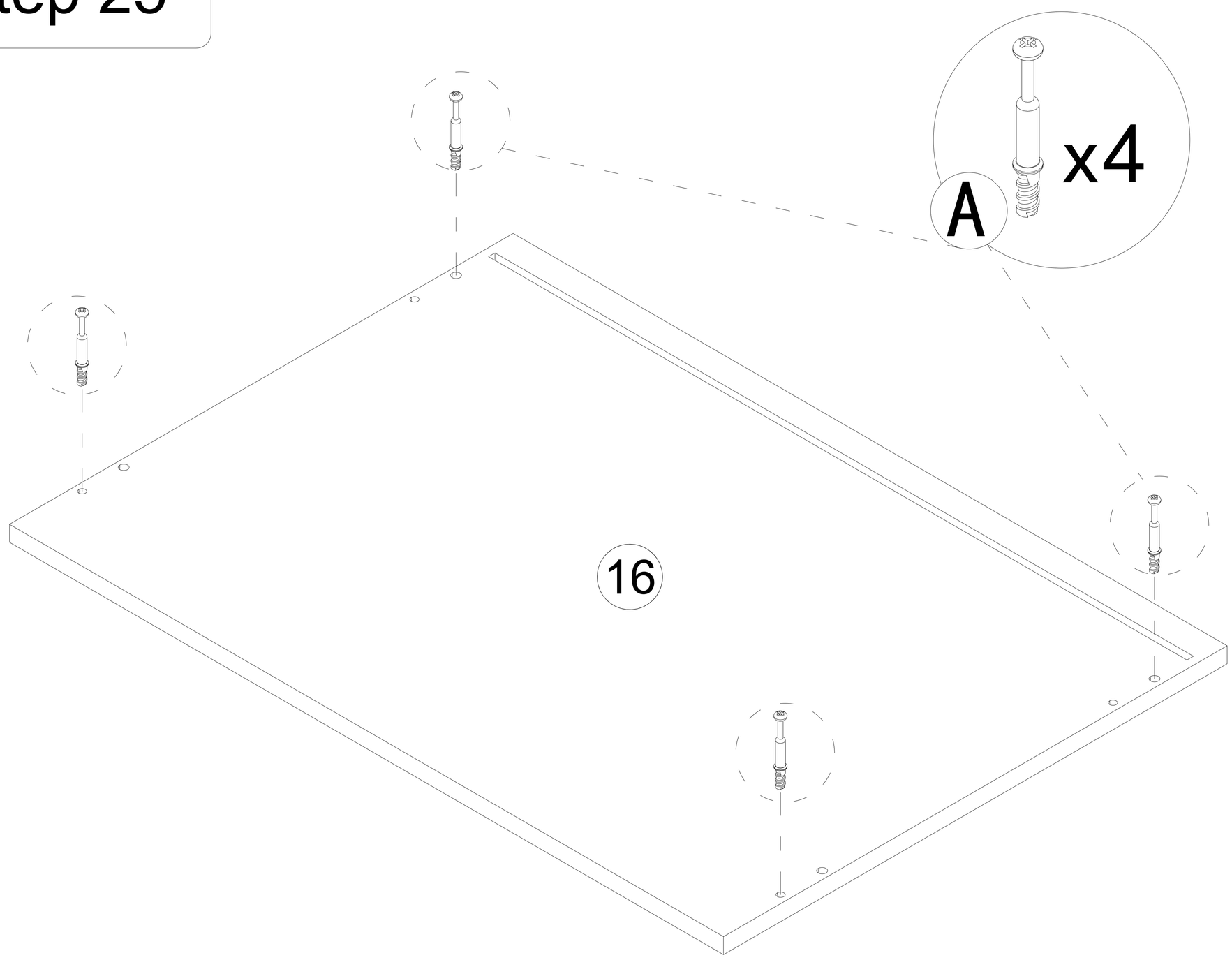

Step 26

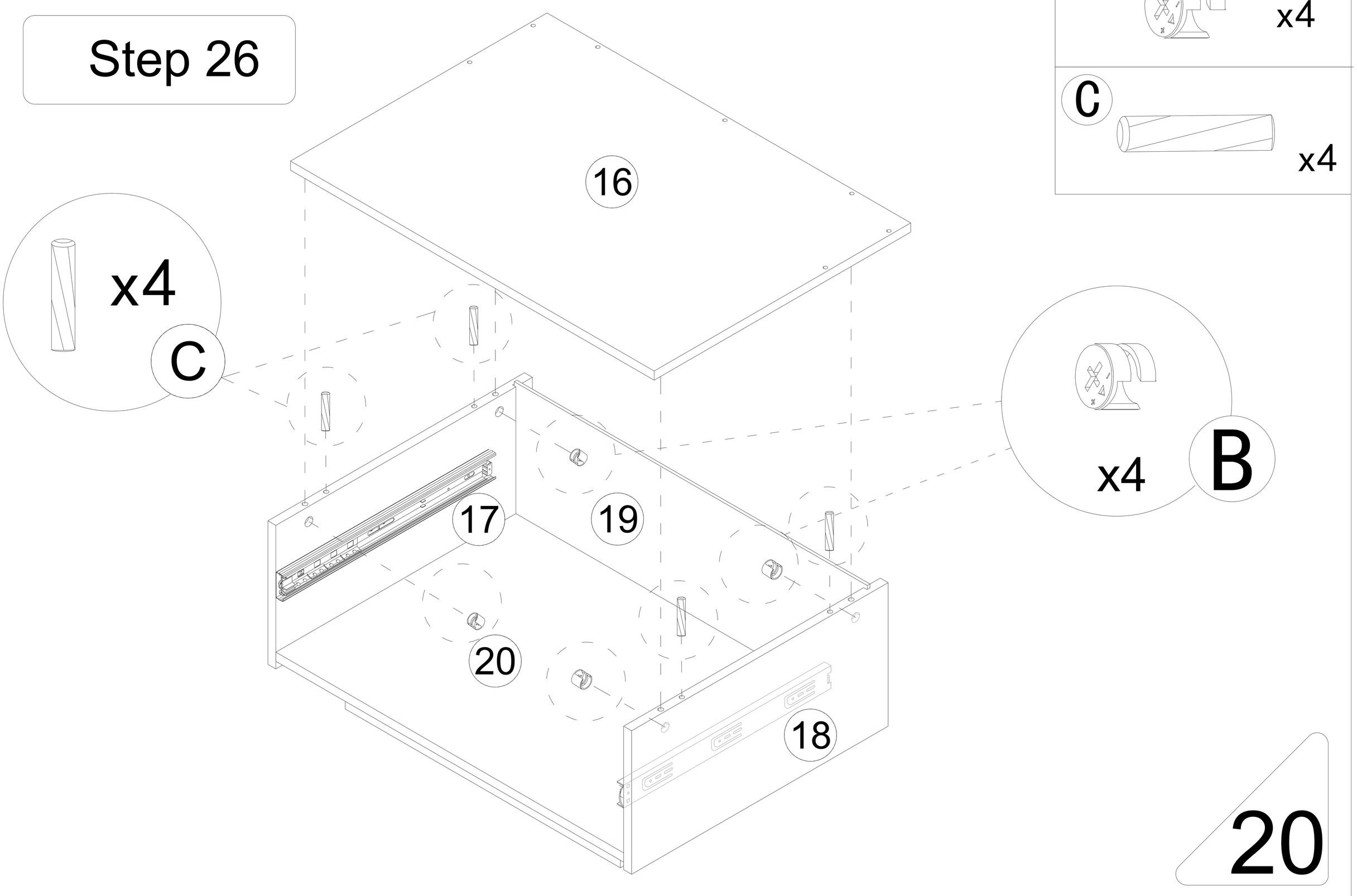

Step 27

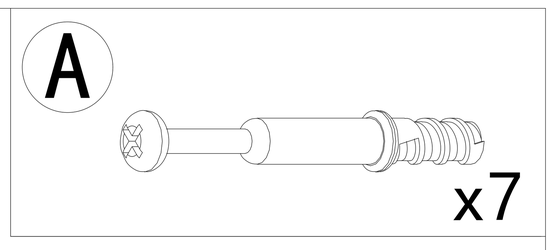

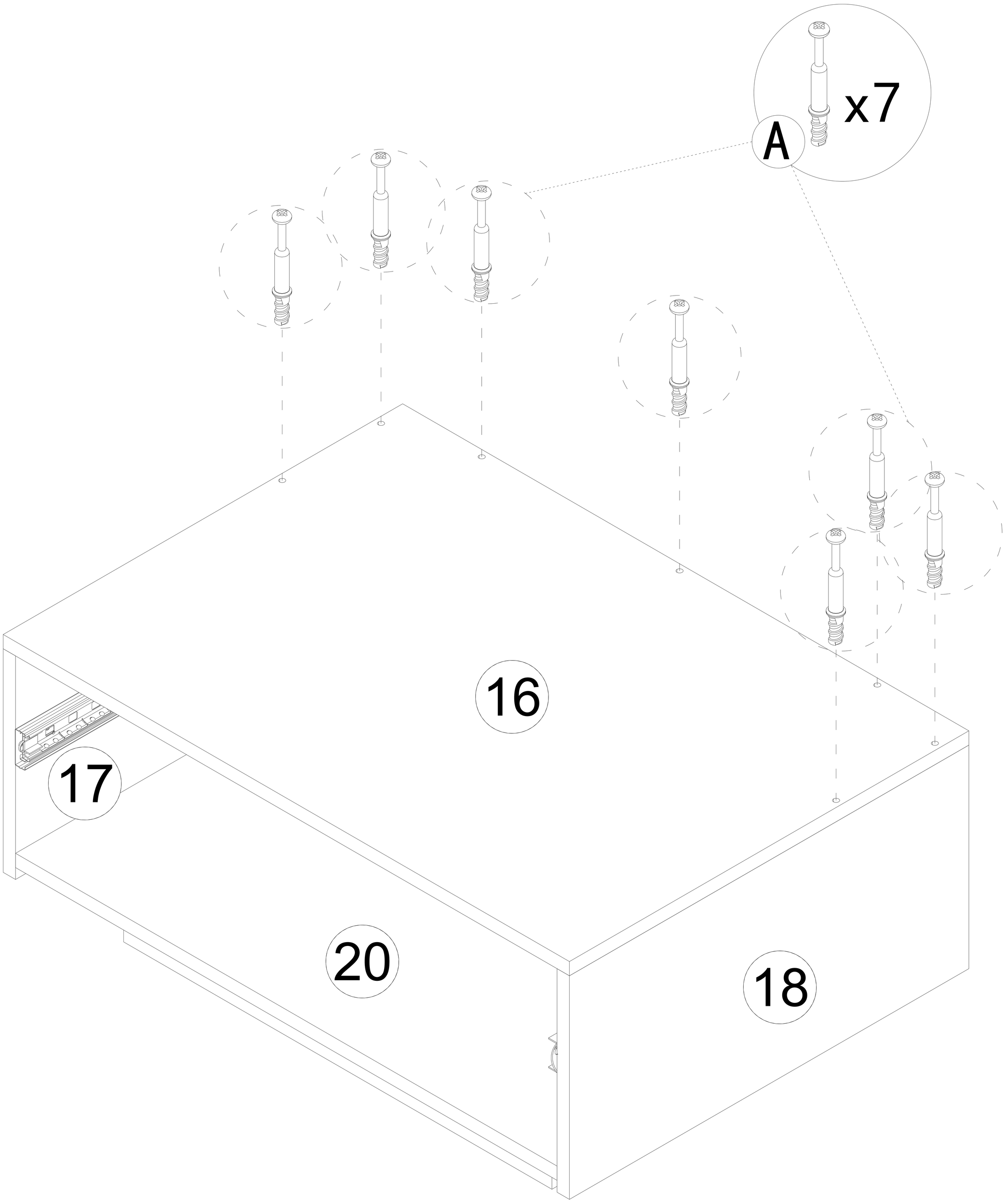

A		19pcs	B	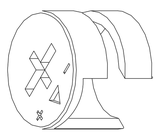	26pcs
C	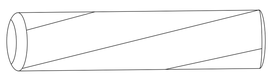	4pcs	D	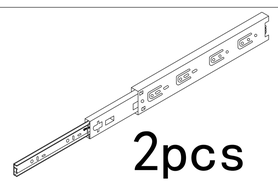 2pcs	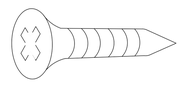 4pcs
F	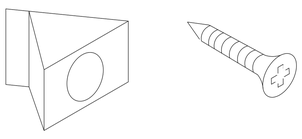	6pcs			

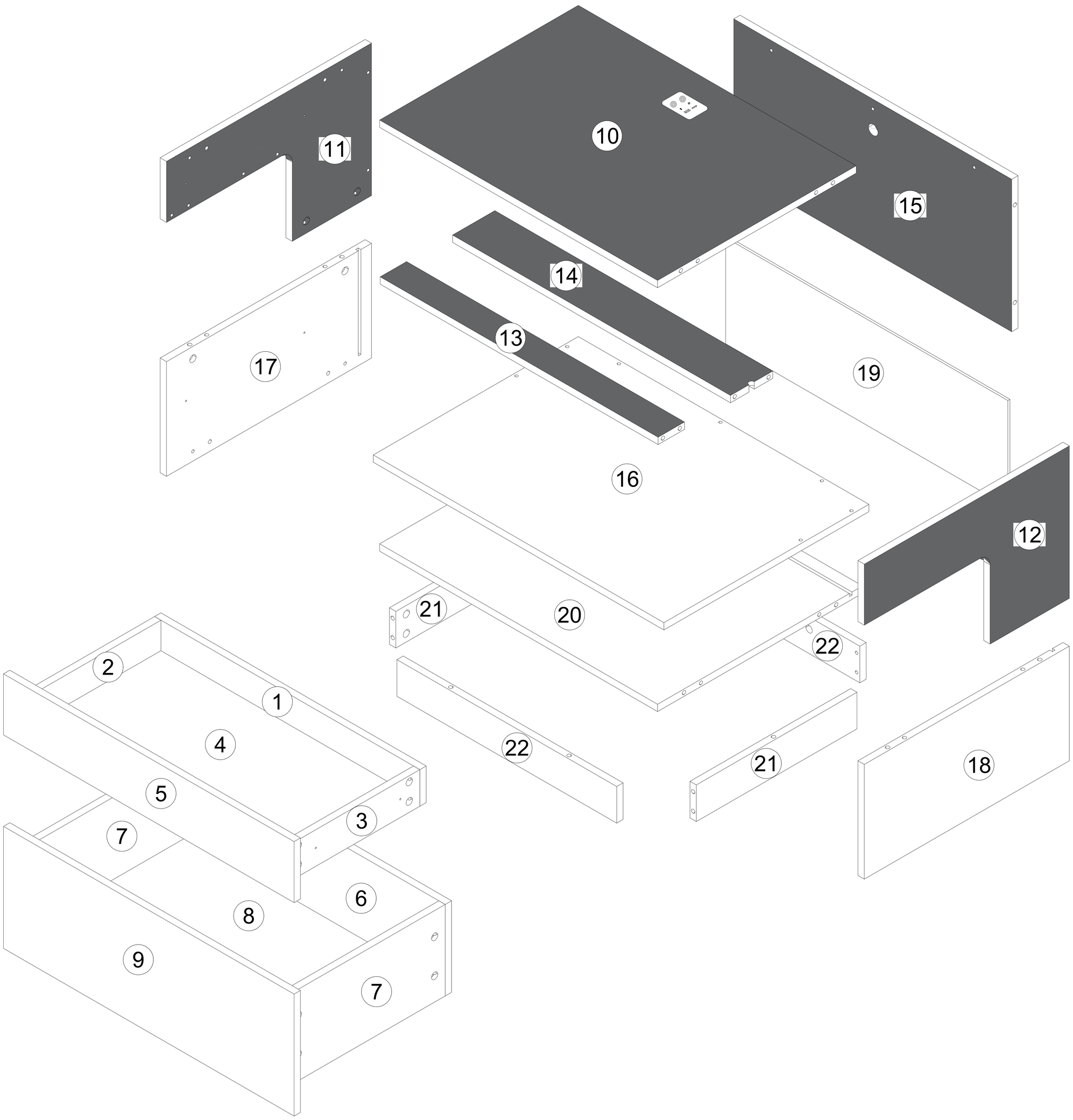

Step 28

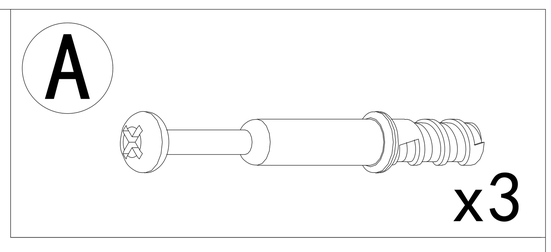

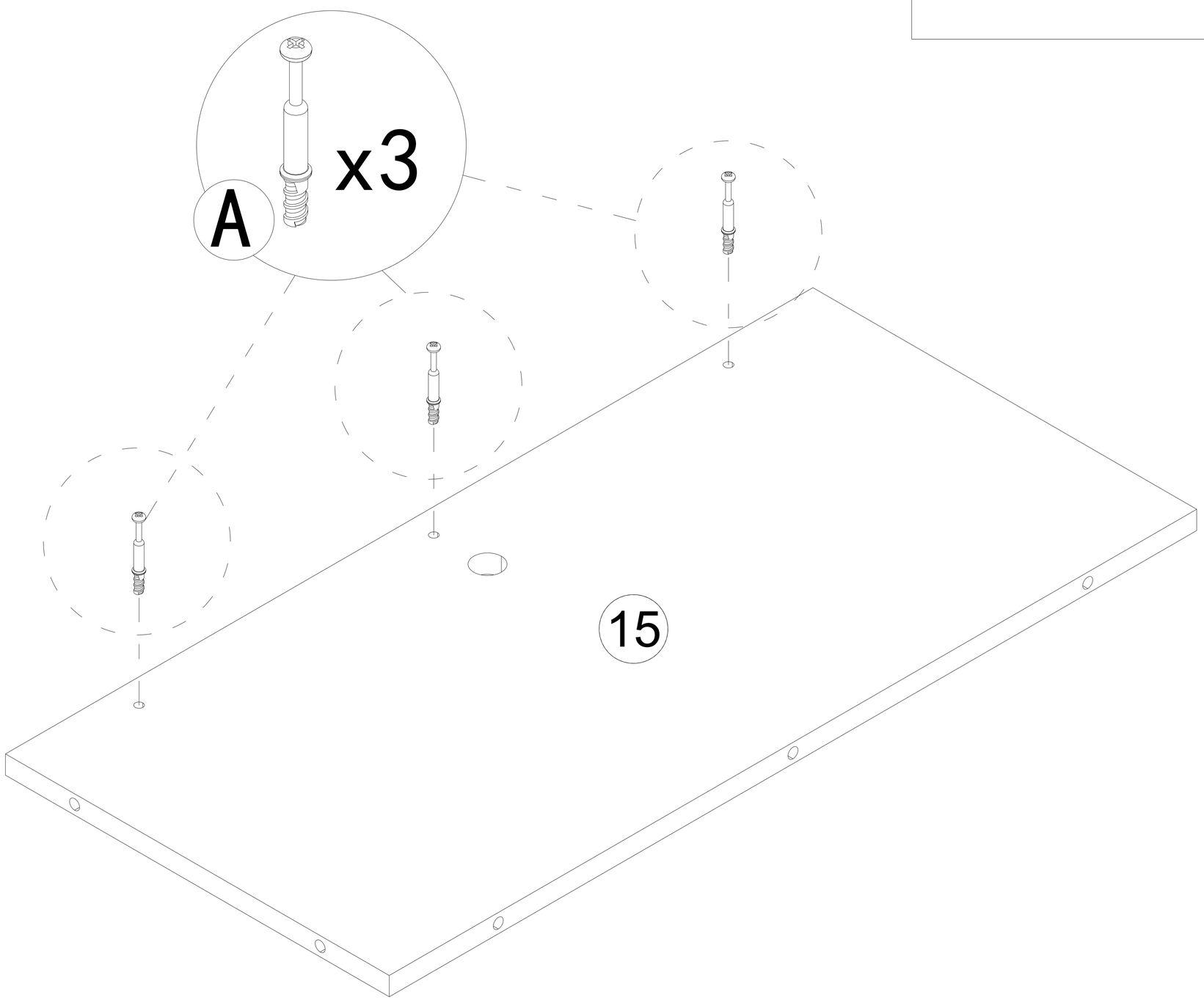

Step 29

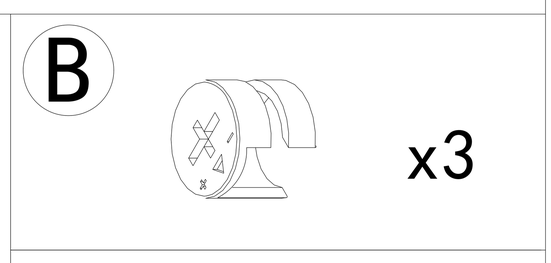

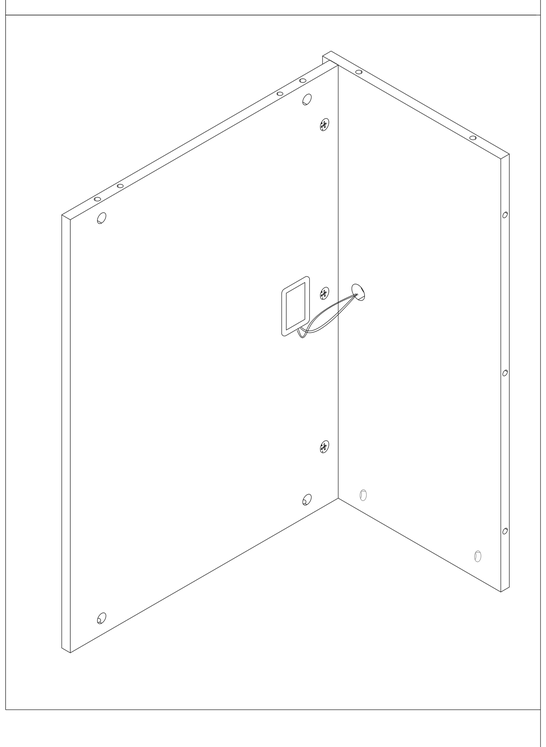

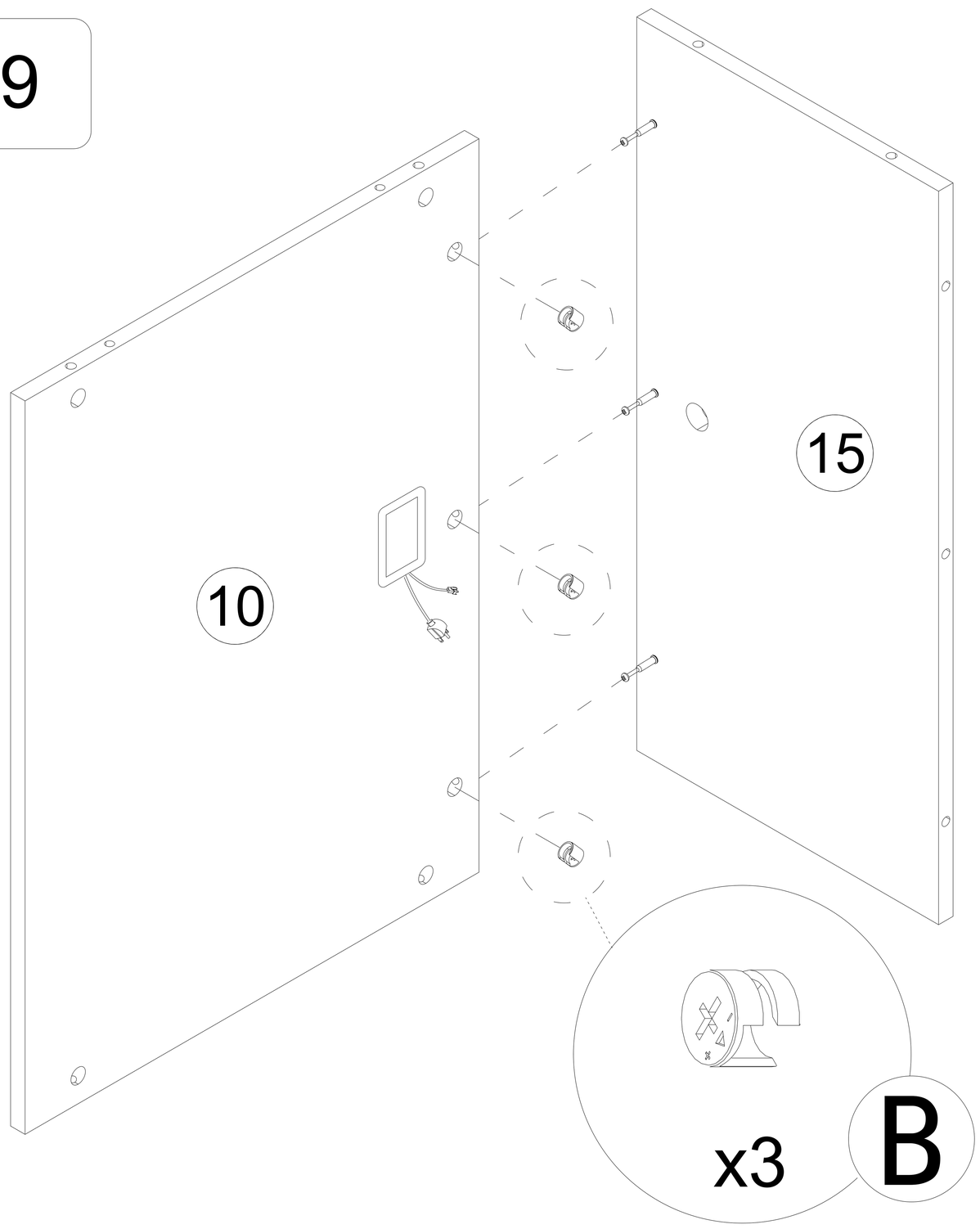

Step 30

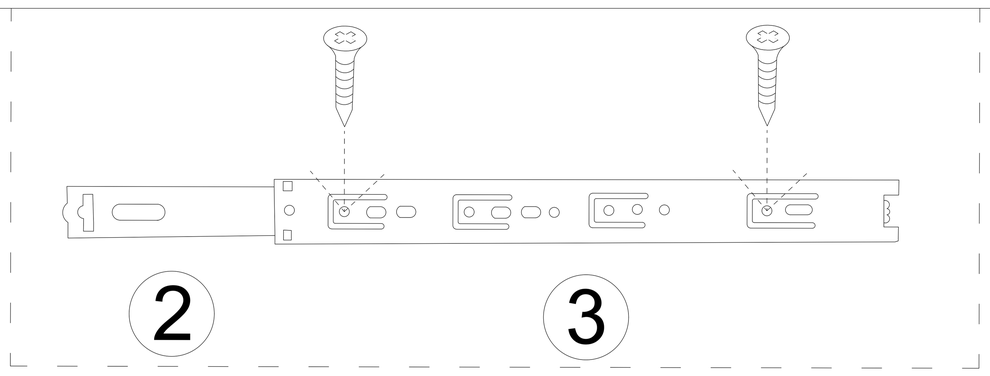

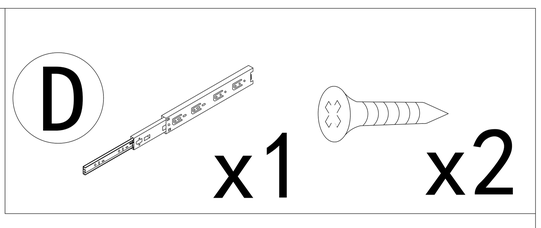

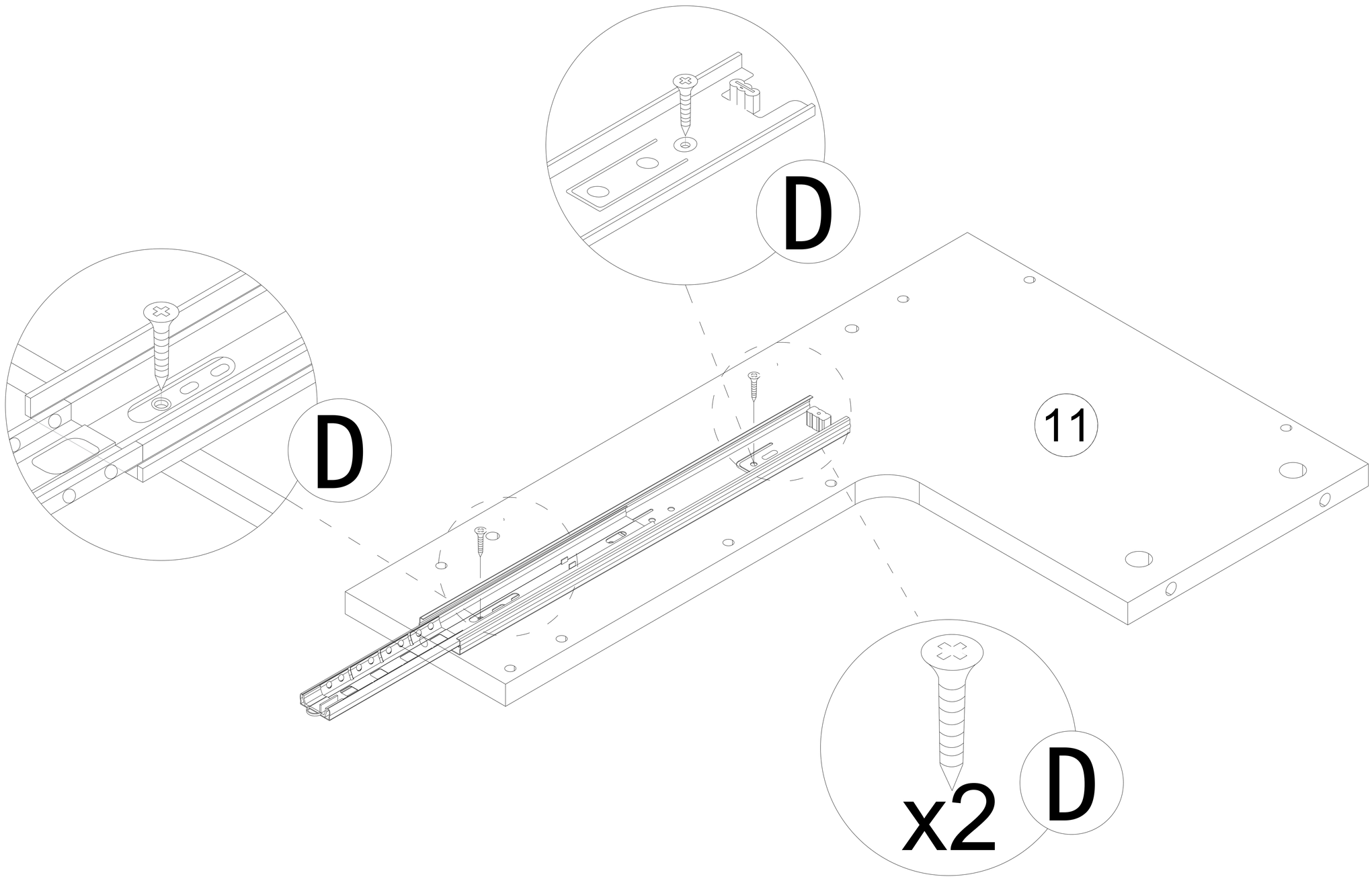

Step 31

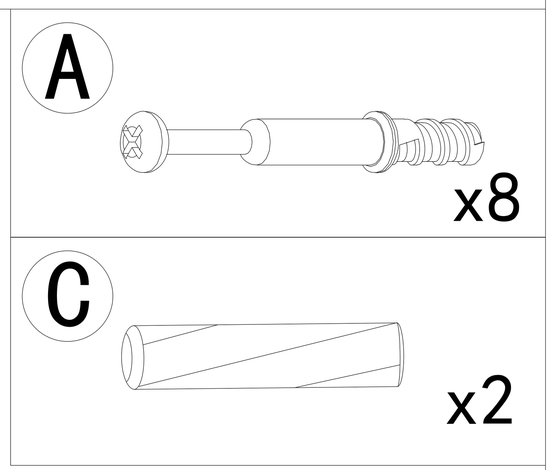

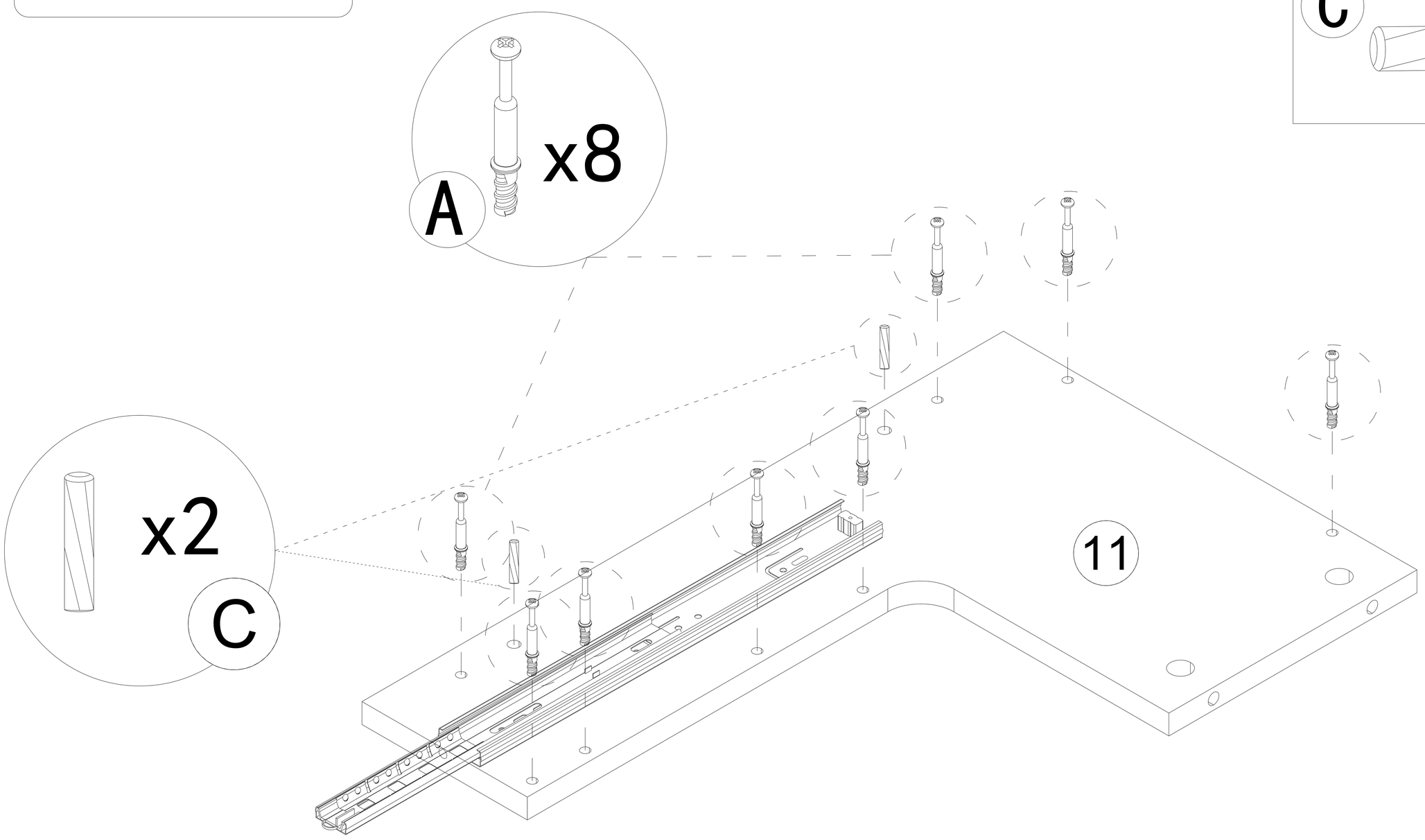

Step 32

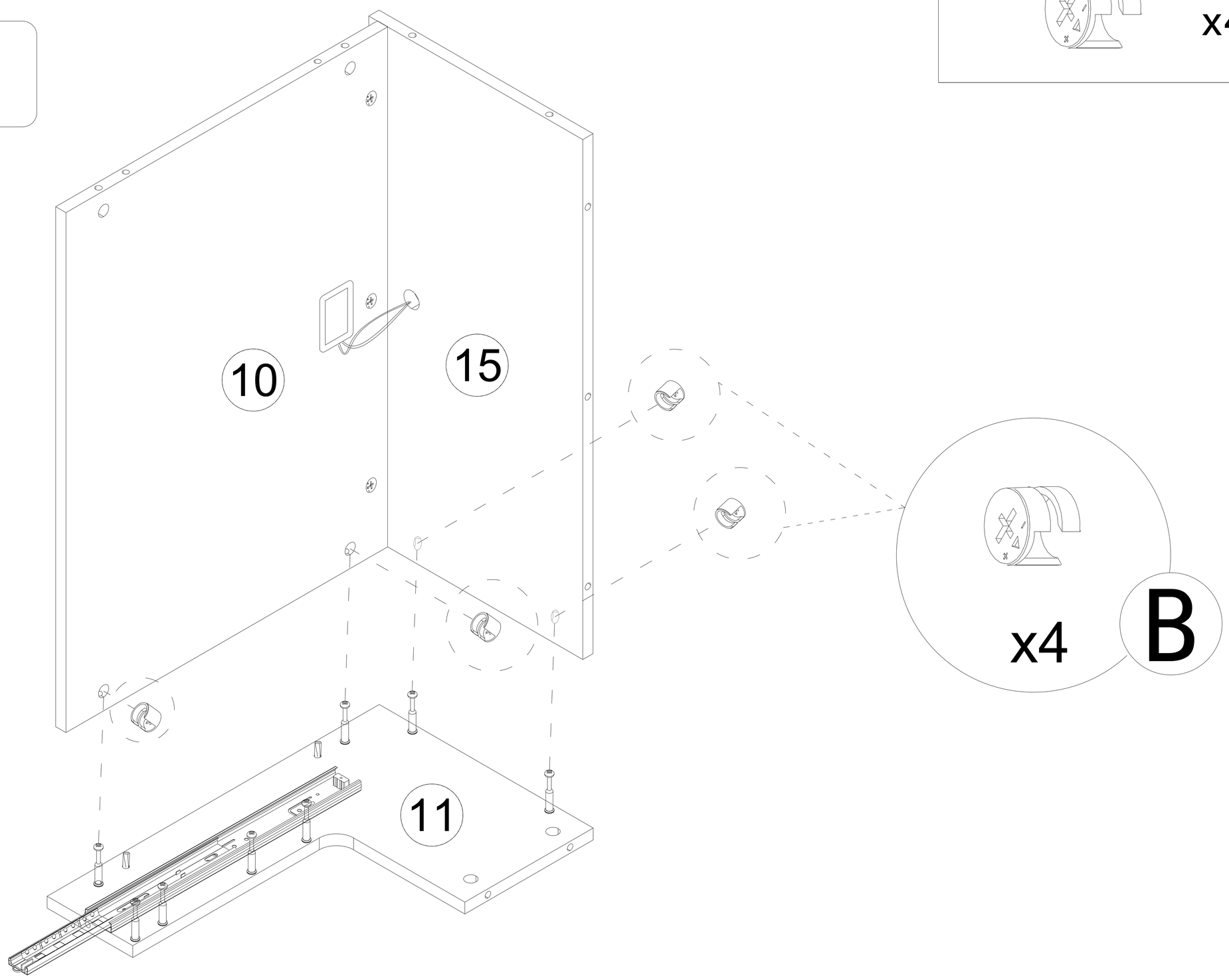

B x4

Step 33

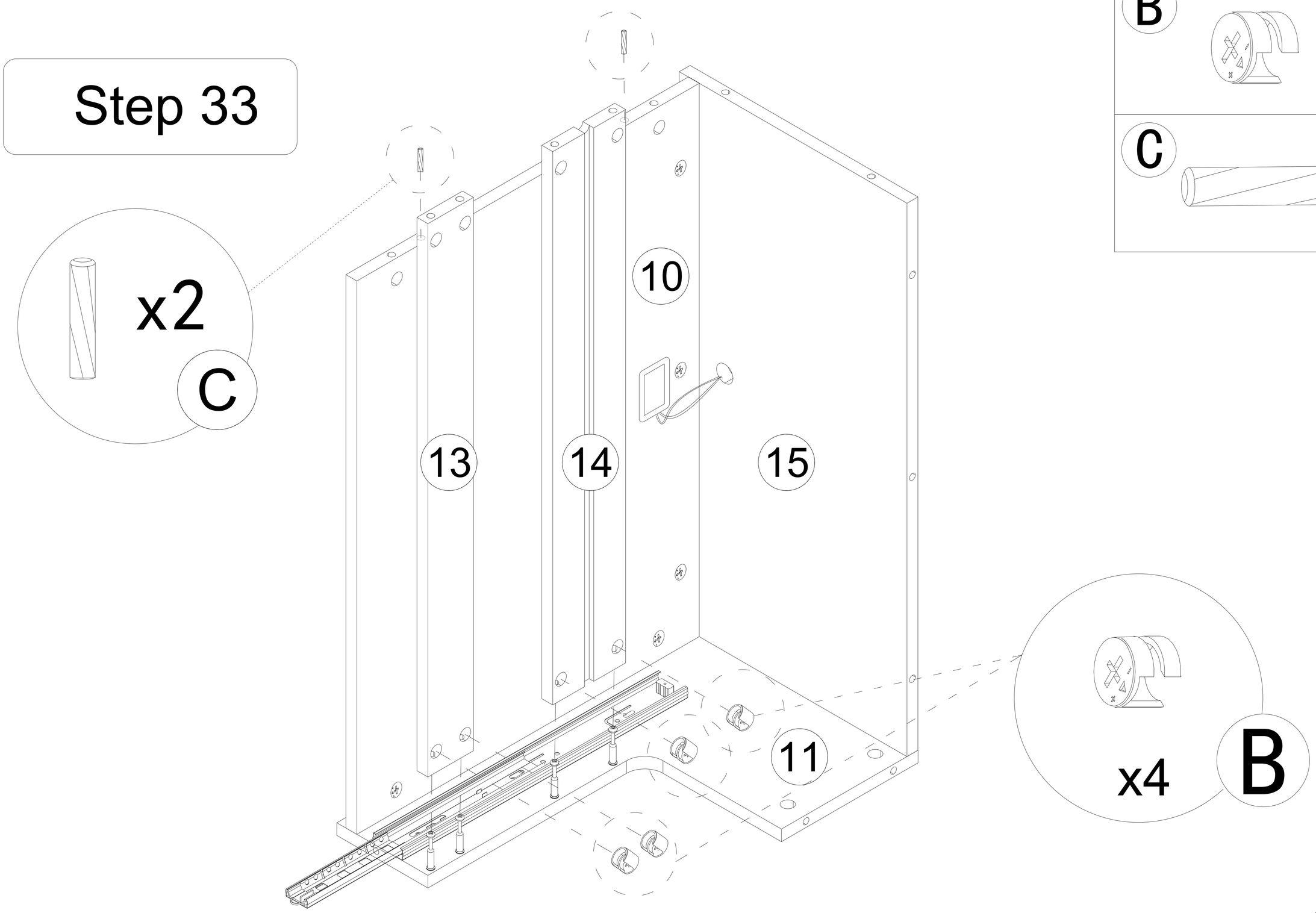

B x4

C x2

Step 34

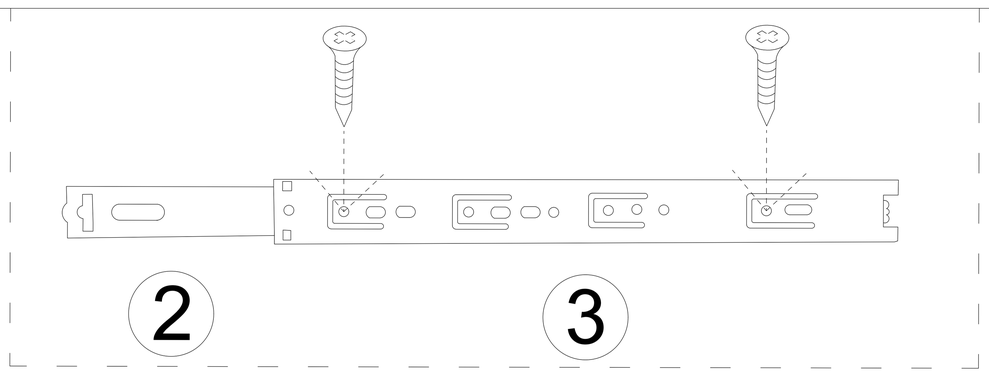

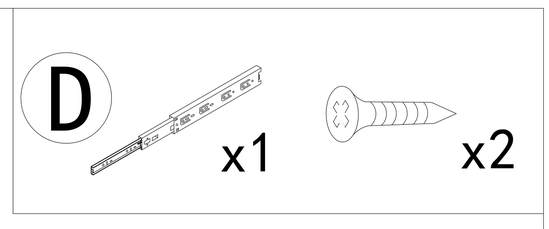

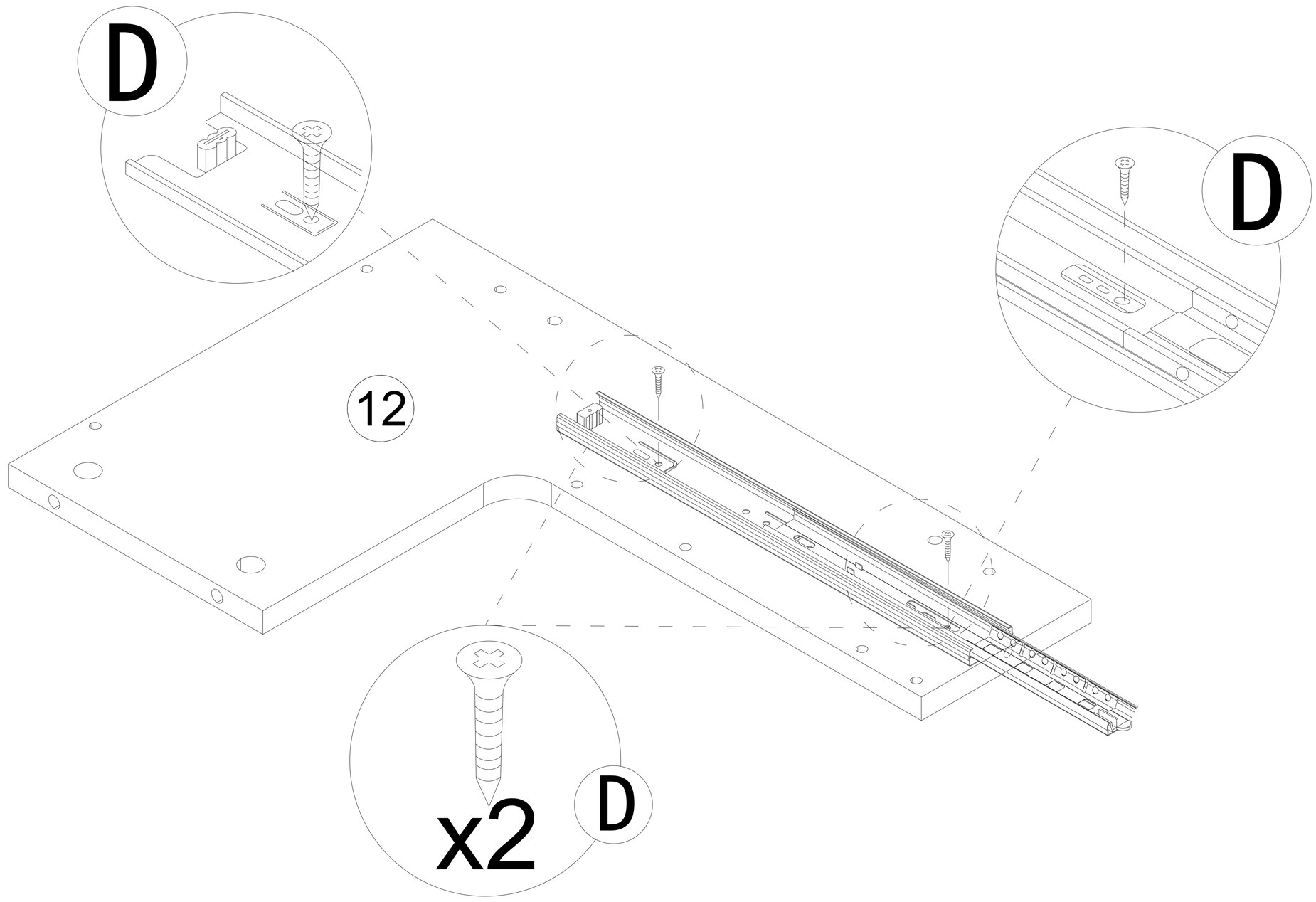

Step 35

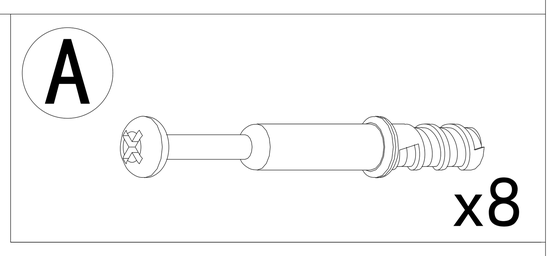

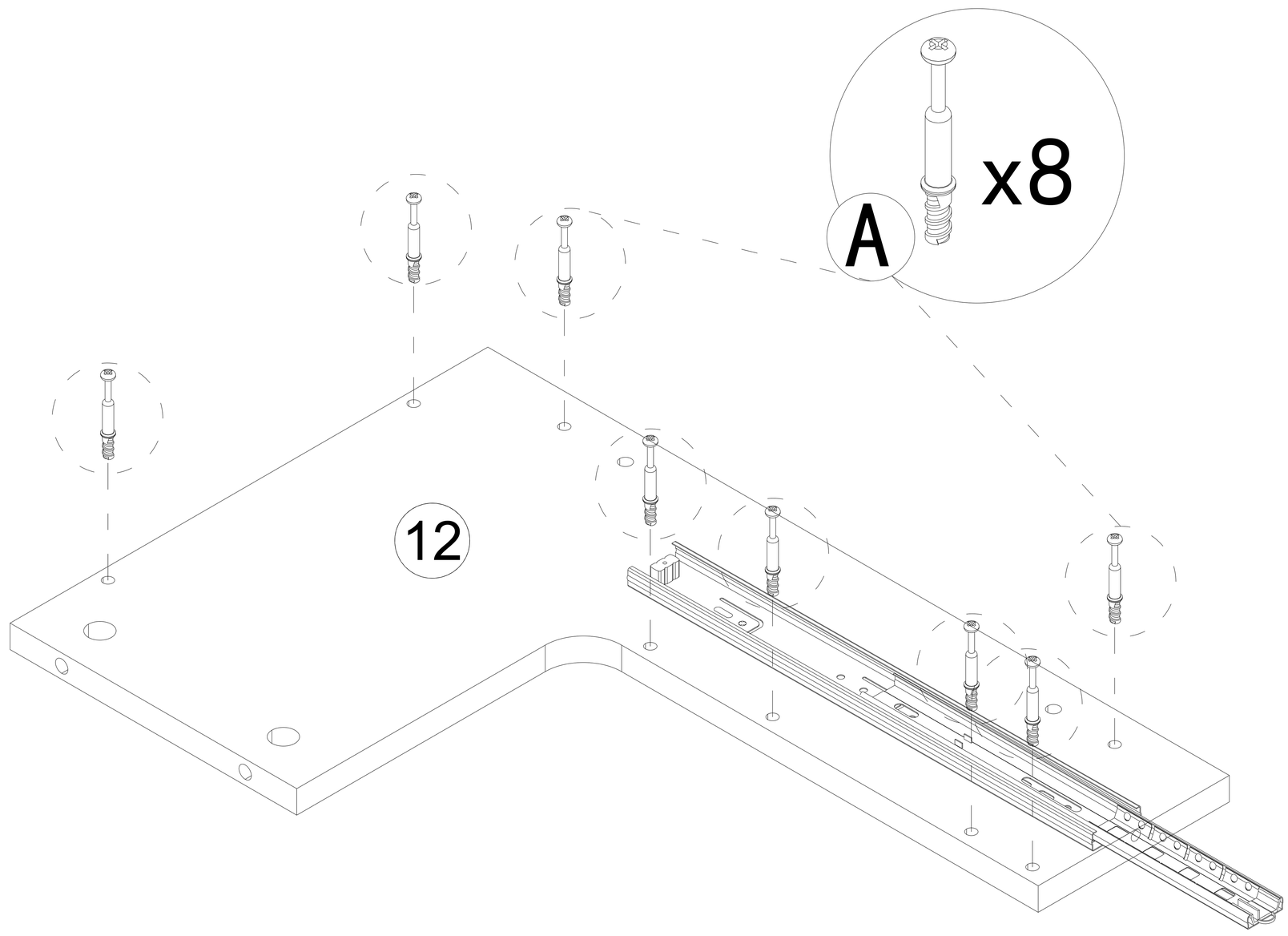

Step 36

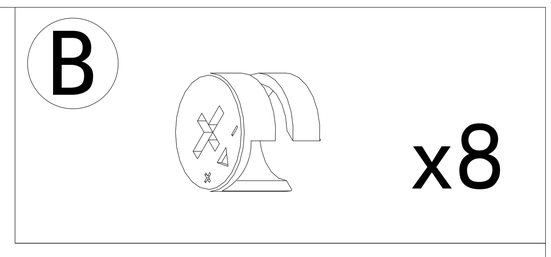

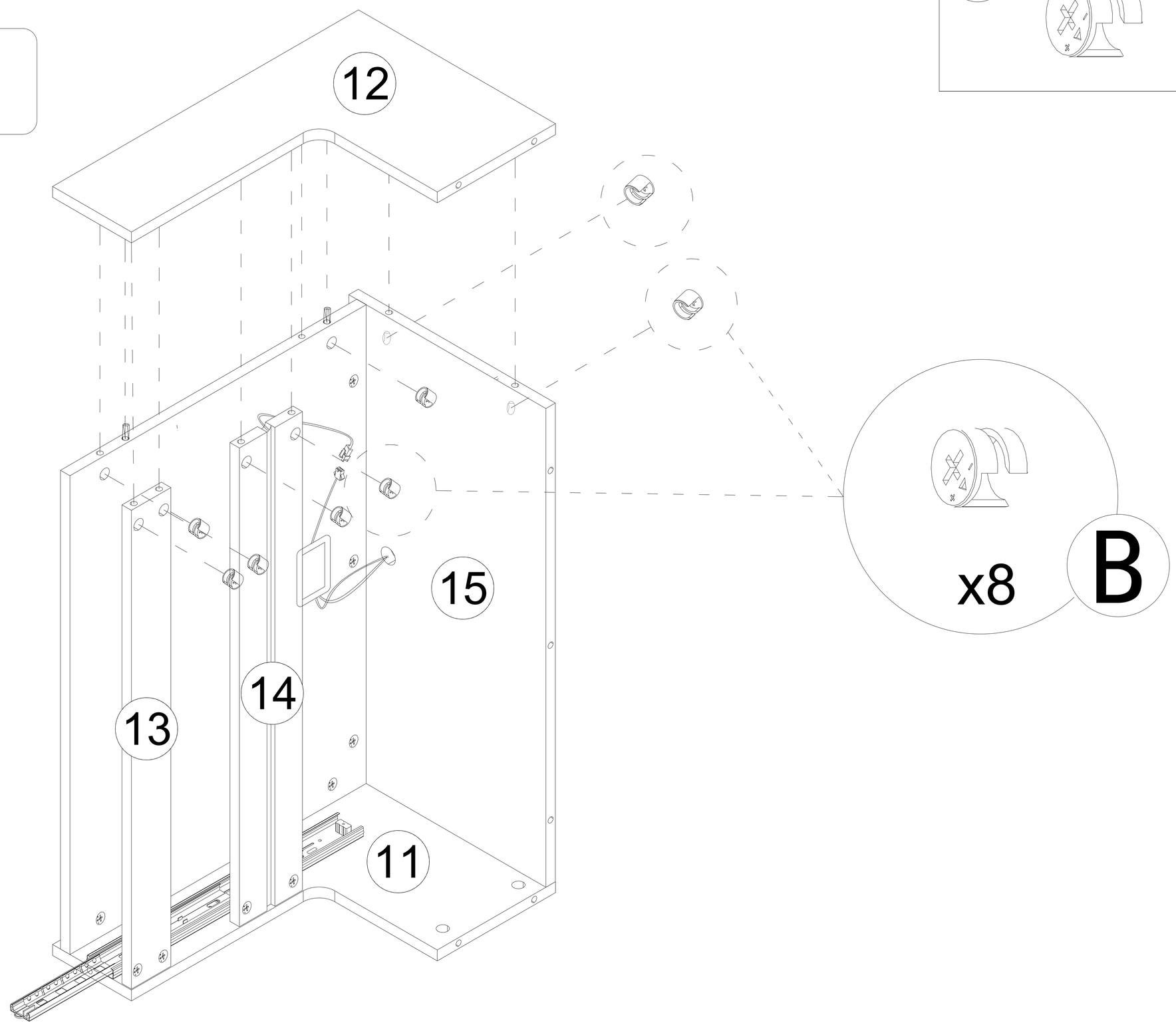

Step 37

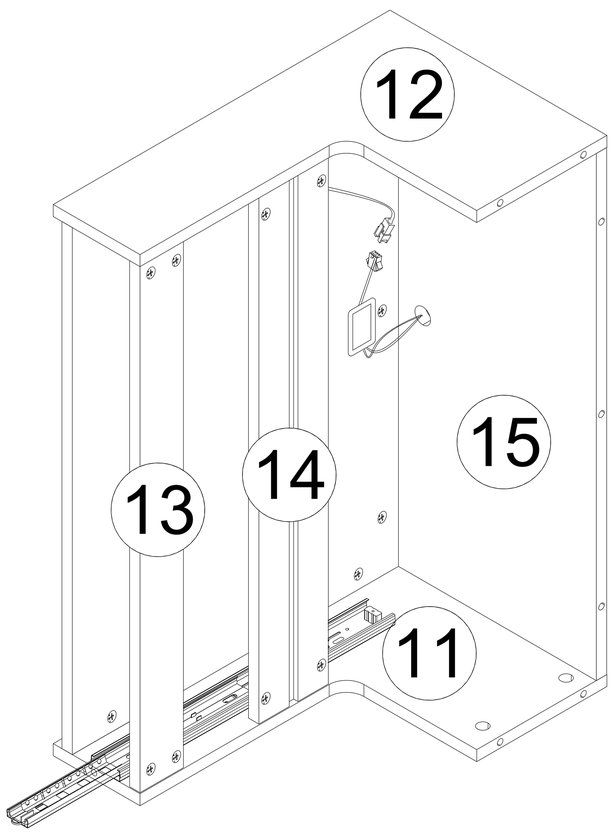

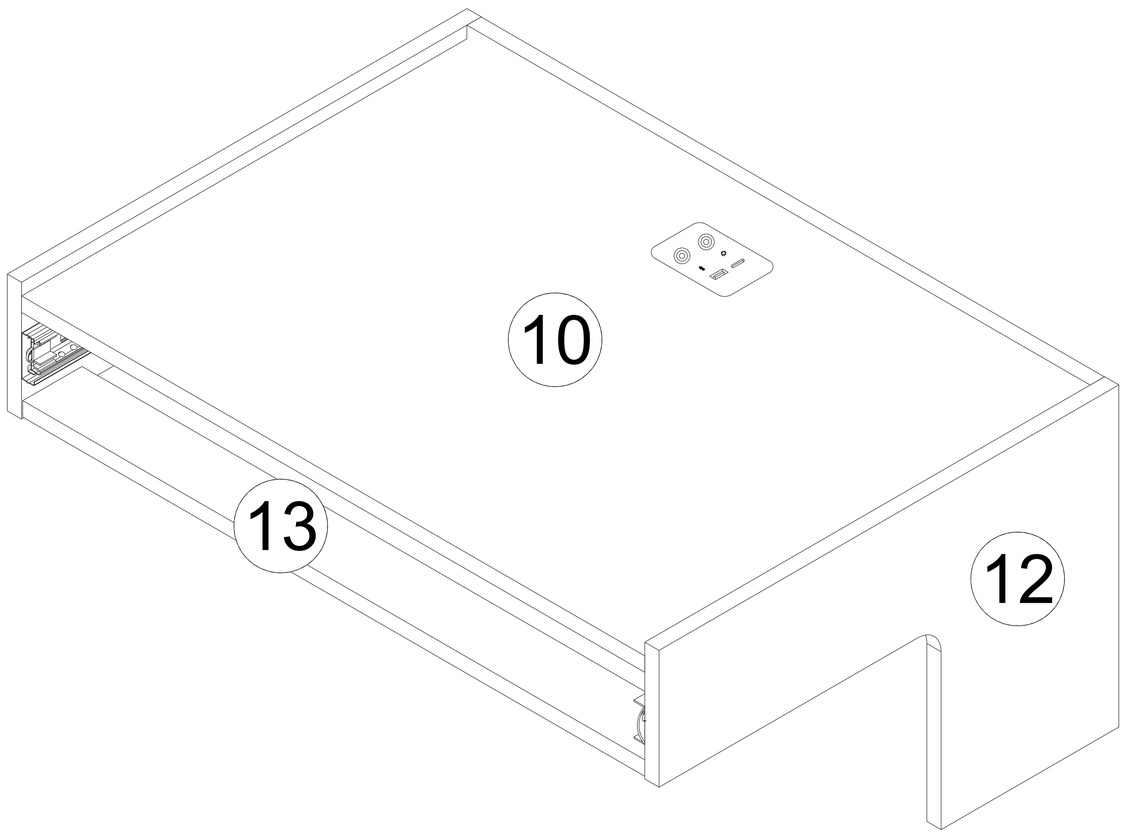

Flip it over

Step 38

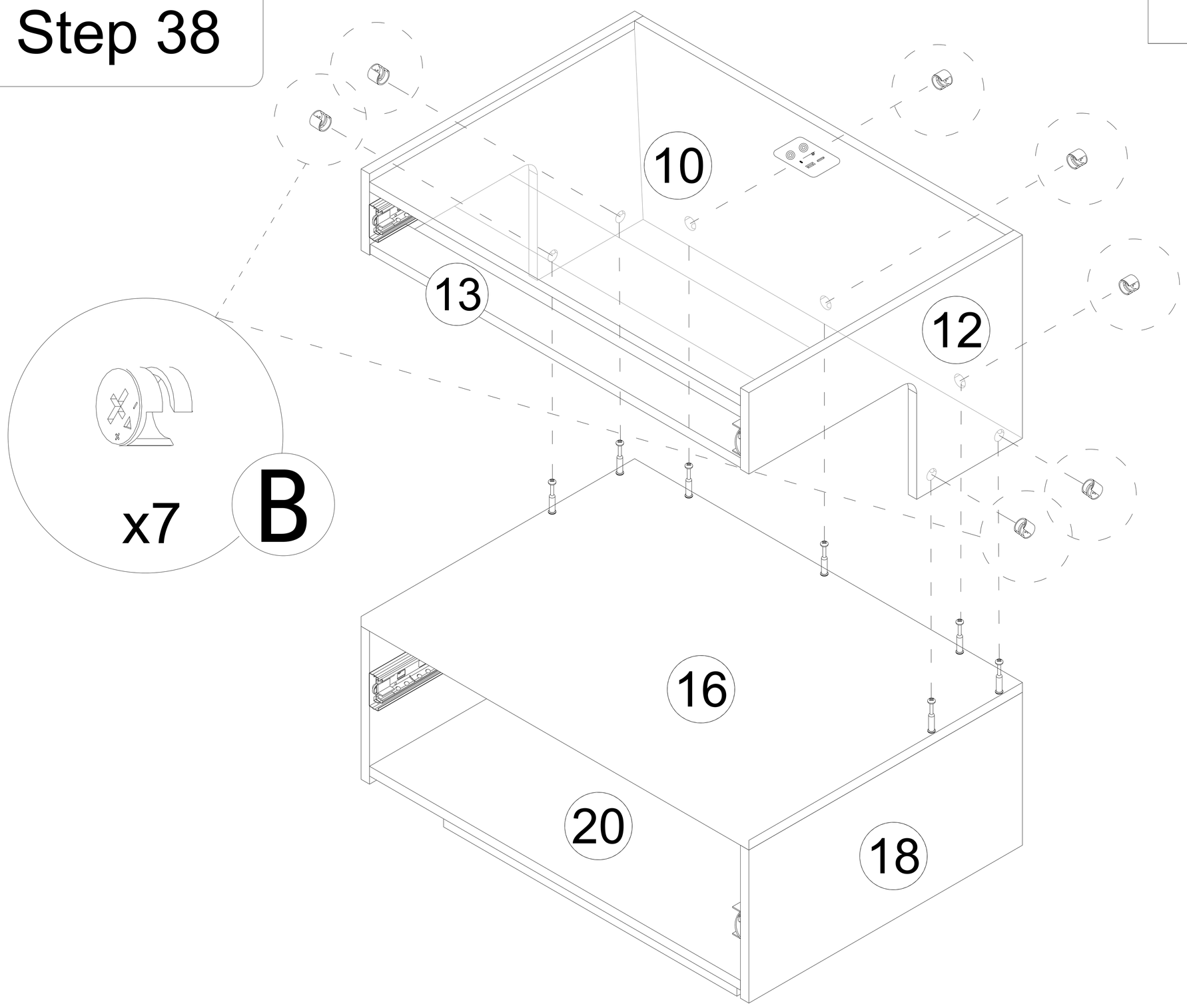

Step 39

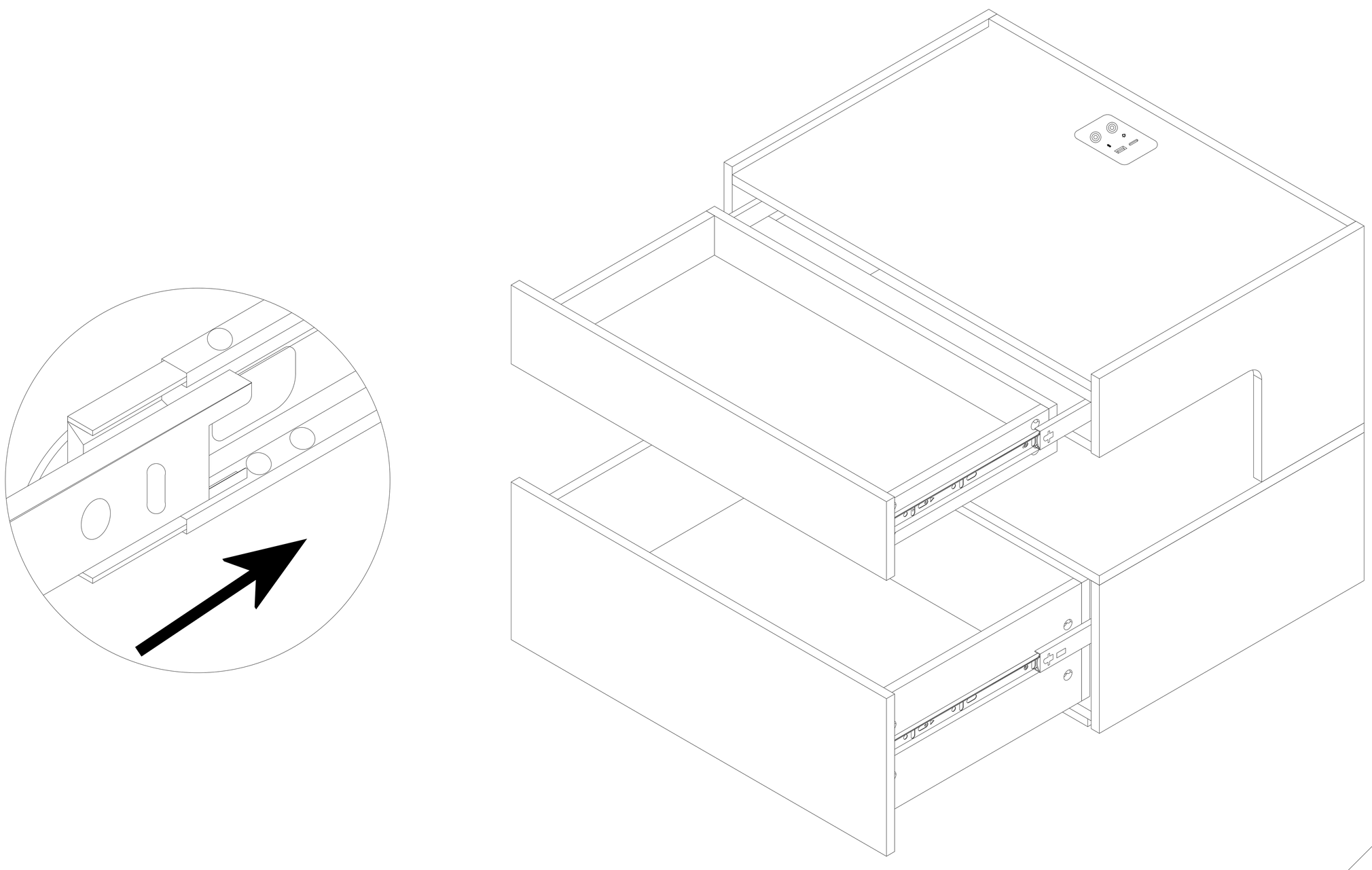

Step 40

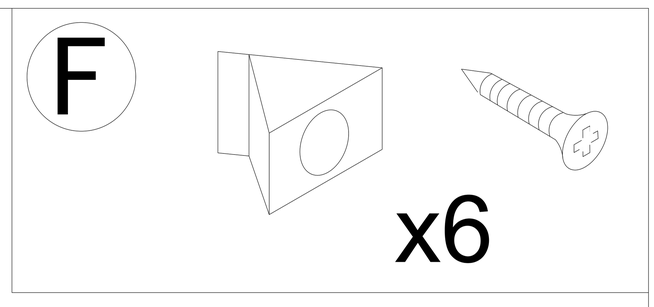

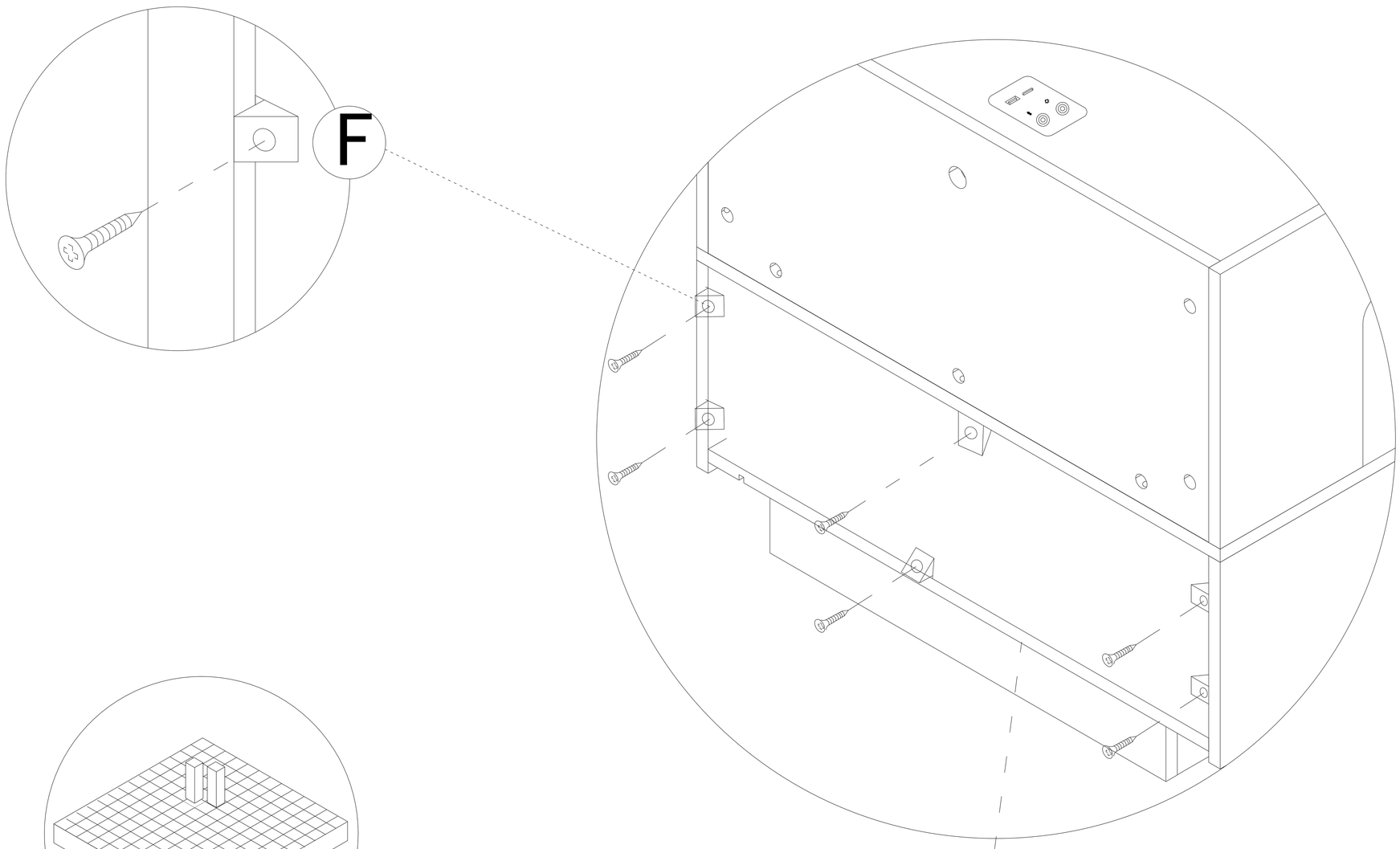

Turn around

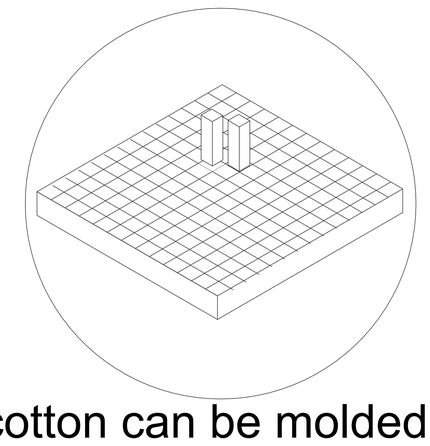

Black pearl cotton can be molded into the desired shape by deducting small squares

23

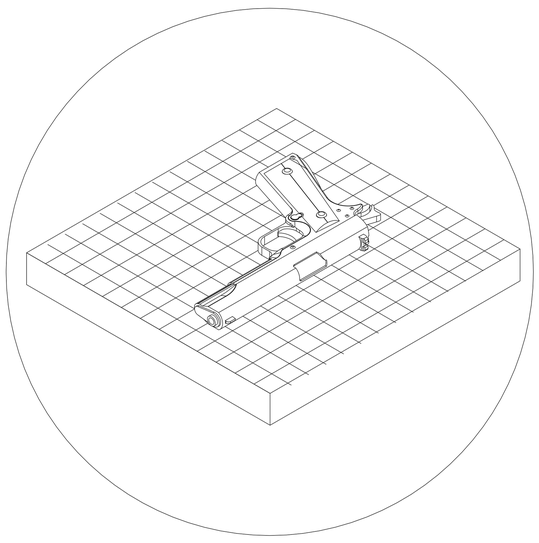

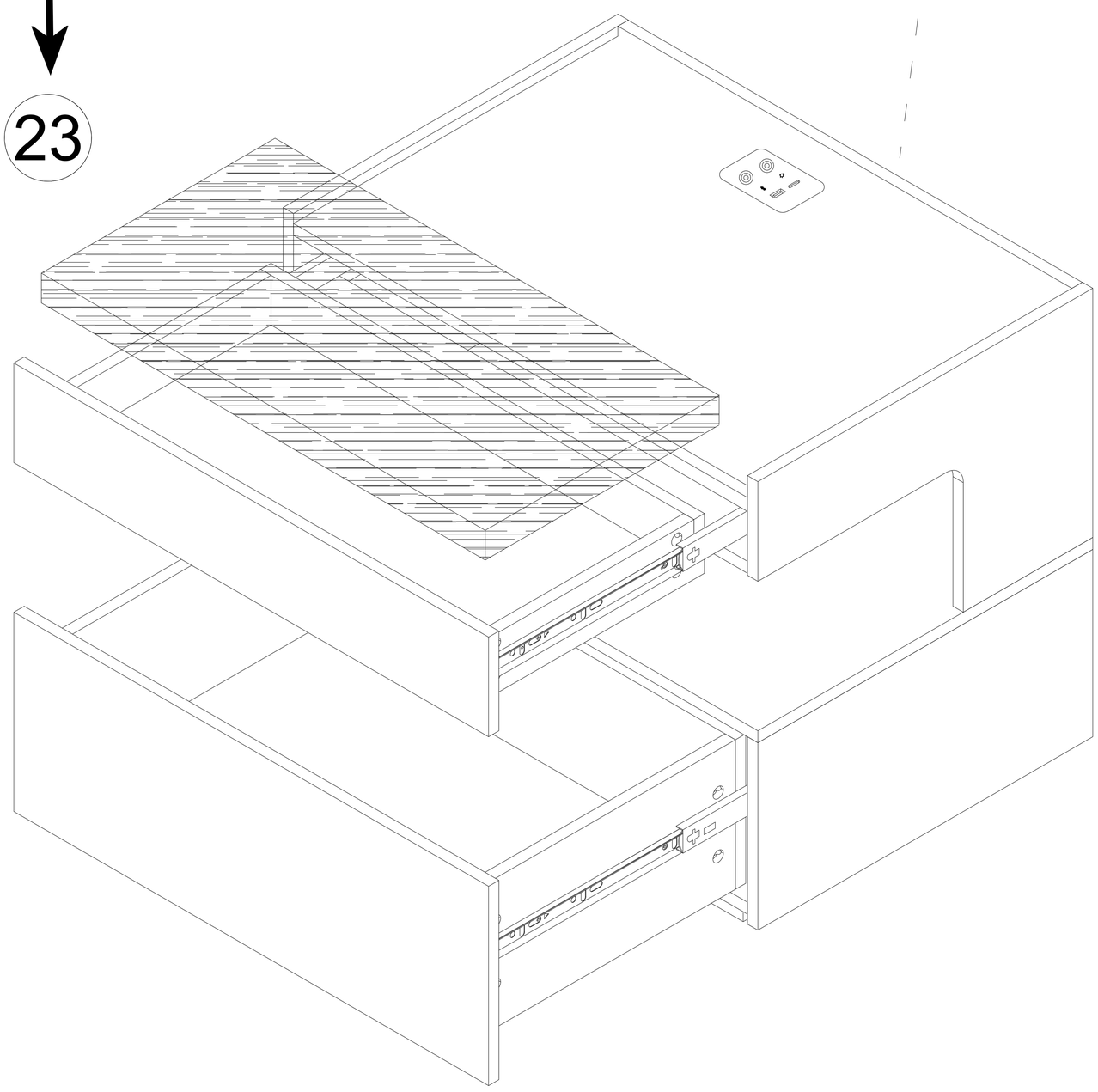

Step 41

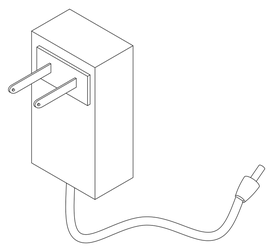
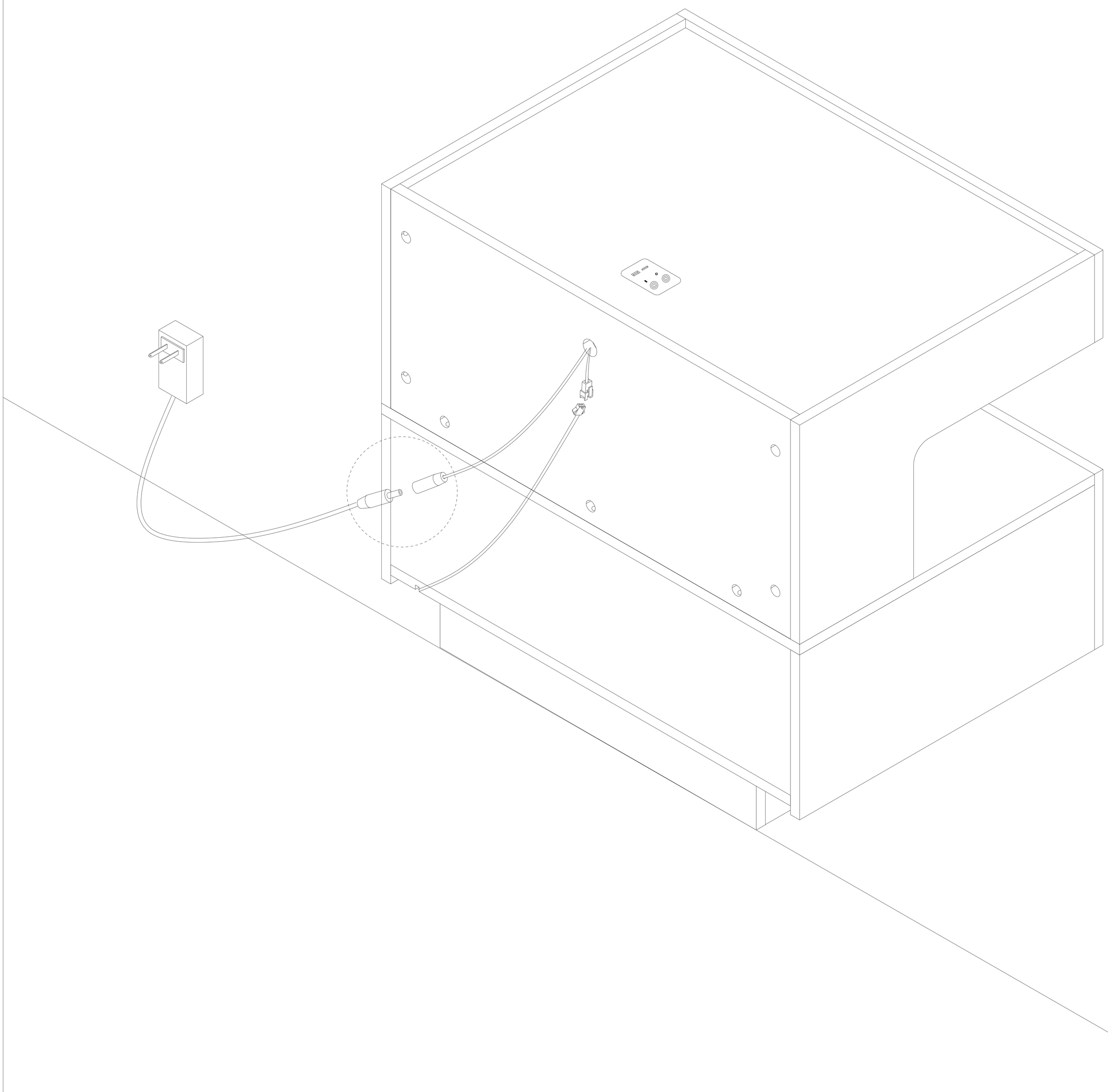
x1