CW30366 ASSEMBLY INSRUCTIONS

PARTS


Front Panel


Back Panel



Left Panel



Right Panel

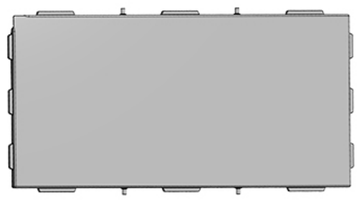
Floor

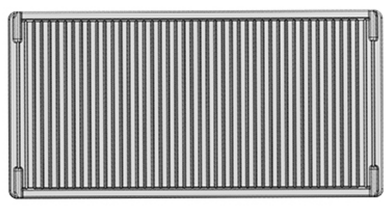
Roof


Divider


Screw x 1


Screw x 12

INSTRUCTIONS

1

Fix the floor to back panel.

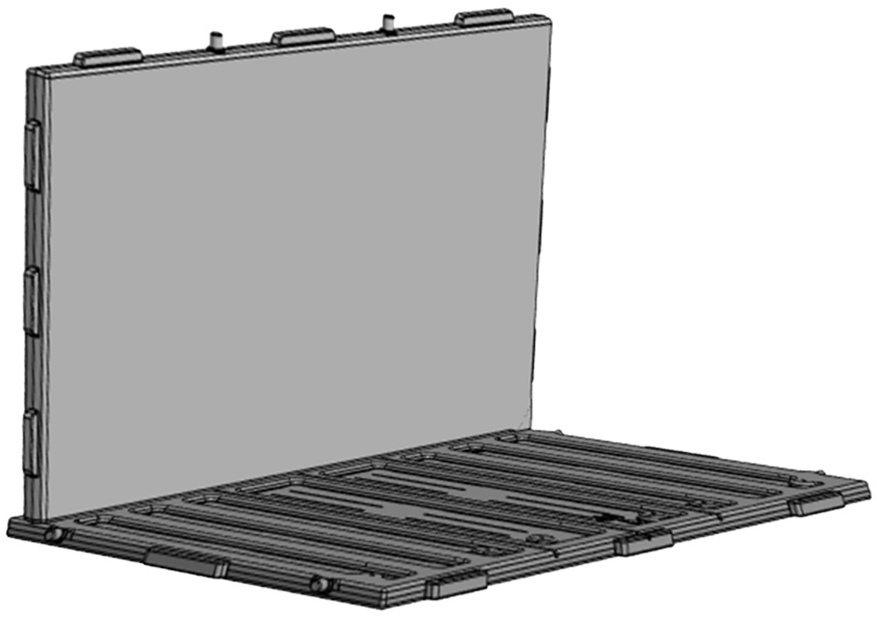

2

Fix left panel and right panel.

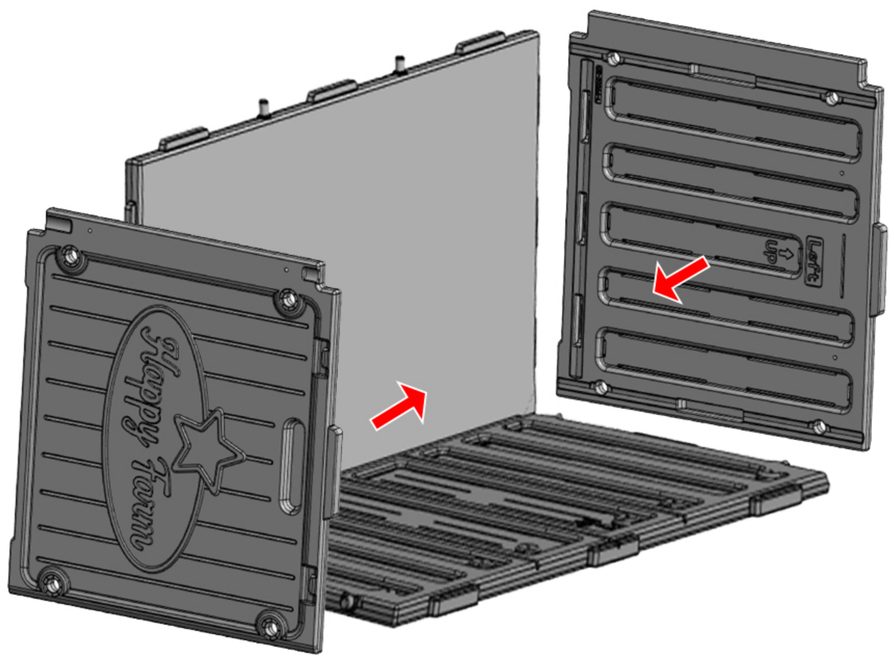

3

Fix the front panel.

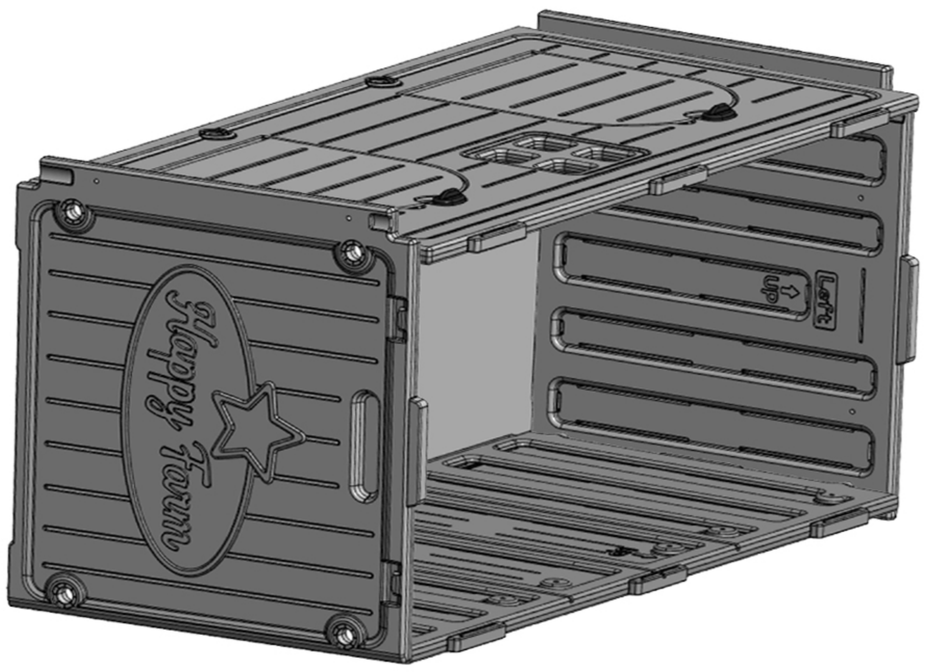

4

Place the divider in right place.

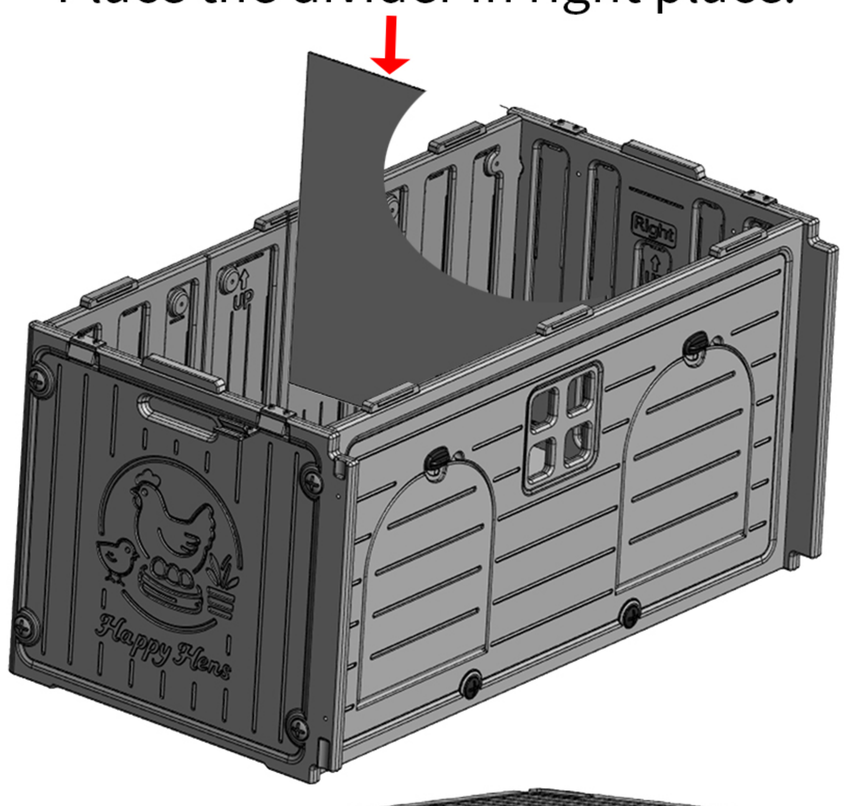

5

Fix the roof, and fasten all screwers. Perfect Finish.

