S0002C 2 Head Sliding Rail Shower Set

Before Installing :

Please check first if all accessories included in the package.

Product Packing List

Item	Product Name	Quantity	Unit	Remark
1	Hand Shower	1	Piece	
2	Shower Head	1	Piece	
3	Sliding Rack	1	Piece	
4	Shower Arm.	1	Piece	
5	Metal Hose	1	Piece	
6	Washer	3	Pieces	
7	Cross Screwdriver	1	Pieces	
8	Pipe Sealing Tape	1	Piece	
9	Installation Instructions	1	Piece	

Instruction includes information on proper installation and maintenance. Please read the instructions carefully before installing the products. Mounting particles are included for easy installation.

Actual product might be slightly different in appearance, but same in structure. For better accuracy, please refer to the actual object.

S0002C 2 Head Sliding Rail Shower Set

Inclusive Parts:

Handshower

Showerhead

Sliding Rack

Metal Hose

3 Washers

Helpful Tools:

Screwdriver

Feature ：

This is a drill free sliding rack with suction cup. Product can be easily installed in a few easy steps.

Installation Instructions:

(1)

1.(as shown in the following image) Lifting lever rod, connector, lengthened connector.	2. A: If the connector on the wall is hollow, twine the PTFE tape on the screw thread of lengthened connector, and then revolve it clockwise into the current hole on the wall. Next, throw a short connector on the connector outside the wall, and press it inside from the front. B: If the connector on the wall is on the same plane with the wall, the lengthened connector is unnecessary. Twin the PTFE tape on the screw thread of short connector, and then revolve it clockwise into the current hole on the wall.
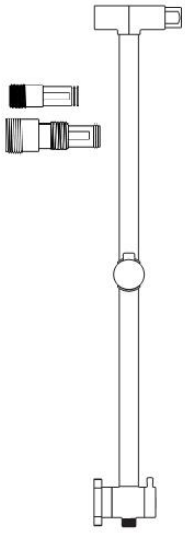	A、 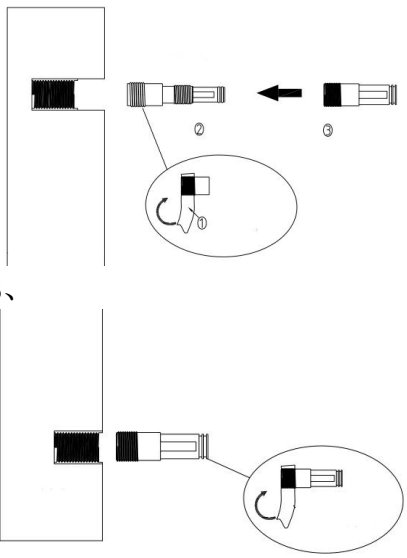

3. Tighten the connector, or tighten it by means of a wrench lest water leakage, and then install the blind flange.	Revolve the sucker down from the switching valve body, and you can select A, B or C in accordance with requirements A: At the position 635mm below the connector vertically, wipe the wall clean, and then pin the sucker on the wall trying to exhaust air, so as to make it close to the wall free from falling off. B: At the position 635mm below the connector vertically, stick the double sided adhesive tape on the wall evenly. C: At the position 635mm below the connector vertically, use screws to lock the base on the wall.
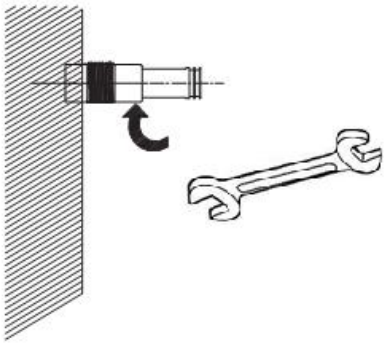	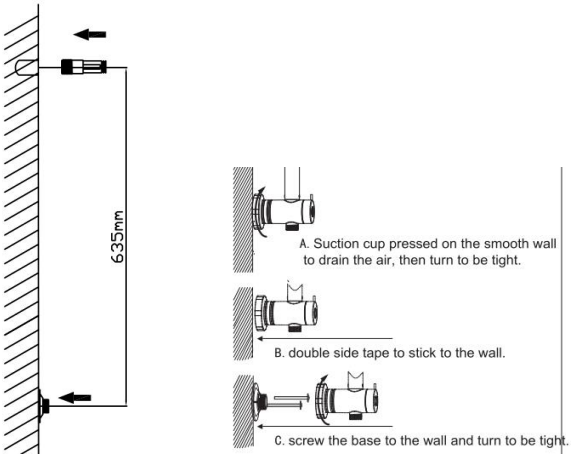
5. Install the shell of lifting lever at the same side with sucker to the connector on the wall.	6.Screw the base to the wall and turn to be tight.
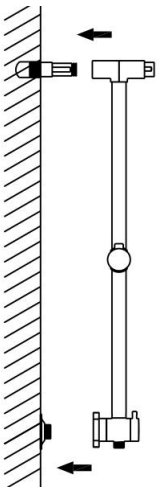	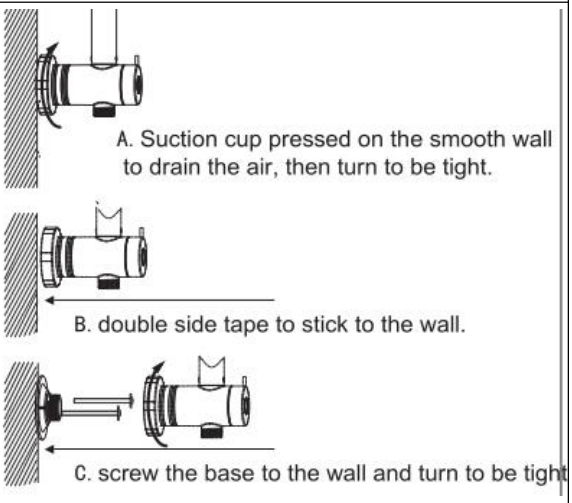

7. Use a Phillips screwdriver to tighten the screw inside the nut end.	8. Use the spin nut to rotate the connecting bend pipe clockwise trying to tighten it with a wrench, lest water leakage.
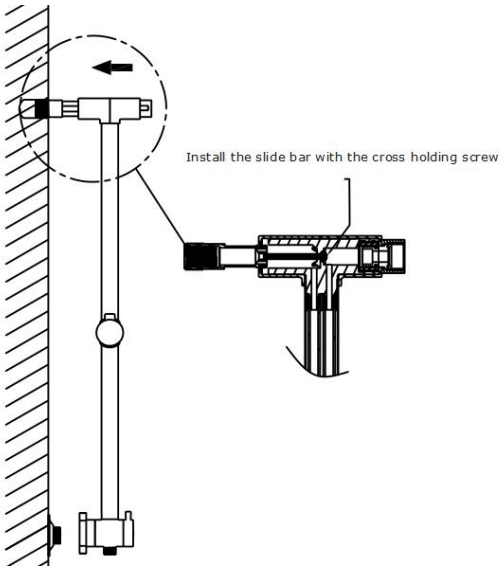	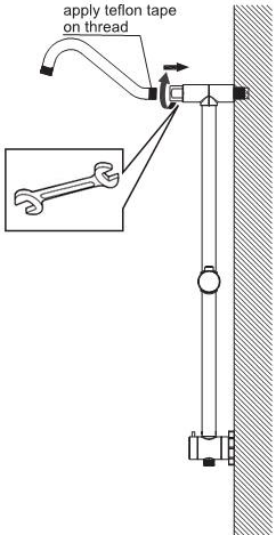
9. Install a gasket at the top spray ball, and then rotate the connecting bend pipe clockwise, and tighten it lest water leakage.	10. Install a gasket at the nut end of flexible hose, and then link the connector at the bottom of switching valve. Install a gasket at the speaker end of flexible hose, and then connect and tighten the hand shower in order to insert it into the outlet of sliding sleeve.
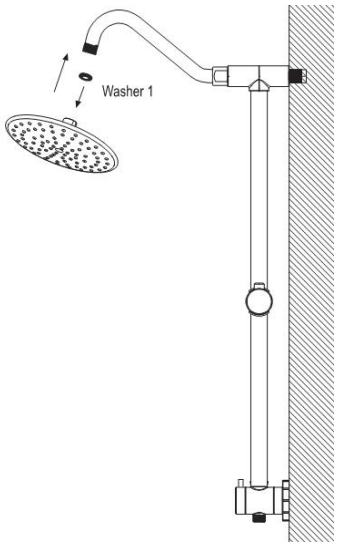	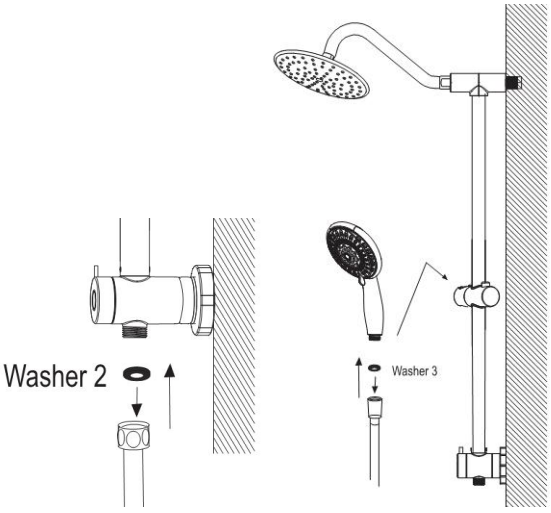

11.Installation complete.

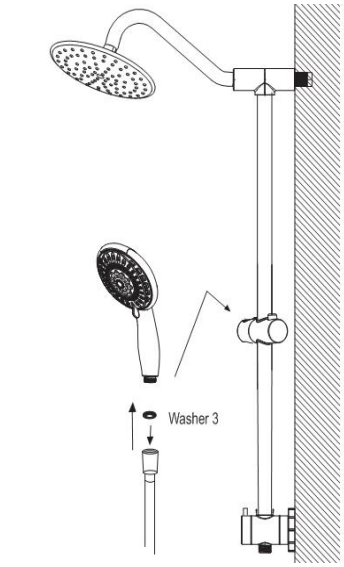

Do not apply both water restrictor and washer at the same time for handheld shower.

(2)

1.(as shown in the following image) Lifting lever rod, connector, lengthened connector.	2.A: If the connector on the wall is hollow, twine the PTFE tape on the screw thread of lengthened connector, and then revolve it clockwise into the current hole on the wall. Next, throw a short connector on the connector outside the wall, and press it inside from the front. B: If the connector on the wall is on the same plane with the wall, the lengthened connector is unnecessary. Twin the PTFE tape on the screw thread of short connector, and then revolve it clockwise into the current hole on the wall.

	A、 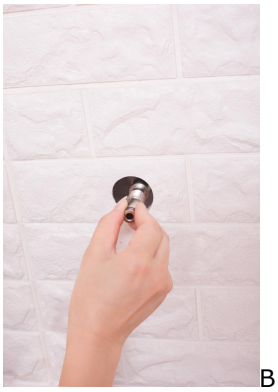 B、
3. Tighten the connector, or tighten it by means of a wrench lest water leakage, and then install the blind flange.	4. Revolve the sucker down from the switching valve body, and you can select A, B or C in accordance with requirements A: At the position 635mm below the connector vertically, wipe the wall clean, and then pin the sucker on the wall trying to exhaust air, so as to make it close to the wall free from falling off. B: At the position 635mm below the connector vertically, stick the double sided adhesive tape on the wall evenly. C: At the position 635mm below the connector vertically, use screws to lock the base on the wall.

5. Install the shell of lifting lever at the same side with sucker to the connector on the wall.	6. Aim the switching valve body at the sucker on the wall, and revolve the base of sucker clockwise until being tightened.
7. Use a Phillips screwdriver to tighten the screw inside the nut end.	8. Use the spin nut to rotate the connecting bend pipe clockwise trying to tighten it with a wrench, lest water leakage.
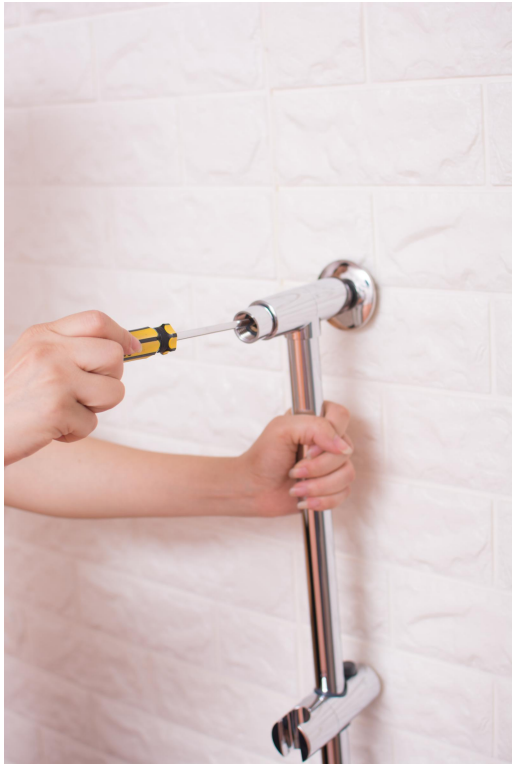	

9. Install a gasket at the top spray ball, and then rotate the connecting bend pipe clockwise, and tighten it lest water leakage.	10. Install a gasket at the nut end of flexible hose, and then link the connector at the bottom of switching valve. Install a gasket at the speaker end of flexible hose, and then connect and tighten the hand shower in order to insert it into the outlet of sliding sleeve.
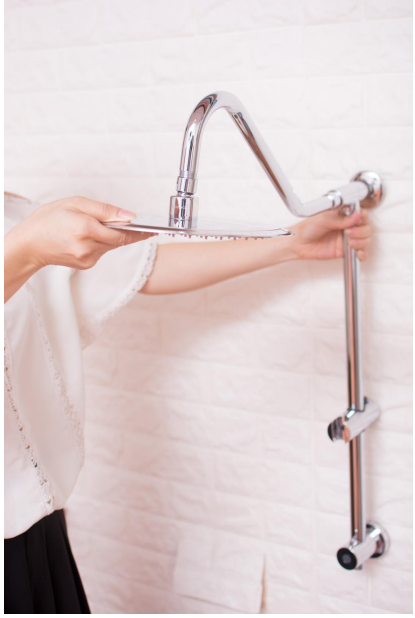	
11.Installation complete.	
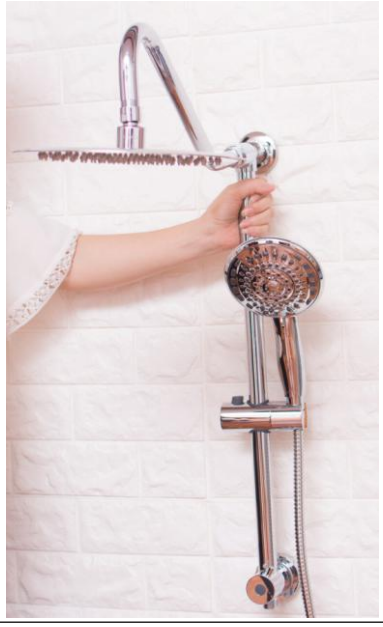	

Cleaning and Maintenance:

- Many active ingredients in cleaning agents such as ammonia, detergent powder and toilet cleaners may destroy the coating of the product. For best results, please use mild soap and dry thoroughly with a soft cloth.
- Do not use abrasive cleaning materials on Sarlai Products.
- Pease follow the steps below if you experience dirt blocking the flow of the water after some time.

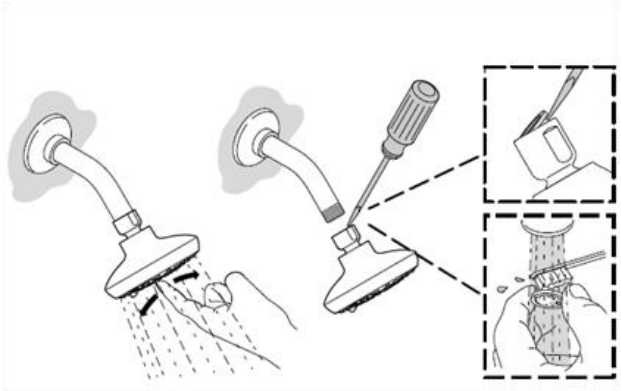

a. Turn on the water and poke the holes with your fingers to gently to loosen minerals and release any remaining sediments.
b. Turn off the water, remove the shower head and remove the mesh washer inside to clean with a small brush.

For questions regarding Sarlai Products, please contact:

- **Technical support:**
- **Customer Service Representative:**
- or visit