CARE INSTRUCTIONS

Thank you for choosing WINE RACK.
With little care and maintenance, the WINE RACK will provide you with comfort and enjoyment for many years to come!

- To clean panels, use clean water on a damp cloth.
- When assembling WINE RACK, please handle all thepanels and/or hardware with care to avoid any possibilities of damages and/or injuries.

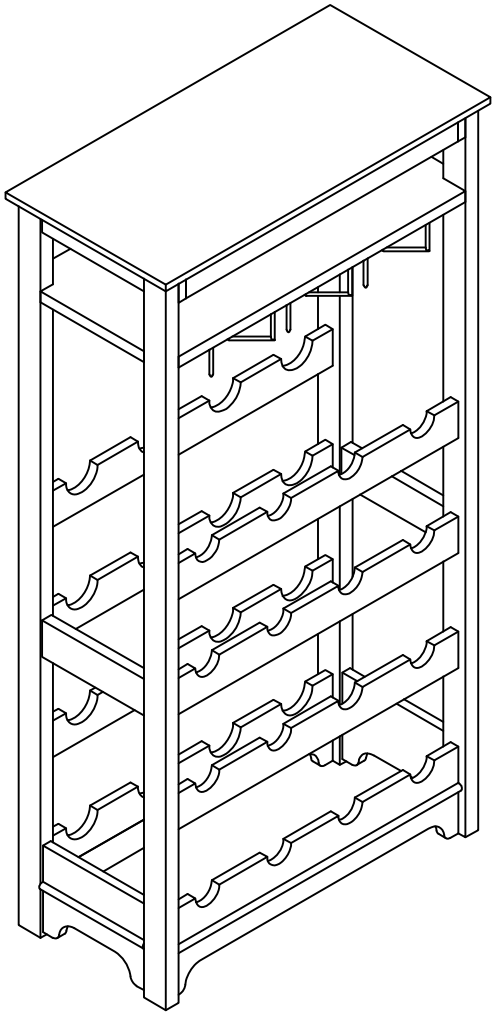

NOTE: Please read all instructions carefully before starting assembly.
Also, we recommend that the unit is fully assembled on a level surface.
Two people are recommended to assemble this product.

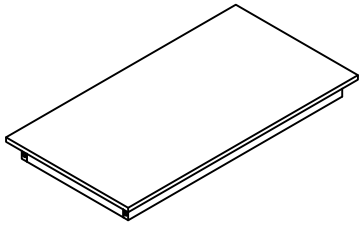

1 TOP X **1PC**

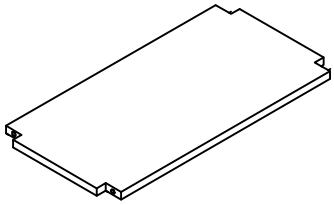

2 SHELF X **1PC**

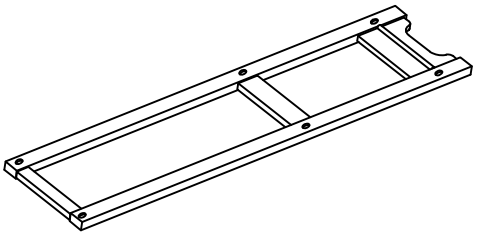

3 SIDE PANELS X **2PCS**

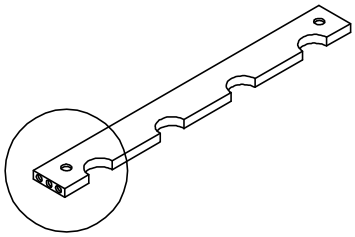

4 FRONT BRACE X **1PC**

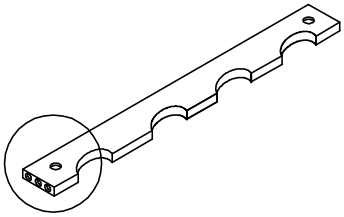

5 BACK BRACE X **1PC**

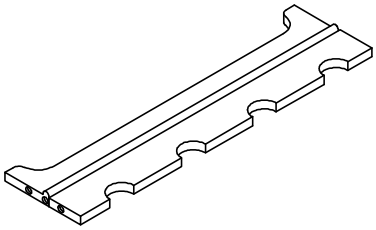

6 BOTTOM FRONT X **1PC**

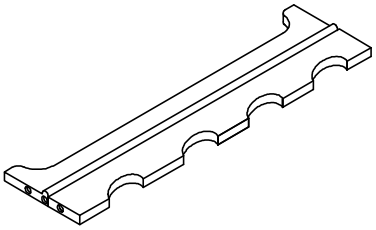

7 BOTTOM BACK X **1PC**

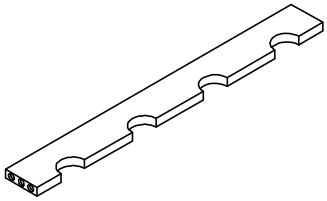

8 FRONT RACKS X **2PCS**

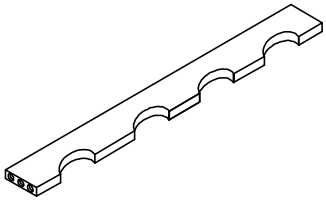

9 BACK RACKS X **2PCS**

NOTE: Please read all instructions carefully before starting assembly.
Also, we recommend that the unit is fully assembled on a level surface.
Two people are recommended to assemble this product.

HARDWARE

A	3X12	**8+1 PCS**
B	BRACE	**4+1 PCS**
C		**1 PC**
D	6X38	**12+1 PCS**
E	LOCKS	**12+1 PCS**
F	DOWEL	**36+2 PCS**
G		**12+1 PCS**
H	CAP	**12+1 PCS**

NOTE: Please read all instructions carefully before starting assembly.
Also, we recommend that the unit is fully assembled on a level surface.
Two people are recommended to assemble this product.

1

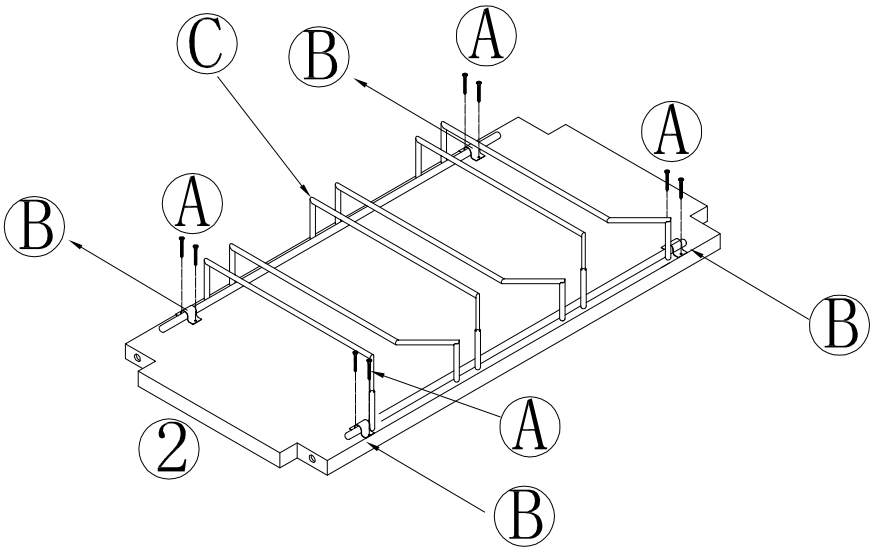

2

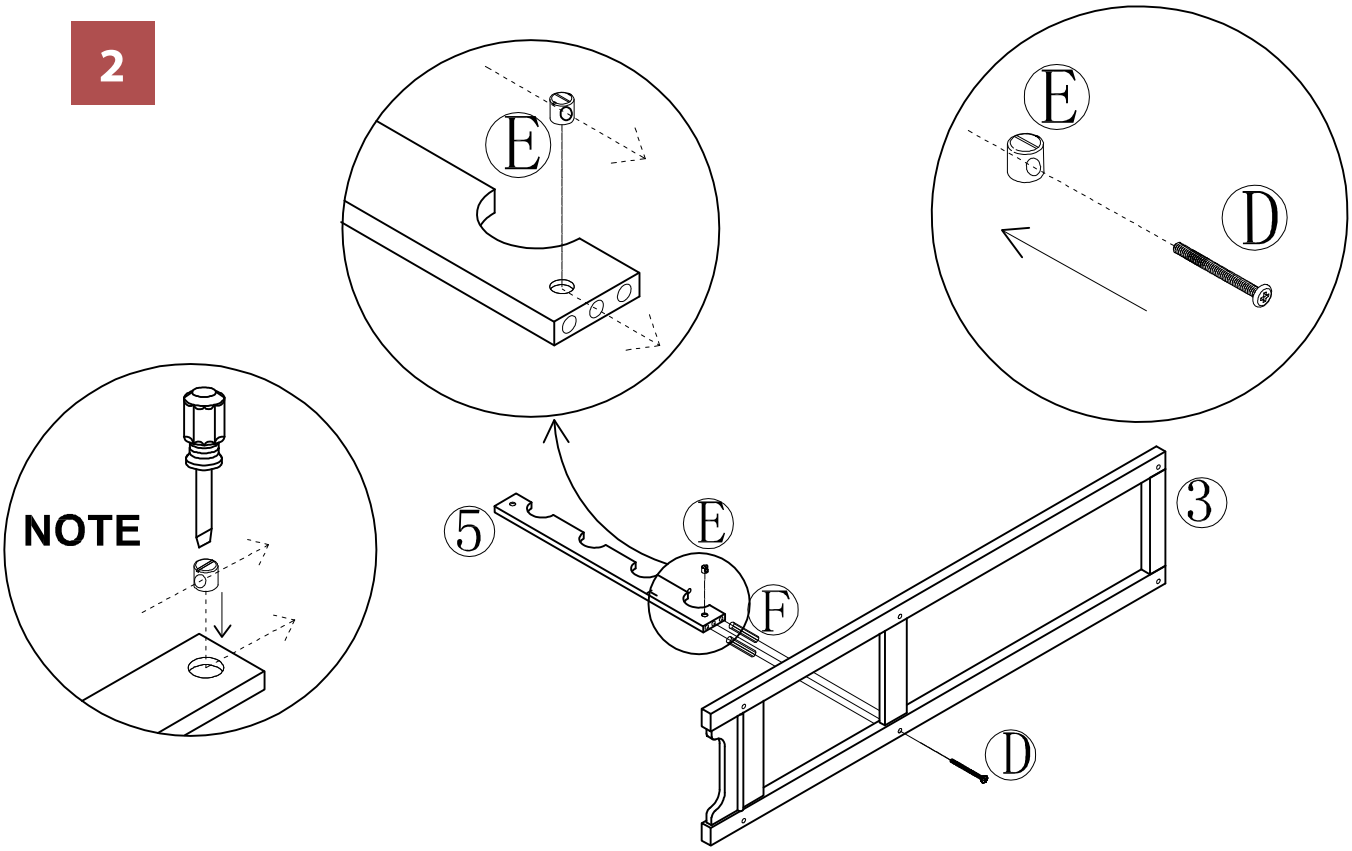

NOTE: Please read all instructions carefully before starting assembly.
Also, we recommend that the unit is fully assembled on a level surface.
Two people are recommended to assemble this product.

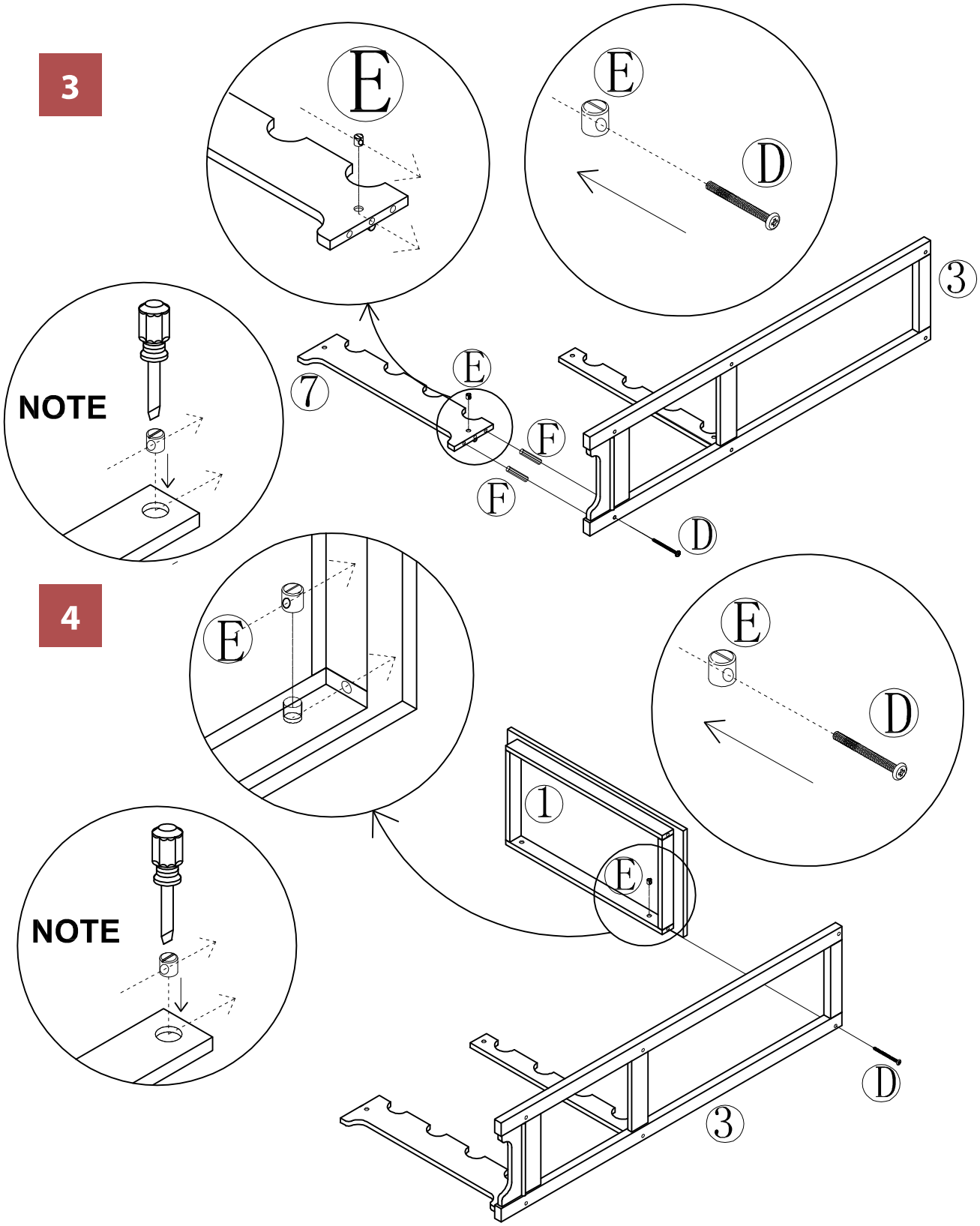

NOTE: Please read all instructions carefully before starting assembly.
Also, we recommend that the unit is fully assembled on a level surface.
Two people are recommended to assemble this product.

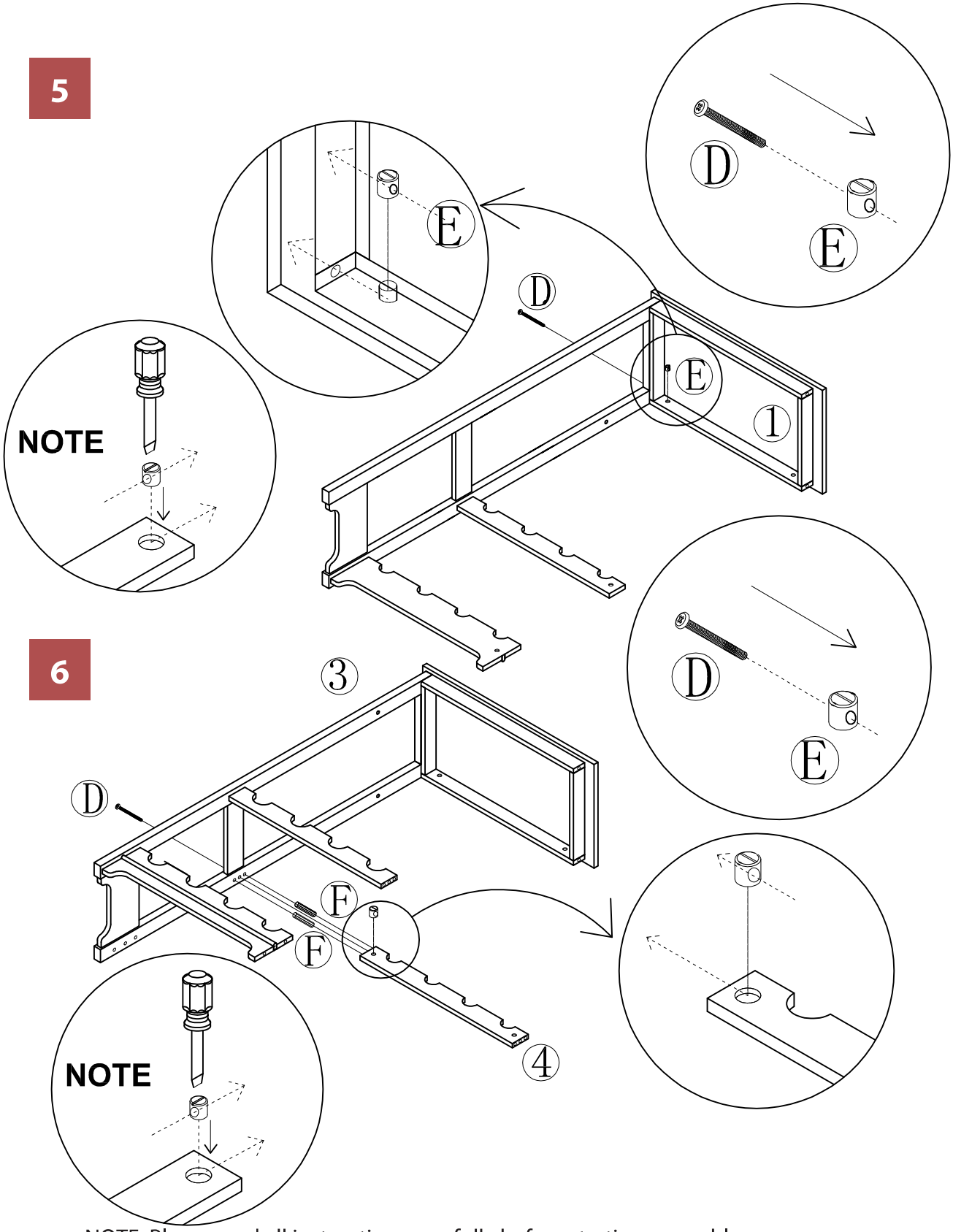

NOTE: Please read all instructions carefully before starting assembly.
Also, we recommend that the unit is fully assembled on a level surface.
Two people are recommended to assemble this product.

7

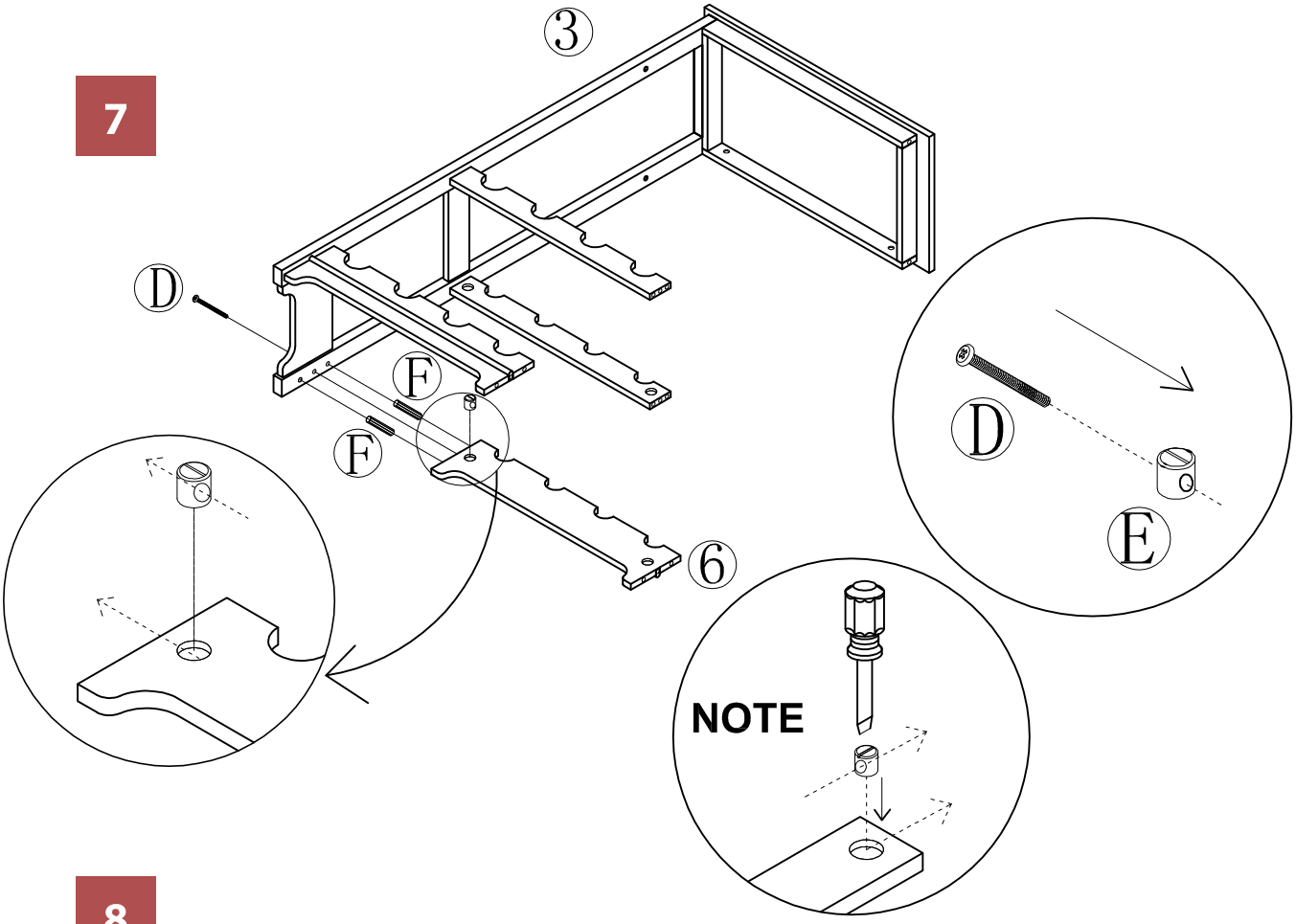

8

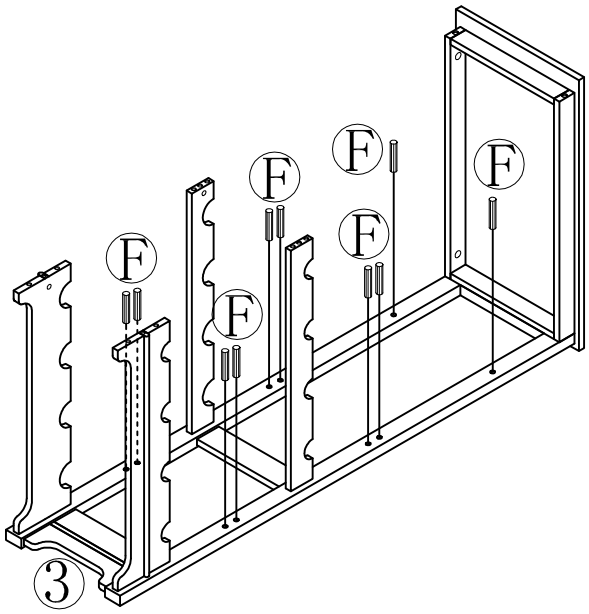

NOTE: Please read all instructions carefully before starting assembly.
Also, we recommend that the unit is fully assembled on a level surface.
Two people are recommended to assemble this product.

9

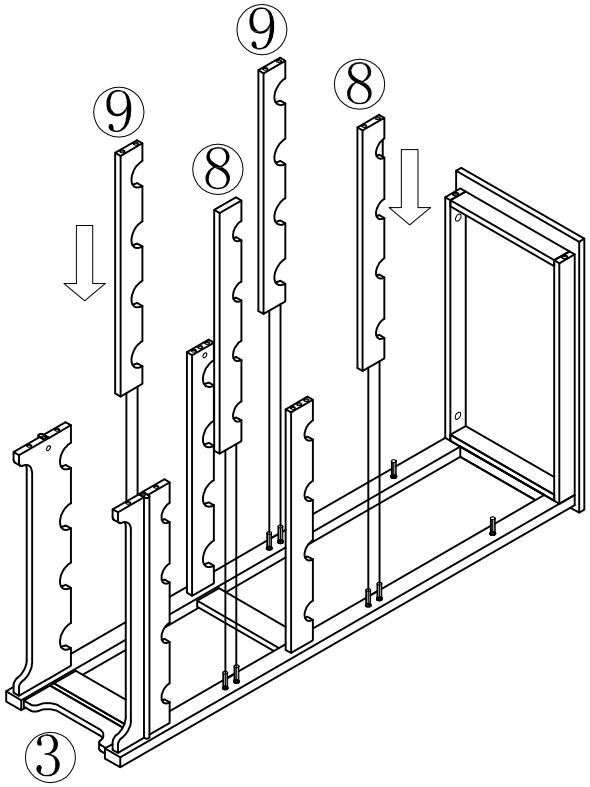

10

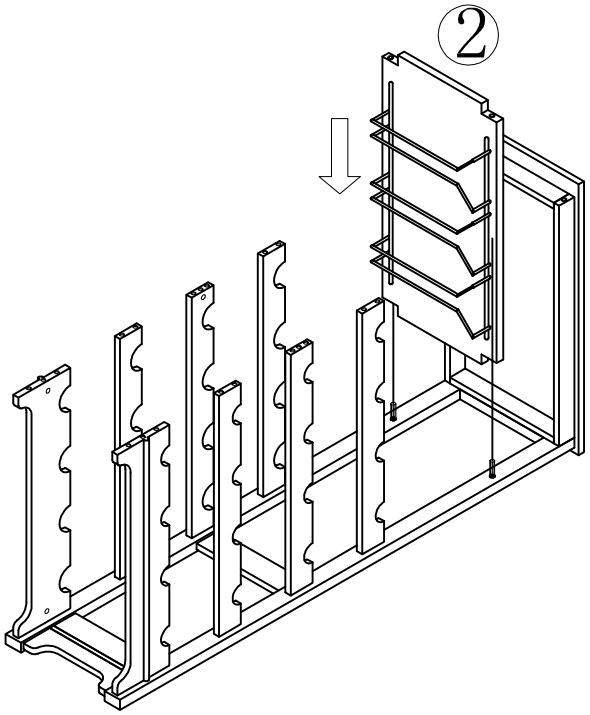

NOTE: Please read all instructions carefully before starting assembly.
Also, we recommend that the unit is fully assembled on a level surface.
Two people are recommended to assemble this product.

11

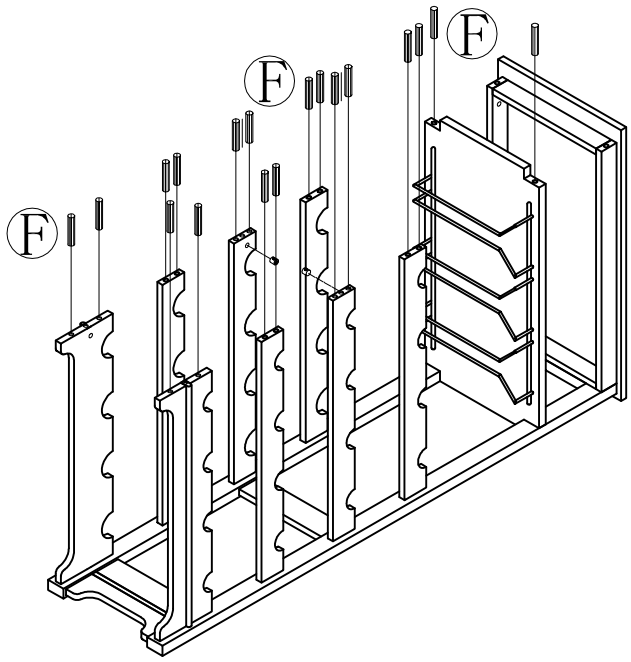

12

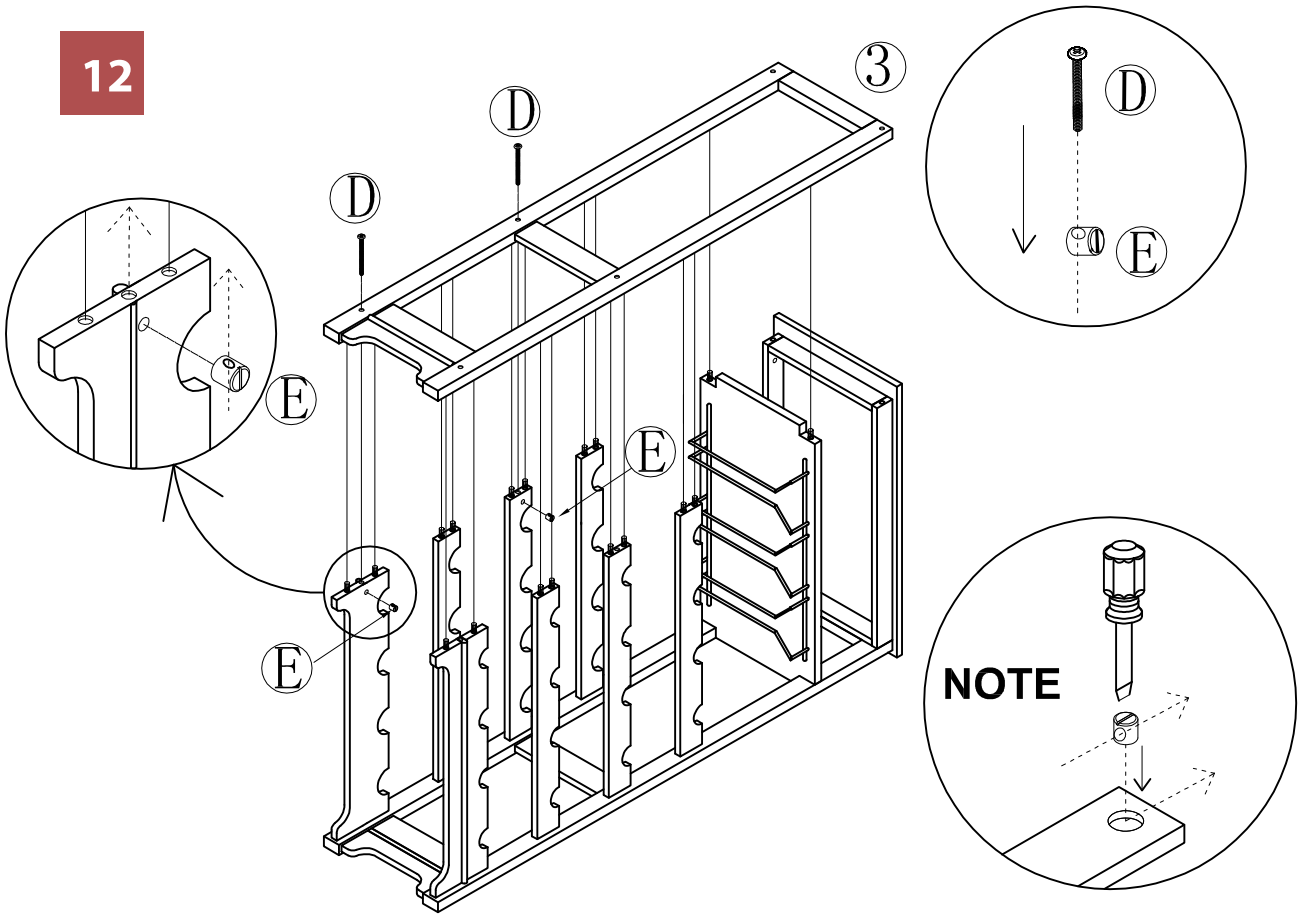

NOTE: Please read all instructions carefully before starting assembly.
Also, we recommend that the unit is fully assembled on a level surface.
Two people are recommended to assemble this product.

13

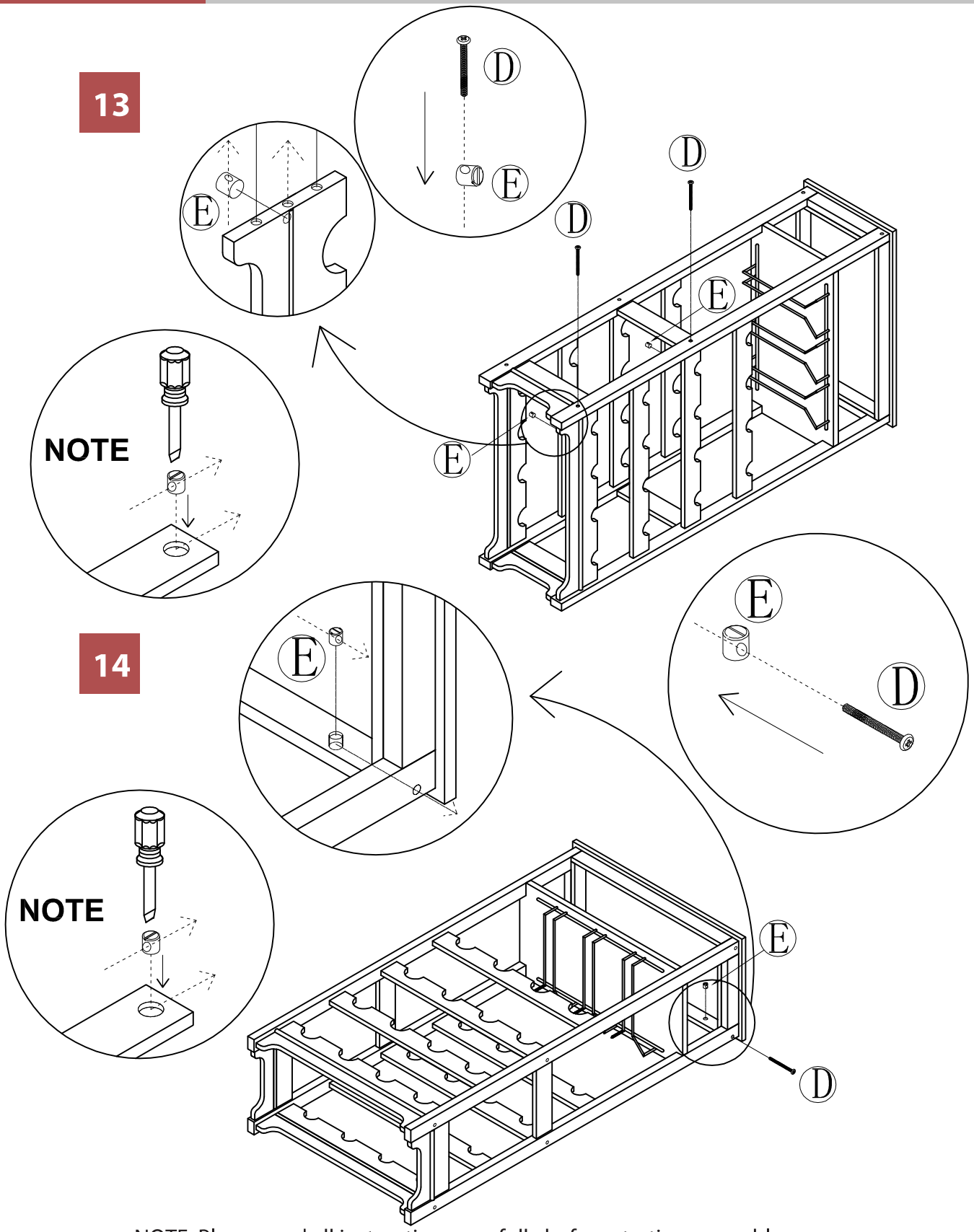

14

NOTE: Please read all instructions carefully before starting assembly.
Also, we recommend that the unit is fully assembled on a level surface.
Two people are recommended to assemble this product.

15

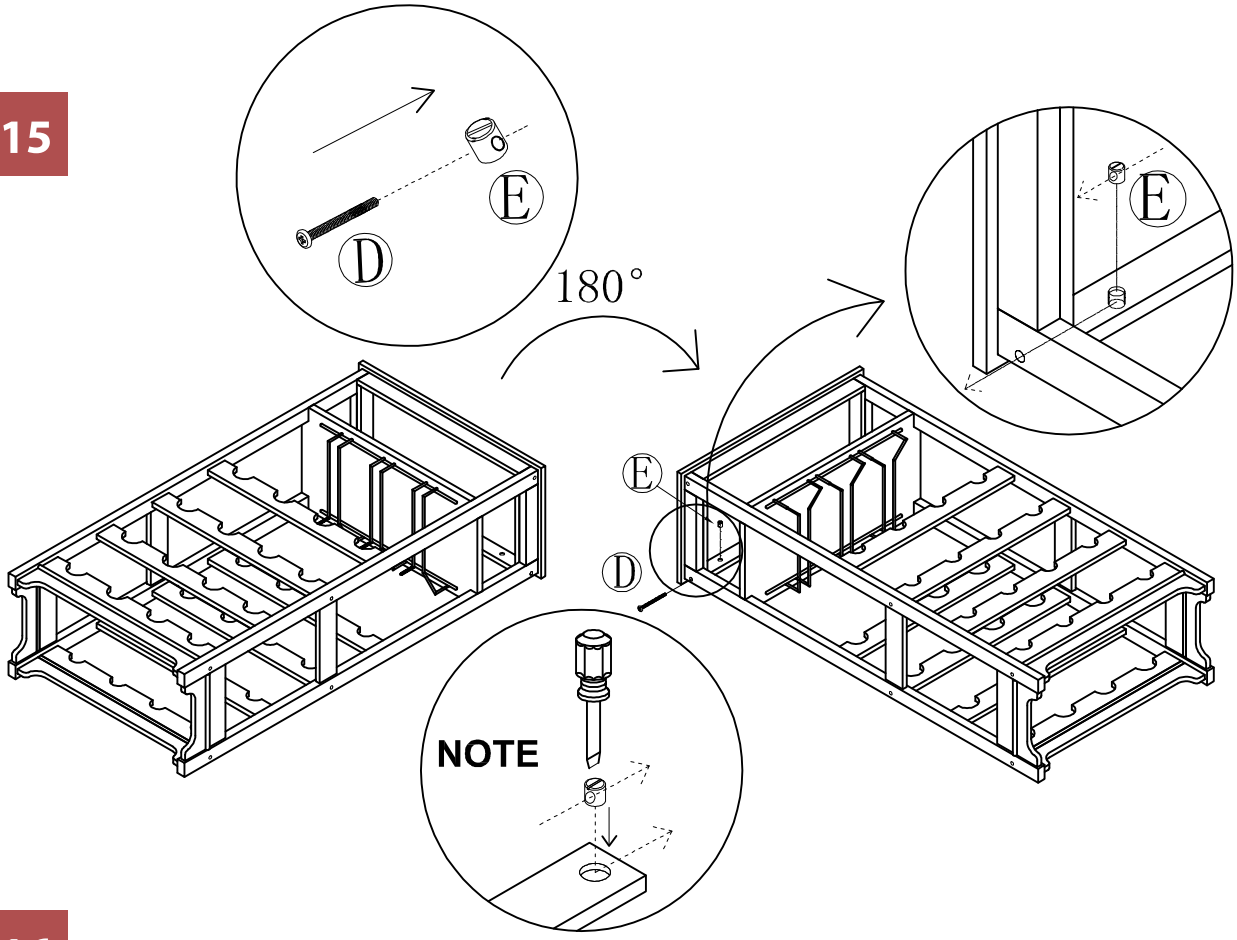

16

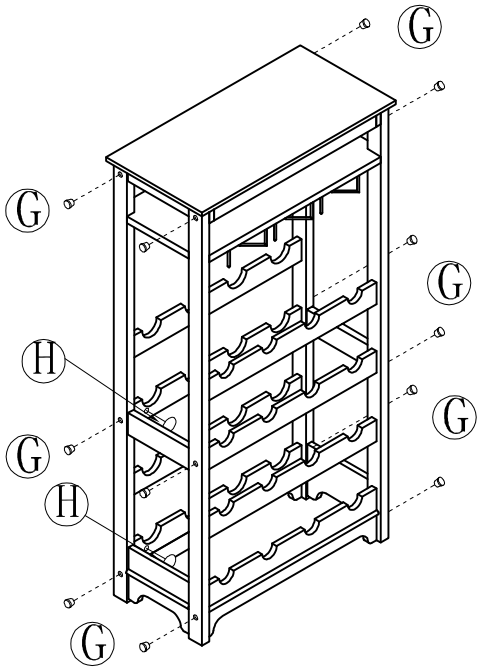

NOTE: Please read all instructions carefully before starting assembly.
Also, we recommend that the unit is fully assembled on a level surface.
Two people are recommended to assemble this product.

Please check contents before assembly. If any items are missing or damaged, do not take the unit back to the store.

NOTE: Please read all instructions carefully before starting assembly.
Also, we recommend that the unit is fully assembled on a level surface.
Two people are recommended to assemble this product.