ASSEMBLY INSTRUCTION

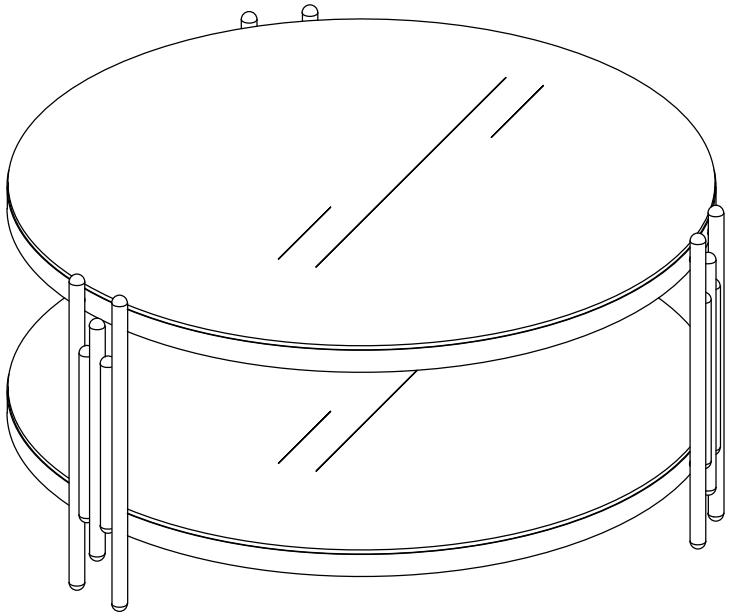

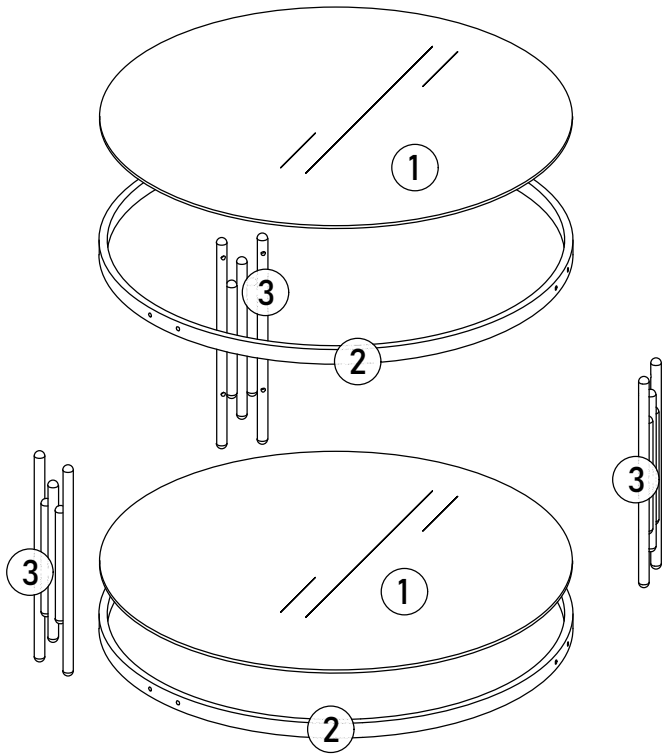

1 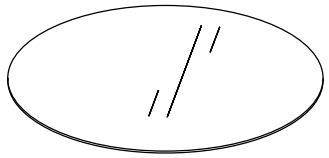 X2	2 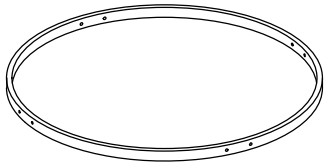 X2	3 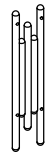 X3
A 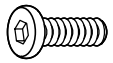 M6*18mm X12+1	B  M4 X1	

1

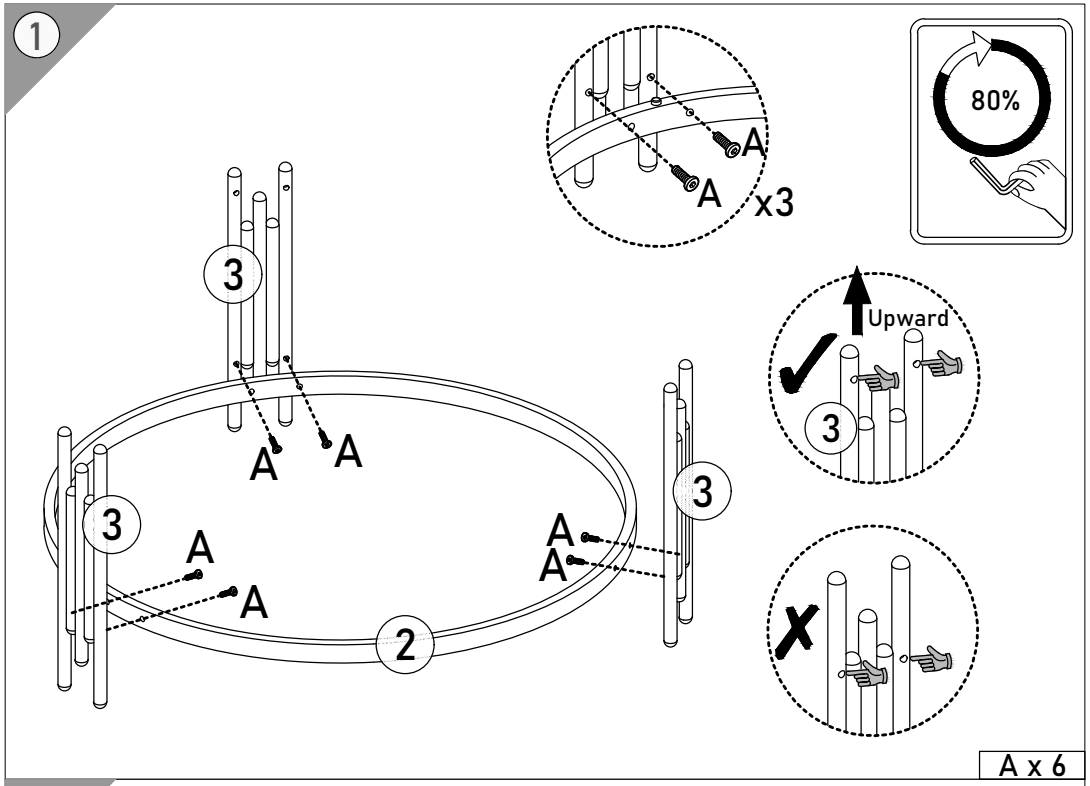

A x 6

2

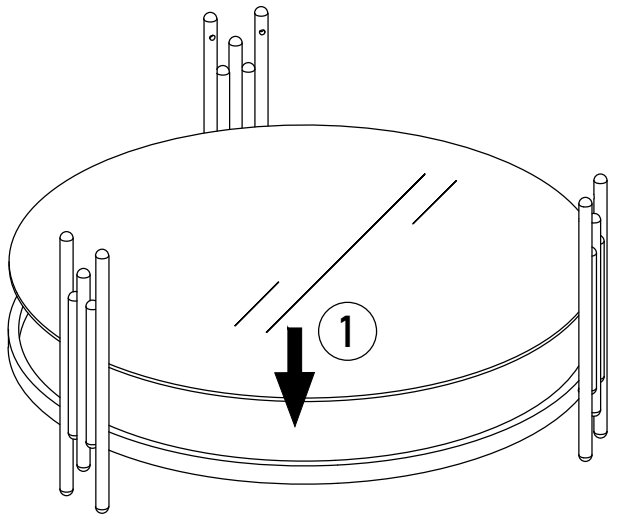

3

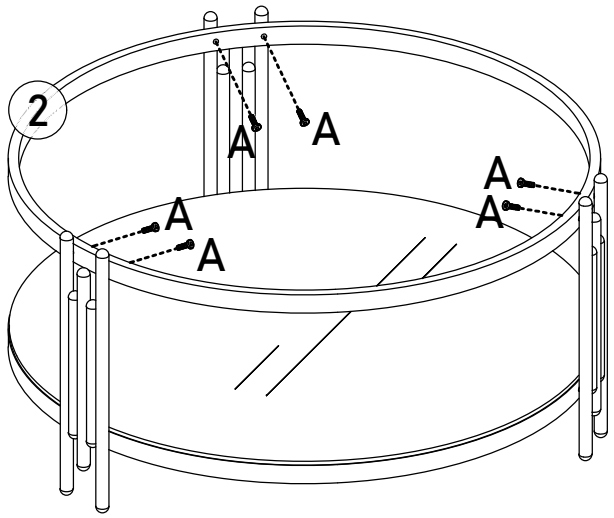

A x 6

4

