INSTRUCTION MANUAL

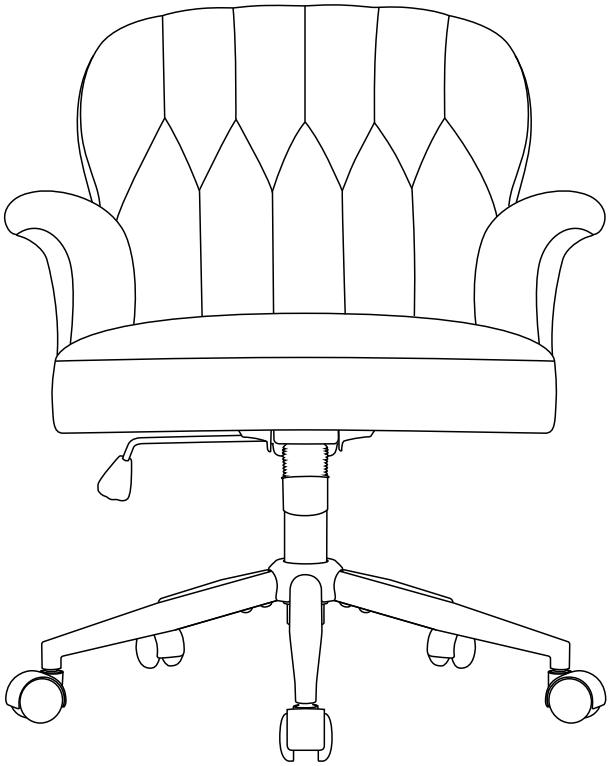

Read over the manual before assembly, and two people are suggested to complete.

LEISURE CHAIR

D08F015A

BEFORE INSTALLATION

1. Read each step carefully before starting. Ensure each step followed in correct order, or you may meet assembly problem.
2. Please check if there are missing parts from the package before beginning. Should there be any issues, please don't hesitate to drop us an email and we'll help you out ASAP.
3. Do not use power tools to assemble your furniture which may scratch or damage the parts.
4. Our chairs are handmade, and there will be 10% sampling installation test beofore the factory, so if there are installed signs or marks on the the screws or screw holes, please understand that it is not second-hand product and have no effect on use.
5. It is normal for the metal legs products to make noise during use.
6. It is recommended to wear clean gloves during installation to avoid any injury and prevent the oil stains of the parts from affecting the chair surface.
7. During the installation process, please do not tighten the screws together until all of them are aligned to avoid assembly problem.

ASSEMBLY COMPLETE!

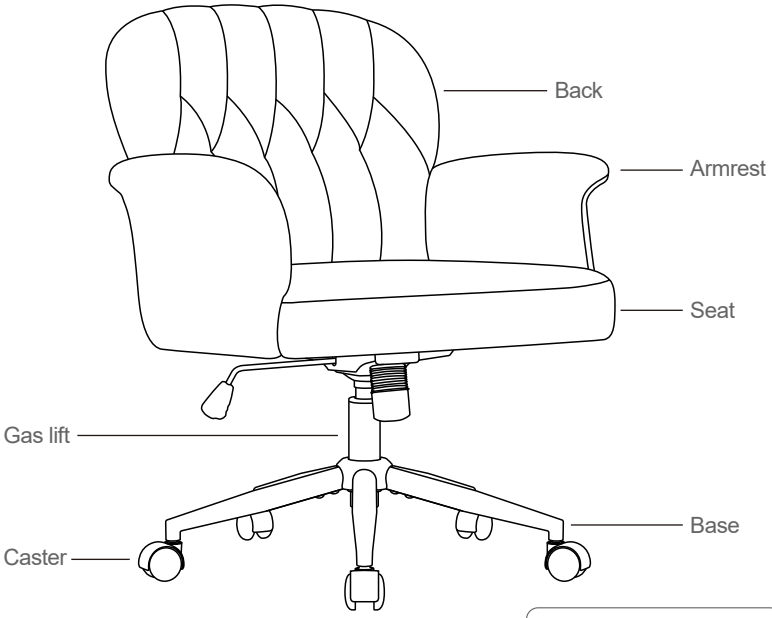

To protect our environment, please dispose of all packaging thoughtfully.

Please make sure that you have all the following parts listed before installation.
If you find that something is missing, please stop assembling and contact us.

1-2 PERSON ASSEMBLY

APPROXIMATELY 10-30 MIN ASSEMBLY

INCLUDED PARTS

A

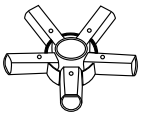

1PC

B

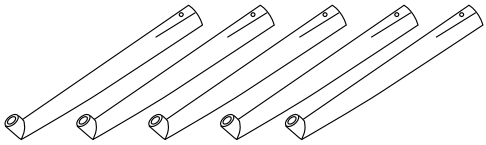

5PCS

C

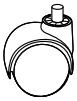

5PCS

D



1PC

E

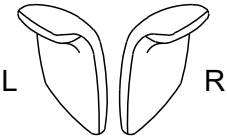

2PCS

F

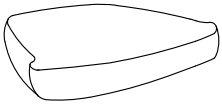

1PC

G

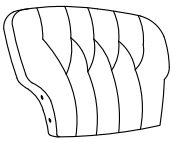

1PC

H

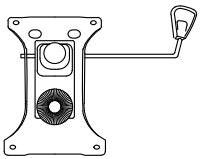

1PC

HARDWARE

I



M6x16mm (5PCS)

J



M8X35mm (8PCS)

K



M6x20mm (4PCS)

L



1PC (M6)





https://quefairedemesdechets.fr

INSTRUCTION

Step 1

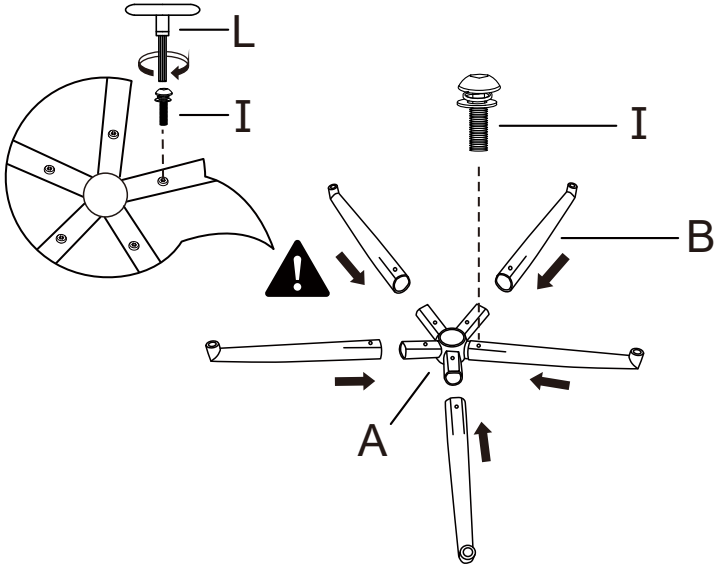

A x 1 / B x 5 / I x 5 (M6 X 16 mm)

Step 2

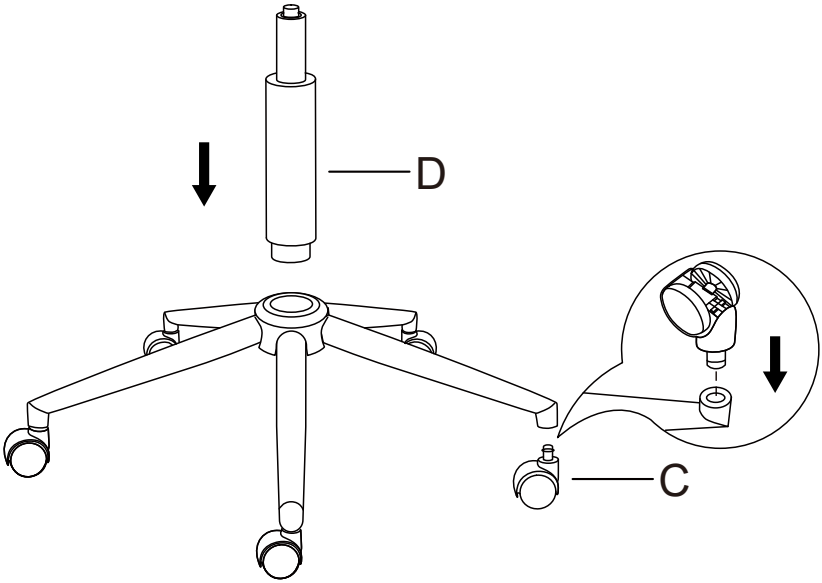

C x 5 / D x 1

INSTRUCTION

Step 3

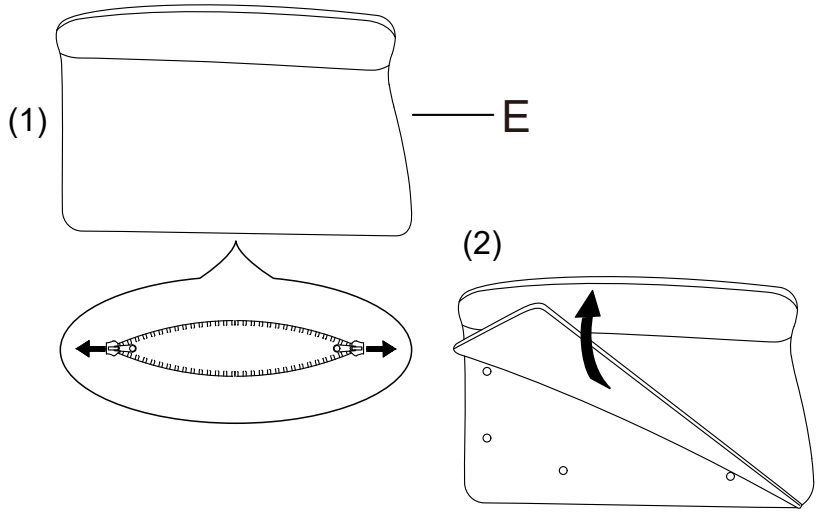

E x 2

Step 4

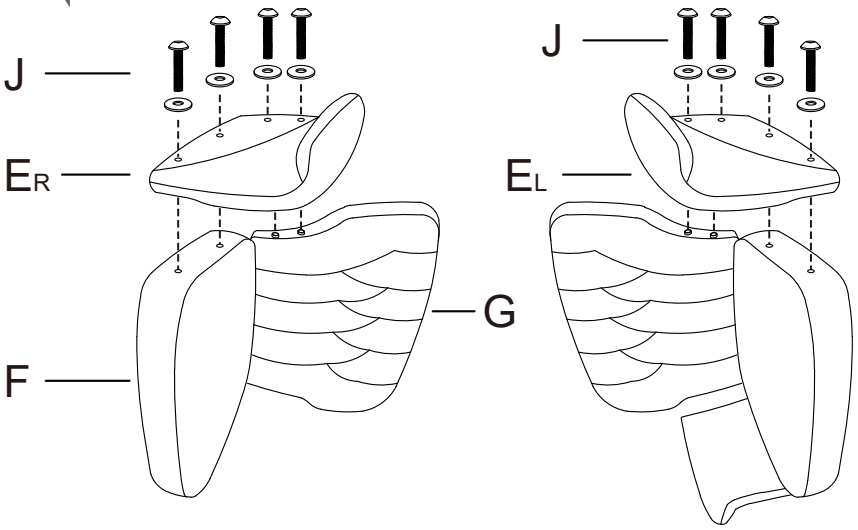

E x 2 / F x 1 / G x 1 / J x 8 (M8 X 35mm)

INSTRUCTION

Step 5

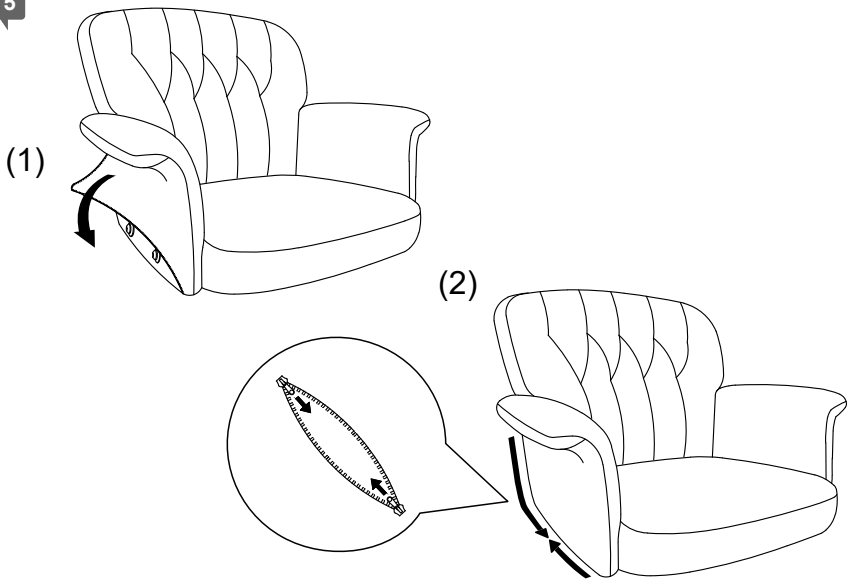

Step 6

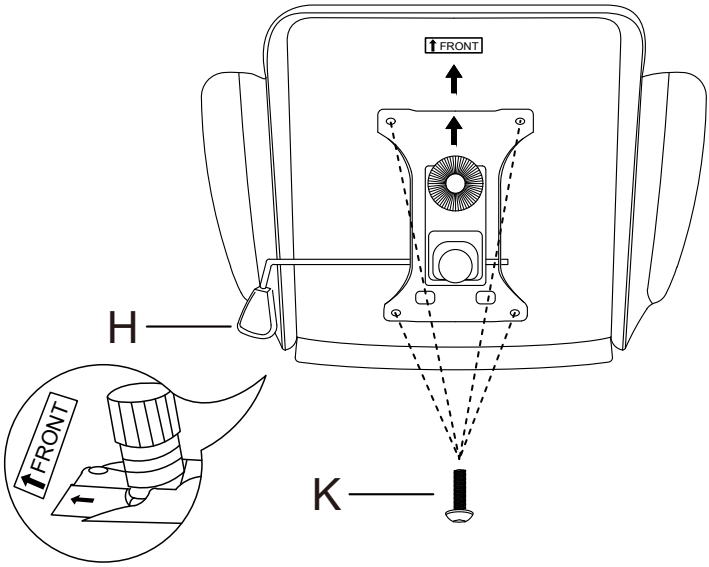

H x 1 / K x 4 (M6 X 20mm)

INSTRUCTION

Step 7

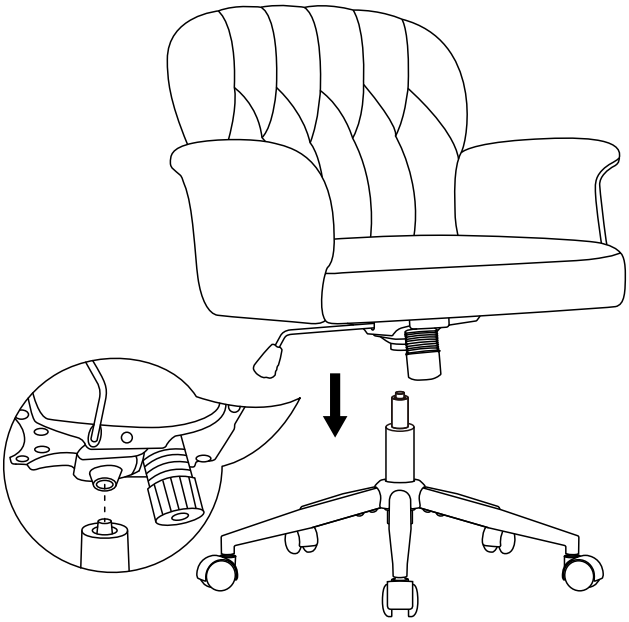

Step 8

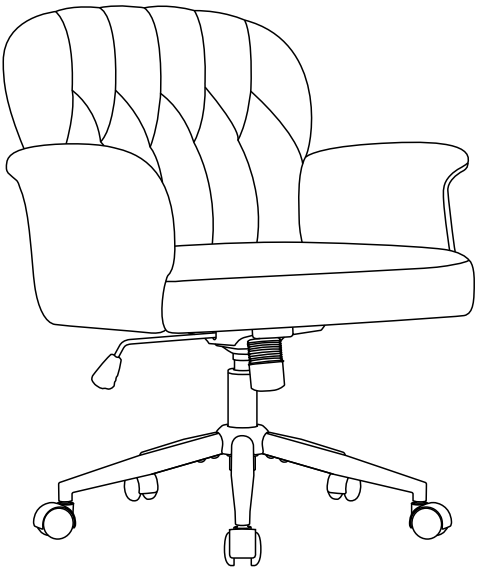

WARRANTY-SAFETY AND MAINTENANCE

- **UK This chair is designed for sitting only.**
  1. The plastic parts will crack if the chair is directly exposed to sunlight.
  2. Do not use corrosive cleaner on the chair.
  3. Do not use the chair unless all bolts and screws are firmly secured.
  4. Do not contact with sharp objects to avoid piercing the upholstery.
  5. Please check all bolts and screws every 3 months to ensure they are tight.
  6. Do not heat or disassemble the gas cylinder. Only a professional technician should remove or replace the gas cylinder and fitting pieces.
  7. The wheels of this office chair are suitable for most kinds of flooring (ceramic tile floor, wooden floor, PVC floor, etc.).

- **DE Dieser Stuhl ist nur zum Sitzen gedacht**
  1. Wenn der Stuhl direktem Sonnenlicht ausgesetzt wird, werden die Kunststoffteile Risse bekommen.
  2. Verwenden Sie keine ätzenden Reinigungsmittel auf Stühlen.
  3. Benutzen Sie den Stuhl nur, wenn alle Bolzen und Schrauben sicher befestigt sind.
  4. Vermeiden den Kontakt mit scharfen Gegenständen, die das Gewebe durchstechen können.
  5. Überprüfen Sie alle 3 Monate alle Bolzen und Schrauben auf festen Sitz.
  6. Erhitzen Sie die Gasfeder nicht und nehmen Sie sie nicht auseinander. Nur ein professioneller Techniker sollte die Gasfeder und die dazugehörigen Teile ausbauen oder ersetzen.
  7. Die Räder dieses Bürostuhls sind für die meisten Bodenbeläge geeignet (Fliesenboden, Holzboden, PVC-Boden, etc.).

- **FR Cette chaise est conçue pour s'asseoir uniquement.**
  1. Si la chaise est directement exposée au soleil, les pièces en plastique se fissureront.
  2. N'utilisez pas de détergents corrosifs sur la chaise.
  3. N'utilisez pas la chaise, à moins que tous les boulons et vis ne soient fermement fixés.
  4. Évitez tout contact avec des objets pointus pour éviter de percer le tissu.
  5. Vérifiez tous les boulons et vis tous les 3 mois pour assurer qu'ils sont bien serrés.
  6. Ne chauffez pas et ne démontez pas le vérin. Seul un technicien professionnel doit retirer ou remplacer le vérin et les pièces.
  7. Les roulettes de cette chaise de bureau conviennent à la plupart des sols (sol en carreaux de céramique, sol en bois, sol en PVC, etc.).

- **ES Esta silla está diseñada sólo para sentarse.**
  1. Las piezas de plástico se agrietarán si la silla se expone directamente bajo el sol.
  2. No use limpiadores cáusticos en la silla.
  3. No utilice la silla a menos que todos los pernos y tornillos estén bien sujetos.
  4. Evitar el contacto con objetos punzantes que puedan dañar el tejido.
  5. Revise todos los tornillos y pernos cada 3 meses para asegurarse de que están bien apretados.
  6. No caliente ni desmonte la bombona de gas. Sólo un técnico profesional debe desmontar o sustituir el cilindro de gas y los accesorios.
  7. Las ruedas de esta silla de oficina son adecuadas para la mayoría de los suelos (suelo de baldosas de cerámica, suelo de madera, suelo de PVC, etc.).

- **IT Questa sedia è progettata solo per sedersi**
  1. Se la sedia è esposta direttamente al sole, le parti in plastica si romperanno.
  2. Non utilizzare detergenti caustici sulle superfici delle sedie
  3. Non utilizzare la sedia a meno che tutti i bulloni e le viti non siano saldamente fissati.
  4. Evitare il contatto con oggetti appuntiti che potrebbero perforare il tessuto.
  5. Controllare tutti i bulloni e le viti ogni 3 mesi per assicurarsi che siano ben stretti.
  6. Non riscaldare o smontare la bombola del gas. La rimozione o la sostituzione della bombola del gas e dei raccordi deve essere effettuata esclusivamente da un tecnico professionista.
  7. Le ruote di questa sedia da ufficio sono adatte alla maggior parte dei tipi di pavimento (pavimento in piastrelle della ceramica, pavimento in legno, pavimento in PVC, ecc.)

- **JP このチェアは、座ることだけを目的に設計されています.**
  1. 椅子が直射日光にさらされるとプラスチックの部品が割れます.
  2. シンナー系溶剤、酸・アルカリ性洗剤の使用は避けてください.
  3. ネジのゆるみがないか、締め具合を確認してください.
  4. 鋭い物体との接触を避け，織物を突き刺されないようにしてください.
  5. 3ヶ月毎を目安に、ボルトやネジを定期的に締め直してください.
  6. ガスシリンダーを加熱したり分解したりしないでください. プロの技術者のみが部品を取り外したり交換したりする必要があります.
  7. このオフィスチェアのキャスターは、ほとんどの床（タイル床、木床、PVC床など）に適しています.