ASSEMBLY INSTRUCTIONS

IMPORTANT
PLEASE READ BEFORE YOU CONTINUE FURTHER

ASSEMBLY PREPARATION

1. Remove all packaging materials, staples, and packing straps from the carton.
2. Refer to the Parts List and Hardware List to ensure all parts and hardware are correct before starting assembly.
3. Place all wooden parts on a clean, flat, and soft surface (e.g., carpet or rug) to prevent scratches and damage.

SAFETY PRECAUTIONS

1. KEEP ALL HARDWARE PARTS OUT OF REACH OF CHILDREN.
2. DISPOSE OF PLASTIC PACKAGING MATERIALS IMMEDIATELY TO AVOID ANY RISK OF SUFFOCATION TO CHILDREN AND ANIMALS.

TIPS FOR ASSEMBLY

1. Ensure ample space for assembly and position the area close to where the product will be placed.
2. Assemble the product on a surface that will not scratch or damage the exterior gloss or finishing of the furniture.
3. Identify all parts, hardware, and quantities required for each step.
4. Avoid over-tightening any fittings during assembly, as this may cause damage.
5. Use hand tools only--DO NOT USE POWER TOOLS TO ASSEMBLE THIS PRODUCT.
6. Always assemble the product on a flat, level surface.
7. Assembly requires two or more people--do not attempt to assemble the product alone, as there is a risk of injury.
8. Do not sit or stand on the partially assembled product. Use the product only for its intended purpose.

WARNINGS

1. This product is intended for indoor and household use only, and is not suitable for commercial use.
2. Two people are required to move the table. Do not move it alone or drag the table.
3. Do not stand, sit, or climb on the table.
4. Hardware may loosen over time. Regularly check all connections and re-tighten as needed.
5. If moving table, two people required to move it. Do not move it alone, and do not drag the table.



- DO NOT STAND ON THE TABLE
- DO NOT DRAG THE TABLE

Please make sure you have all these parts before you start.

PART LIST

Ⓐx 1pc 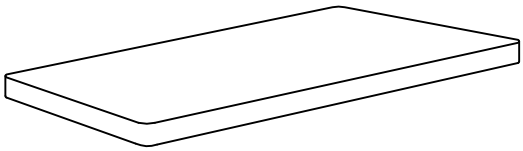	Ⓑx 2pcs 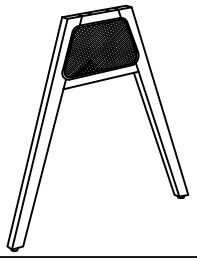
Ⓒx 1pc 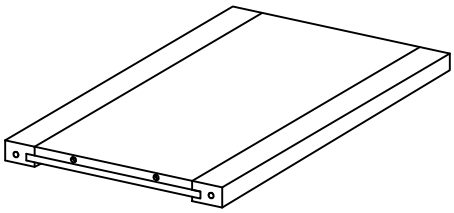	Ⓓx 1pc 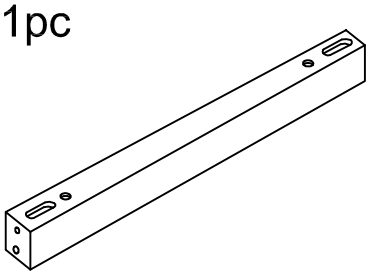

HARDWARE LIST (TABLE)

①x (12pcs +1)	②x 1pc	③x (8pcs +1)
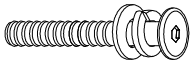 JCBC M6 x 50mm + S/W M6 + F/W M6 x 13mm	 ALLEN KEY M4 (BALL SHAPE)	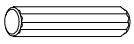 DOWEL M8 x 30mm

(Extra Hardware for spare use)

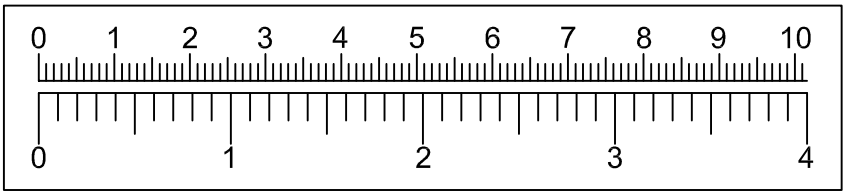

STEP 1

3	 DOWEL M8 x 30mm	6PCS

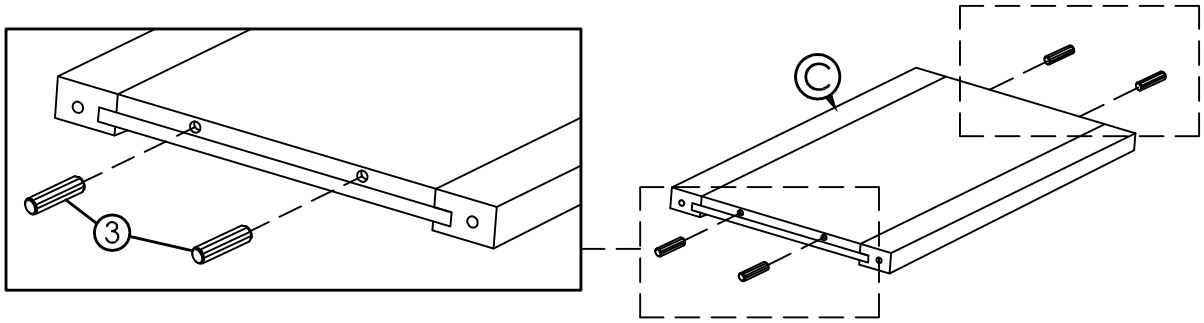

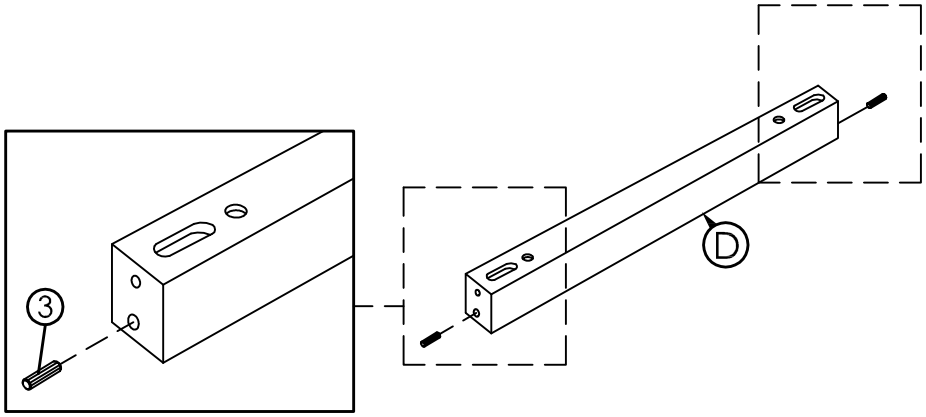

STEP 2

1	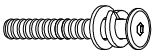 JCBC M6 x 50mm + S/W M6 + F/W M6 x 13mm	1PC

DO NOT fully tighten bolts (leave slightly loose).

STEP 3

1	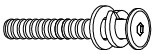 JCBC M6 x 50mm + S/W M6 + F/W M6 x 13mm	2PCS

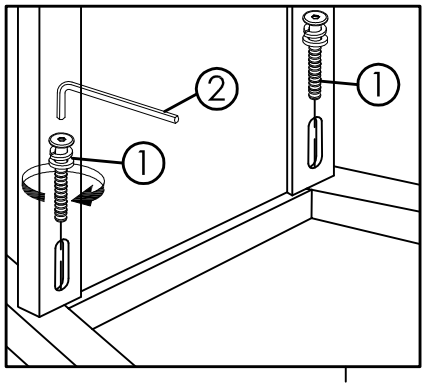

DO NOT fully tighten bolts (leave slightly loose).

Please make sure JCBC hole face HERE

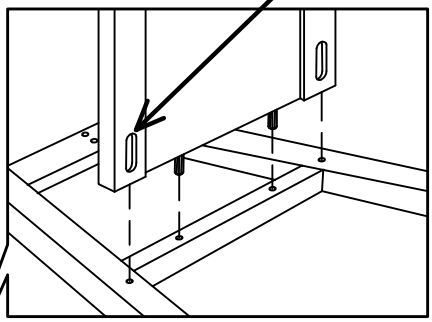

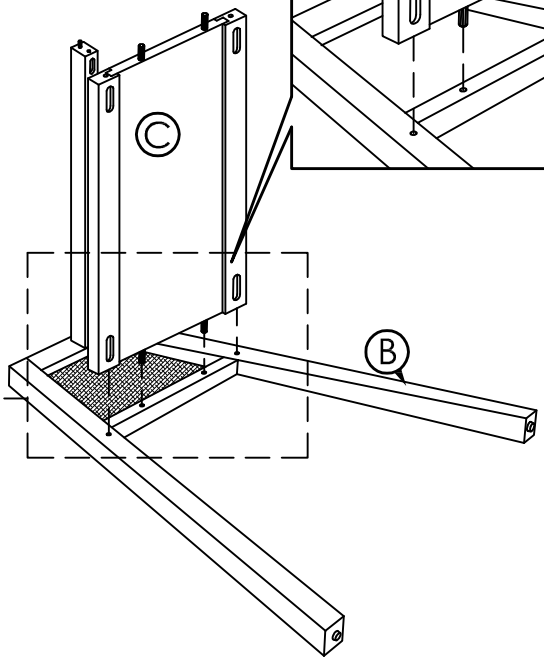

STEP 4

1	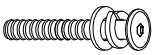 JCBC M6 x 50mm + S/W M6 + F/W M6 x 13mm	3PCS

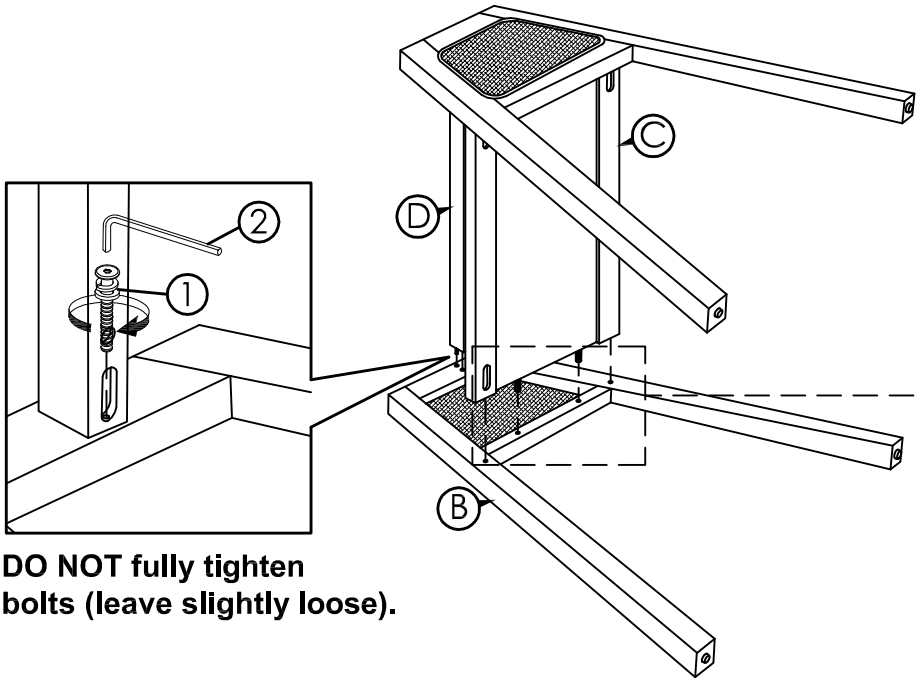

DO NOT fully tighten bolts (leave slightly loose).

DO NOT fully tighten bolts (leave slightly loose).

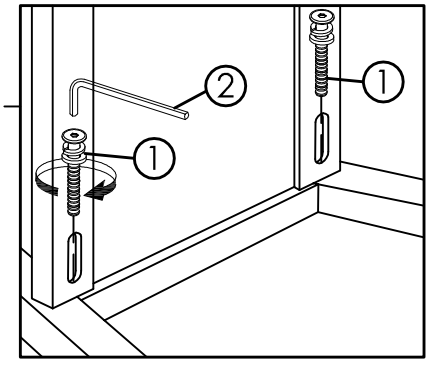

STEP 5

3	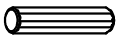 DOWEL M8 x 30mm	2PCS

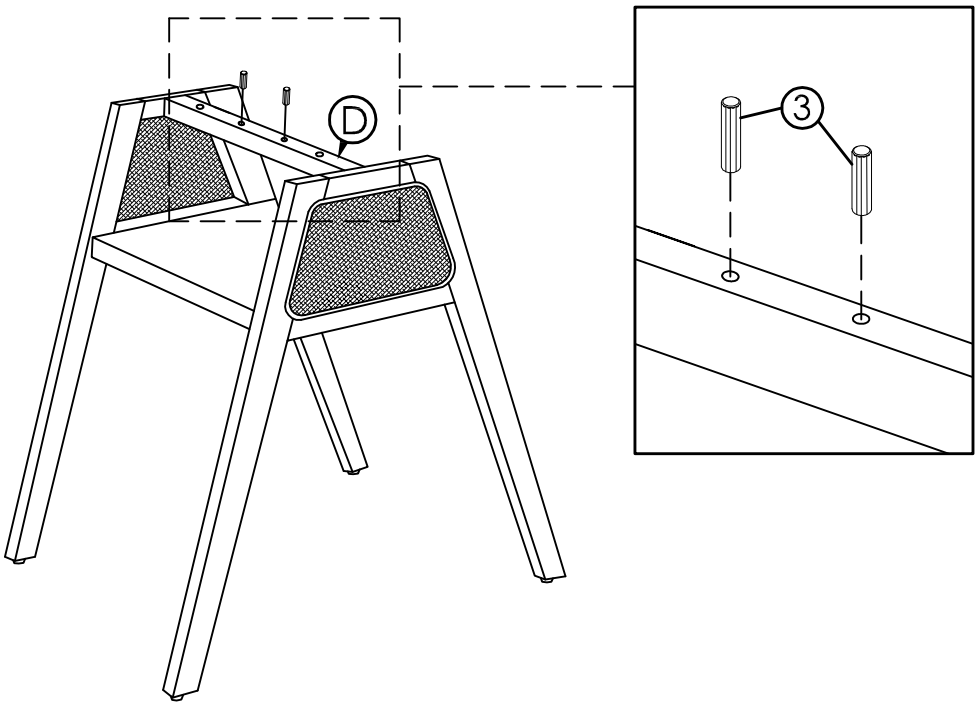

STEP 6

Fully tighten ALL the bolts from Step 1 to Step 4, but do not over-tighten.

1	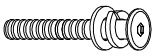 JCBC M6 x 50mm + S/W M6 + F/W M6 x 13mm	6PCS

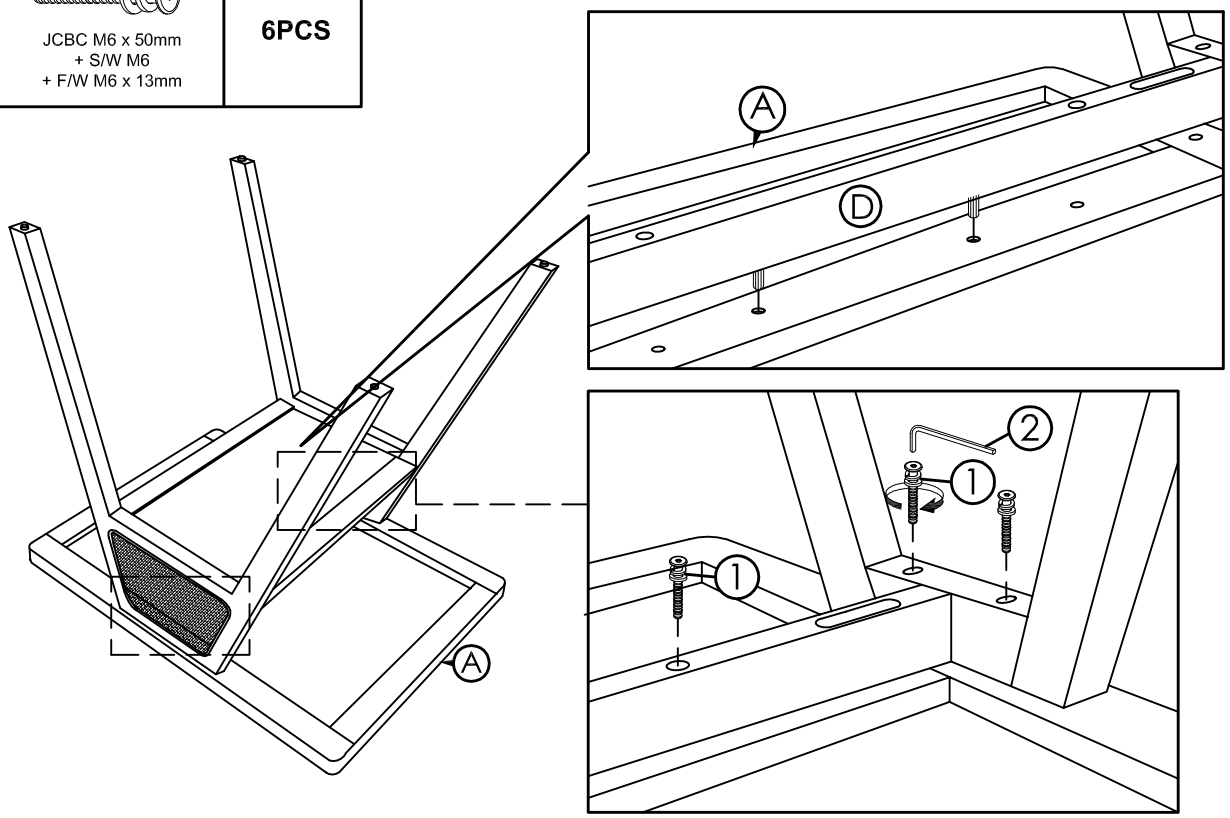

Tighten all bolts slightly loose. Once aligned, fully tighten all bolts but do not over-tighten.