N605P225560

Product manual
Gebrauchsanweisung Manuel du produit Manual del producto Manuale del prodotto

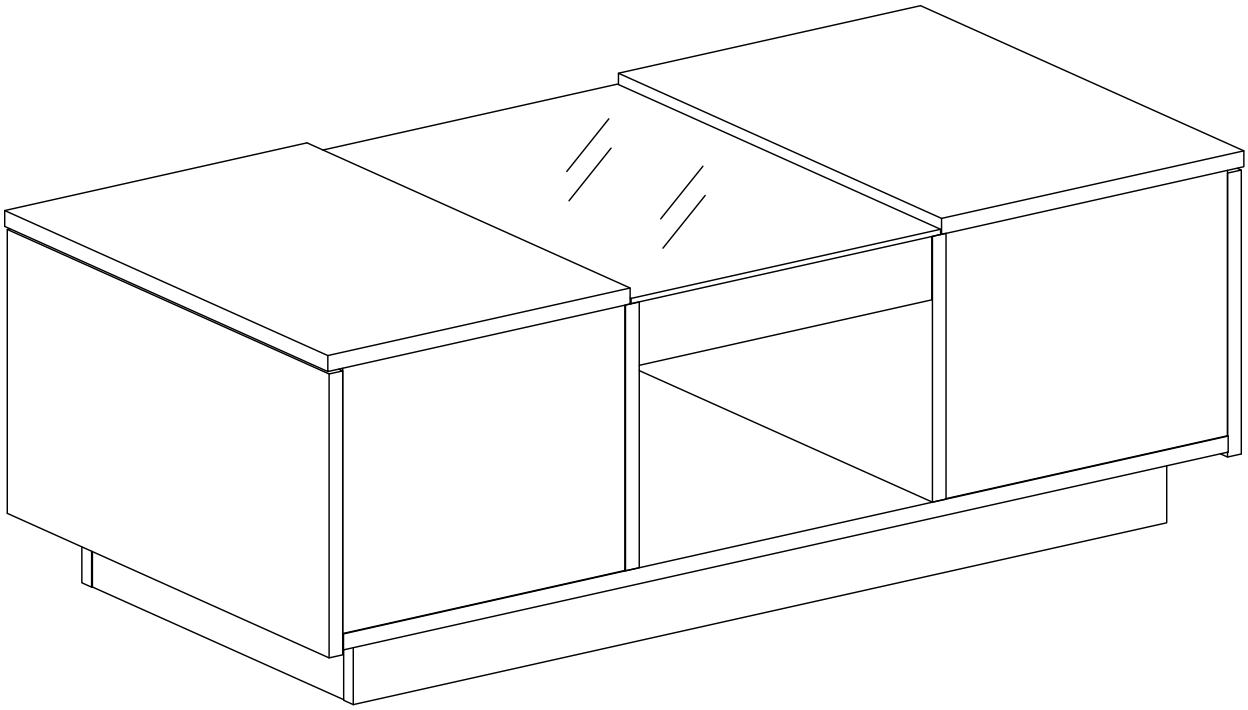

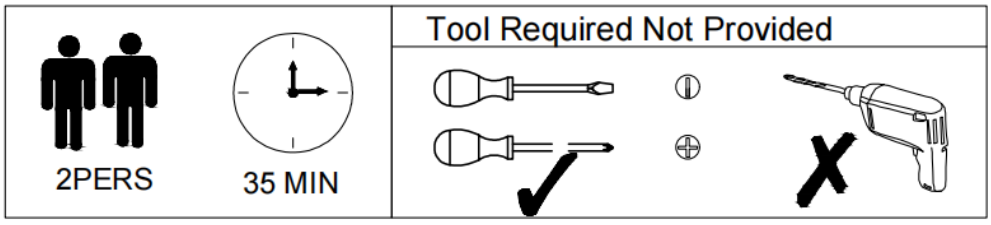



[DE]
Warnung: Lesen Sie die Anleitung vor dem Zusammenbau bitte vollständig durch. Überprüfen Sie, ob Sie alle auf den Seiten aufgeführten Komponenten und Werkzeuge haben.
Warnung: Legen Sie alle Teile auf eine ebene Fläche. Legen Sie eine weiche Decke oder Ähnliches darunter, um sie vor Kratzern oder Flecken zu schützen. Vermeiden Sie es, Komponenten über den Boden zu ziehen oder zu schieben.
Warnung: Überprüfen Sie regelmäßig alle Beschläge und Befestigungen, um sicherzustellen, dass sie sicher sind und um Unfälle zu vermeiden. Wenn Teile fehlen, kaputt, beschädigt oder abgenutzt sind, verwenden Sie das Produkt nicht weiter, bis es mit vom Hersteller autorisierten Teilen repariert wurde.
Warnung: Lassen Sie Kinder nicht auf die Möbel klettern, da dies zum Umkippen und zu schweren Verletzungen führen kann. Bauen Sie die Möbel außerhalb der Reichweite von Kindern zusammen.
Warnung: Stellen Sie die Möbel nicht in die Nähe von Feuerquellen oder heißen Gegenständen, um Brandgefahr zu vermeiden.
Warnung: Reinigen Sie die Möbel mit einem feuchten Tuch oder Alkohol. Verwenden Sie keine Reinigungsmittel mit ätzenden Chemikalien.

[EN]
Warning: Please read instructions fully before starting assembly. Check you have all the components and tools listed on pages.
Warning: Please place all parts on a flat surface. Place a soft blanket or similar underneath to protect against scratches or stains. Avoid dragging or sliding components across the floor.
Warning: Regularly check all fittings and fastenings to ensure they are secure and to prevent accidents. If any parts are missing, broken, damaged, or worn, discontinue use of the product until repairs have been made using factory authorized parts.
Warning: Do not allow children to climb on the furniture as this may result in tipping and serious personal injury. Assemble the furniture away from the reach of children.
Warning: Do not place furniture close to fire sources or high-temperature objects to avoid the risk of fire.
Warning: Clean furniture with a damp cloth or alcohol, avoid using cleaning agents containing corrosive chemicals.

[FR]
Avertissement : Veuillez lire entièrement les instructions avant de commencer l'assemblage. Vérifiez que vous disposez de tous les composants et outils répertoriés sur les pages.
Avertissement : Veuillez placer toutes les pièces sur une surface plane. Placez une couverture douce ou similaire en dessous pour les protéger des rayures ou des taches. Évitez de faire glisser les composants sur le sol.
Avertissement : Vérifiez régulièrement tous les raccords et fixations pour vous assurer qu'ils sont bien fixés et pour éviter les accidents. Si des pièces manquent, sont cassées, endommagées ou usées, cessez d'utiliser le produit jusqu'à ce que des réparations aient été effectuées à l'aide de pièces autorisées par l'usine.
Avertissement : Ne laissez pas les enfants grimper sur les meubles car cela pourrait entraîner un basculement et des blessures graves. Assemblez les meubles hors de portée des enfants.
Avertissement : Ne placez pas les meubles à proximité de sources de feu ou d'objets à haute température pour éviter tout risque d'incendie.
Avertissement : Nettoyez les meubles avec un chiffon humide ou de l'alcool, évitez d'utiliser des produits de nettoyage contenant des produits chimiques corrosifs.



[IT]
Attenzione: leggere attentamente le istruzioni prima di iniziare il montaggio. Verificare di avere tutti i componenti e gli strumenti elencati nelle pagine.
Attenzione: posizionare tutte le parti su una superficie piana. Posizionare una coperta morbida o simile sotto per proteggere da graffi o macchie. Evitare di trascinare o far scivolare i componenti sul pavimento.
Attenzione: controllare regolarmente tutti i raccordi e i dispositivi di fissaggio per assicurarsi che siano sicuri e per prevenire incidenti. Se alcune parti sono mancanti, rotte, danneggiate o usurate, interrompere l'uso del prodotto fino a quando non siano state eseguite le riparazioni utilizzando parti autorizzate dalla fabbrica.
Attenzione: non consentire ai bambini di arrampicarsi sui mobili poiché ciò potrebbe causare ribaltamenti e gravi lesioni personali. Montare i mobili lontano dalla portata dei bambini.
Attenzione: non posizionare i mobili vicino a fonti di fuoco o oggetti ad alta temperatura per evitare il rischio di incendio.
Attenzione: pulire i mobili con un panno umido o alcol, evitare di utilizzare detergenti contenenti sostanze chimiche corrosive.

[ES]
Advertencia: Lea las instrucciones completamente antes de comenzar el montaje. Compruebe que tiene todos los componentes y herramientas que se enumeran en las páginas.
Advertencia: Coloque todas las piezas sobre una superficie plana. Coloque una manta suave o algo similar debajo para protegerlas de rayones o manchas. Evite arrastrar o deslizar los componentes por el piso.
Advertencia: Verifique regularmente todos los accesorios y fijaciones para asegurarse de que estén seguros y evitar accidentes. Si falta alguna pieza, está rota, dañada o desgastada, deje de usar el producto hasta que se hayan realizado las reparaciones con piezas autorizadas de fábrica.
Advertencia: No permita que los niños se suban a los muebles, ya que esto puede provocar que se vuelquen y lesiones personales graves. Monte los muebles fuera del alcance de los niños.
Advertencia: No coloque los muebles cerca de fuentes de fuego u objetos de alta temperatura para evitar el riesgo de incendio.
Advertencia: Limpie los muebles con un paño húmedo o alcohol, evite usar agentes de limpieza que contengan químicos corrosivos.

Importer	COMHARBOR LIMITED
Address	Unit C, Swift Point, Cosford Lane, Rugby, CV21 1PY, GB
Email	harborcomhar@gmail.com
Manufacturer	SHANDONGYIJUMUZHAI SMART HOME CO.,LTD
Add.	1666MEASTOFJINGUANGSTREETBRIDGE, LUOCHENGTOWN,SHOUGUANGCITY,WEIFANGCITY, SHANDONG PROVINCE
Email/URL	http://www.yinjumuzhai.com
Product identification	N605P225560
Made in	CHINA
UK REP	COMHARBOR LIMITED Unit C, Swift Point, Cosford Lane, Rugby, CV21 1PY, GB harborcomhar@gmail.com

Parts List

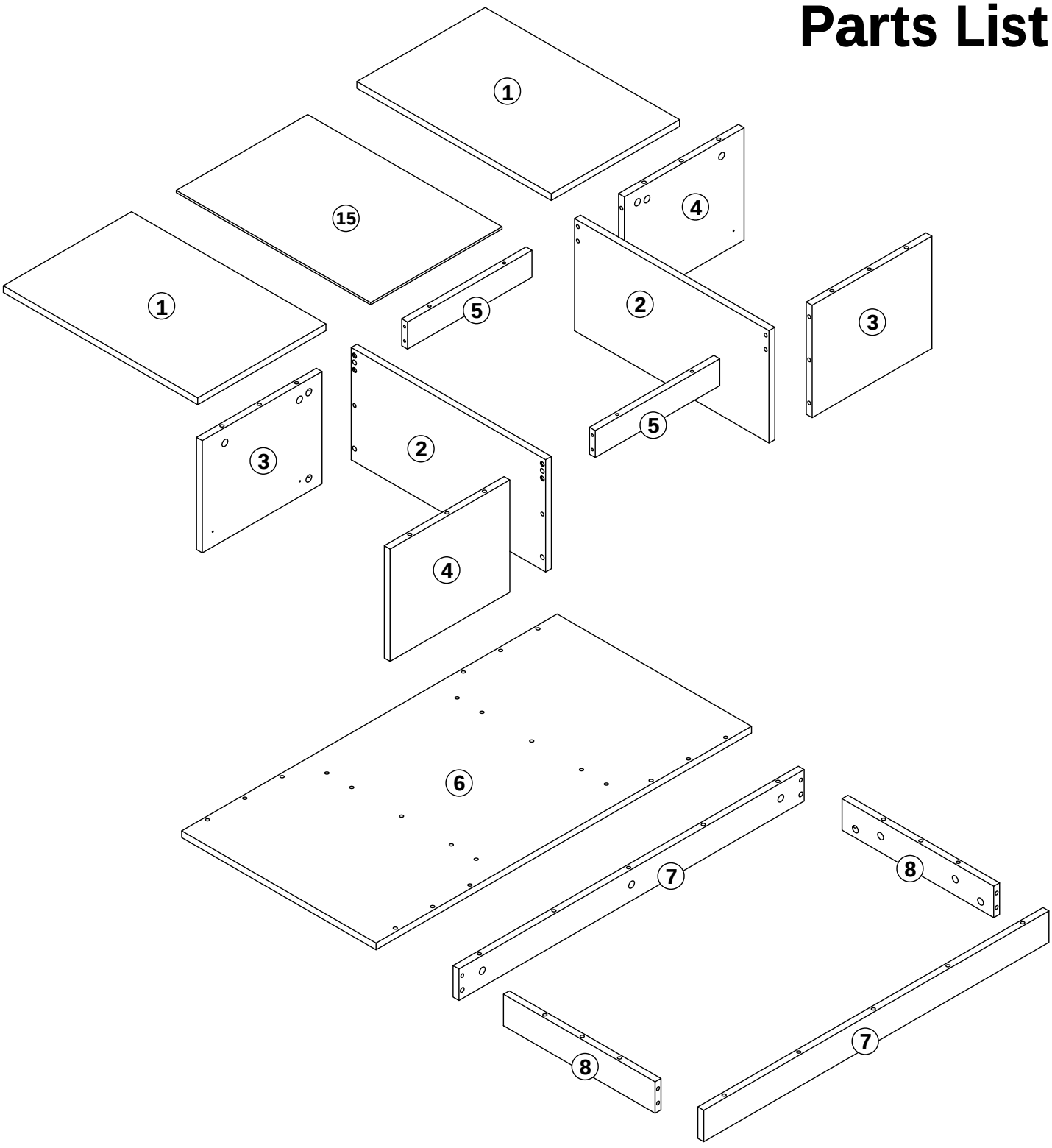

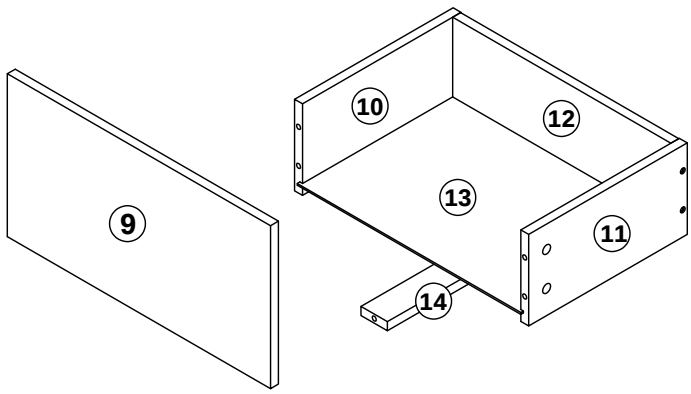

x 2

N605P225560

1 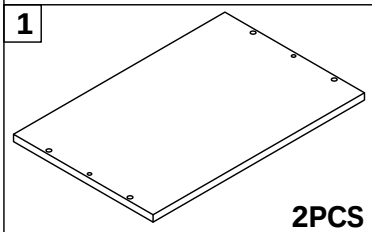 2PCS	2 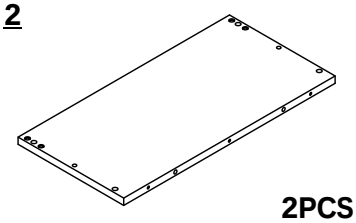 2PCS	3 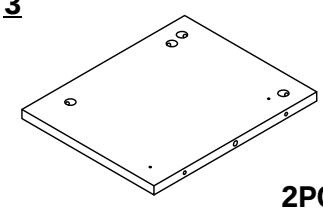 2PCS	4 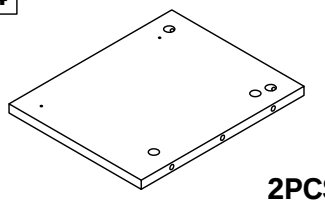 2PCS
5 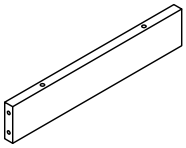 2PCS	6 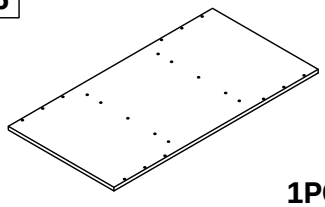 1PC	7 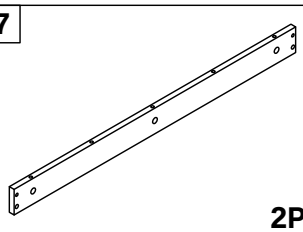 2PCS	8 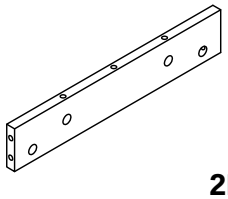 2PCS
9 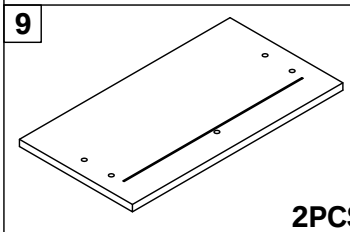 2PCS	10 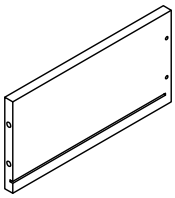 2PCS	11 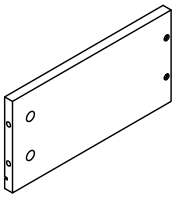 2PCS	12 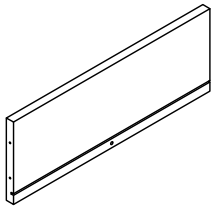 2PCS
13 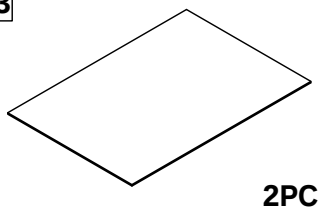 2PCS	14 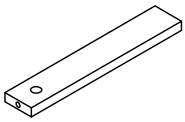 2PCS	15 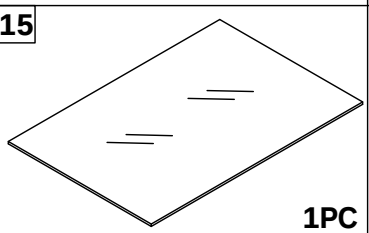 1PC	

Hardware N605P225560

A 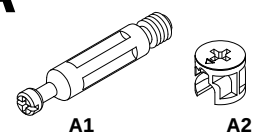 A1 A2 40STES	B 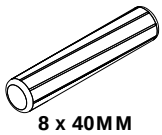 8 x 40MM 26PCS	C  3.5 x 14MM 16PCS	D 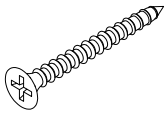 3.5 x 35MM 10PCS
E 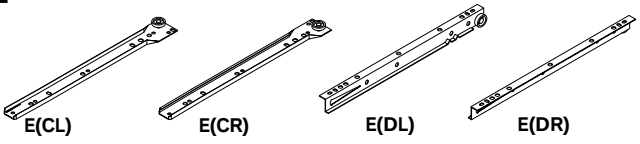 E(CL) E(CR) E(DL) E(DR) 2SETS	F 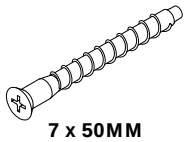 7 x 50MM 22PCS	G  6PCS	
H 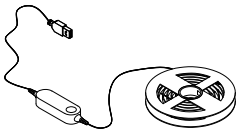 1SET	J  4PCS	K 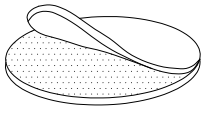 40PCS	

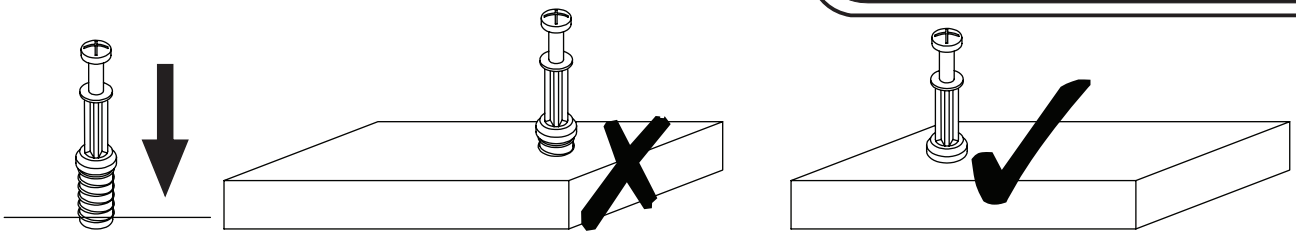

EN_QUICKFIT: Tighten quickfit until shoulder is flush with panel.Do not overtighten or undertighten.
FR_RACCORD RAPIDE:Faites serrer le raccord rapide jusqu'à ce que l'épaulement soit parfaitement encastré dans le panneau. Il ne faut ni trop serrer ni insuffisamment serrer.
ES_QUICKFIT:Apriete quickfit hasta que el hombre se descargue con el panel. NO lo sobreapriete ni lo apriete poco.
DE_QUICKFIT:Ziehen Sie den Quickfit fest, bis die Schulter mit der Platte bündig ist. Bitte nicht zu fest oder zu schwach anziehen.
IT_MONTAGGIO RAPIDO:Stringere il montaggio rapido fino a quando la spalla è a filo con il pannello, non stringere troppo o troppo poco.

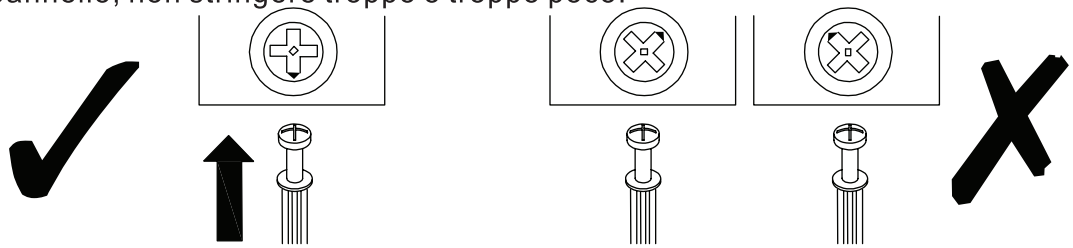

EN_CAM LOCK: When fitting cam lock, ensure starting position is correct before you insert connecting quickfit.
FR_SERRURE BATTEUSE:Avant d'insérer la serrure batteuse, veillez à la bonne orientation avant d'insérer le raccord rapide.
ES_CIERRE DE LA CÁMARA:Cuando instale el cierre de la cámara, asegúrese de que la posición de inicio es correcta antes de que inserte el quickfit conector.
DE_CAM-LOCK:Achten Sie bei der Montage des Cam-Locks auf die richtige Ausgangsposition, bevor Sie den Quickfit einsetzen.
IT_BLOCCAGGIO A CAMMA:Quando si monta il bloccaggio a camma, assicurarsi che la posizione iniziale sia corretta prima di inserire il montaggio rapido di collegamento.

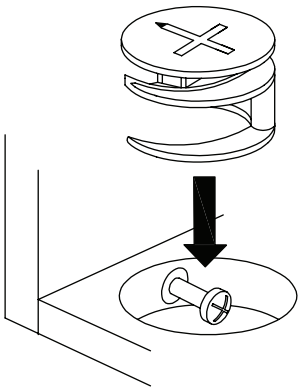

EN_ Quickfit head should be in the centre of the cam lock when the two panels are joined.
Cam lock should be inserted before quickfit.
FR_ Lorsque les deux panneaux sont assemblés, la tête du raccord rapide doit reposer au centre de la serrure batteuse.
Il faut insérer la serrure batteuse avant le raccord rapide.
ES_ El cabezal del quickfit debe estar en el centro del cierre de la cámara cuando se unan los dos paneles.
Se debe insertar el cierre de la cámara antes que el quickfit.
DE_ Der Quickfit-Kopf sollte sich in der Mitte des Cam-Locks befinden, wenn die beiden Platten zusammengefügt sind.
Der Cam-Lock sollte vor dem Quickfit eingesetzt werden.
IT_ La testa del montaggio rapido deve trovarsi al centro del bloccaggio a camma quando i due pannelli sono uniti.
Il Bloccaggio a Camma deve essere inserito prima del montaggio rapido.

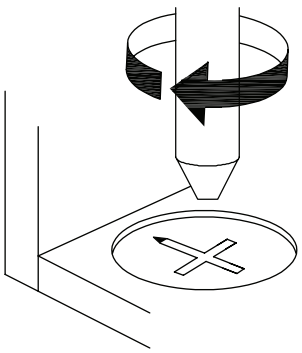

EN_ Turn cam lock clockwise to tighten.
FR_ Faites tourner la serrure batteuse dans le sens des aiguilles d'une montre pour la resserrer.
ES_ Gire el cierre de la cámara en sentido horario para apretarlo.
DE_ Drehen Sie den Cam-Lock im Uhrzeigersinn, um ihn festzuziehen.
IT_ Ruotare il bloccaggio a camma in senso orario per stringere.

1

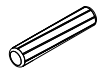

8 x 40MM **B x 16**

x 2

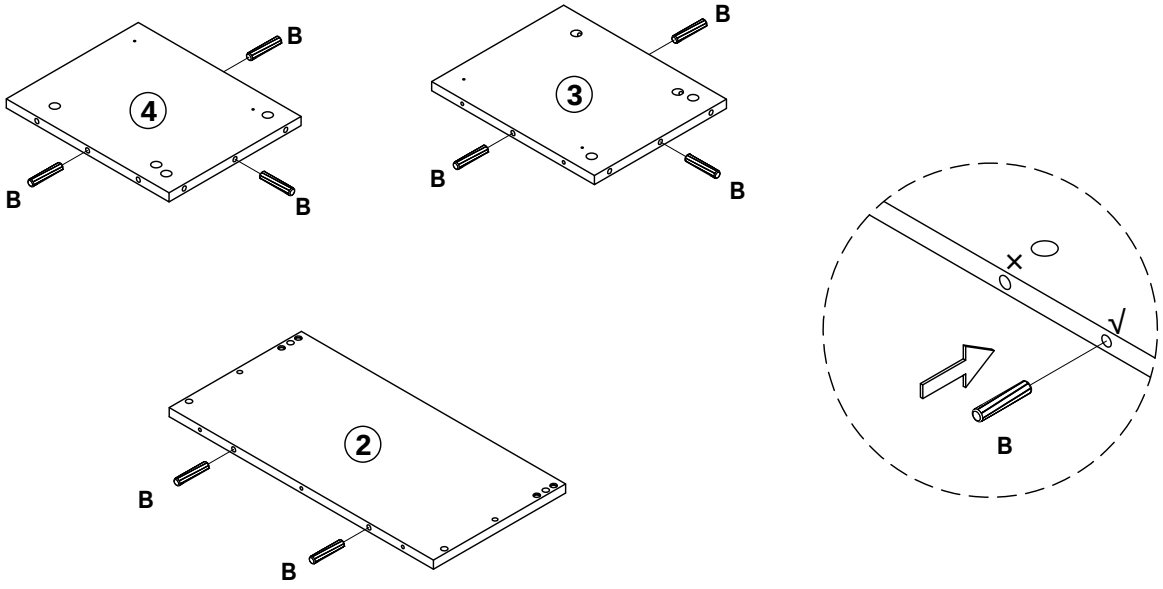

2



7 x 50MM **F x 8**

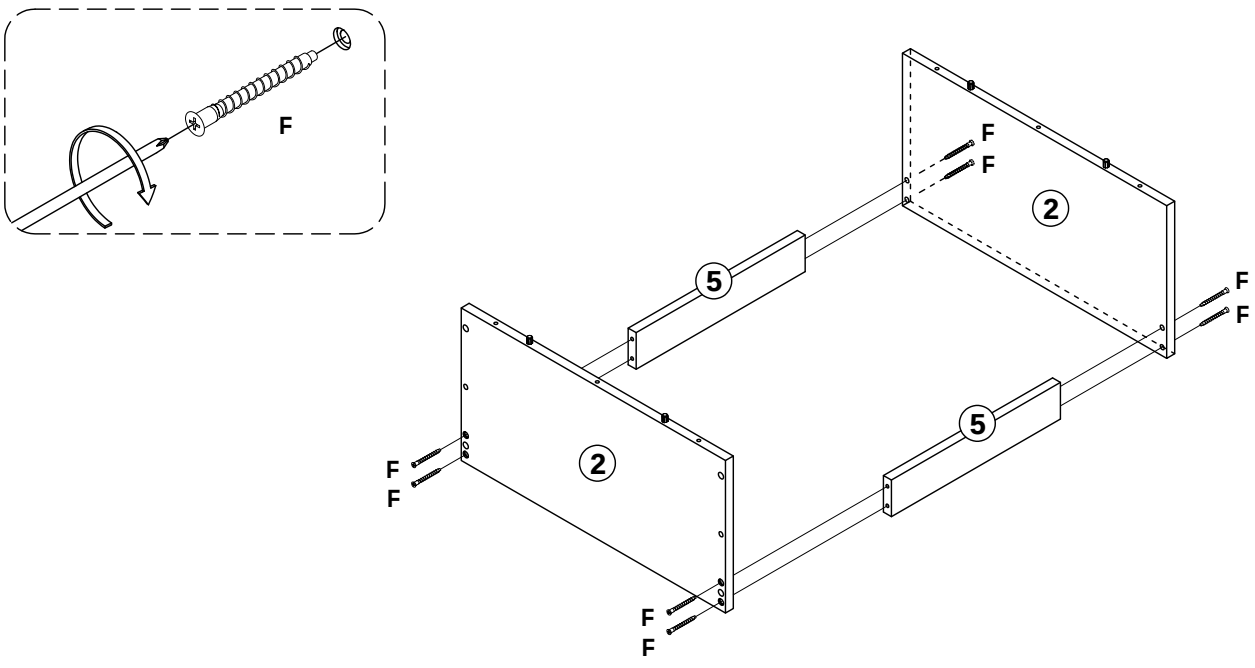

3



A1 x 8

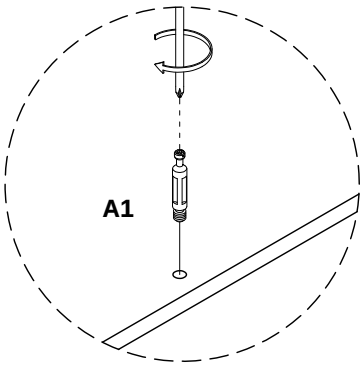

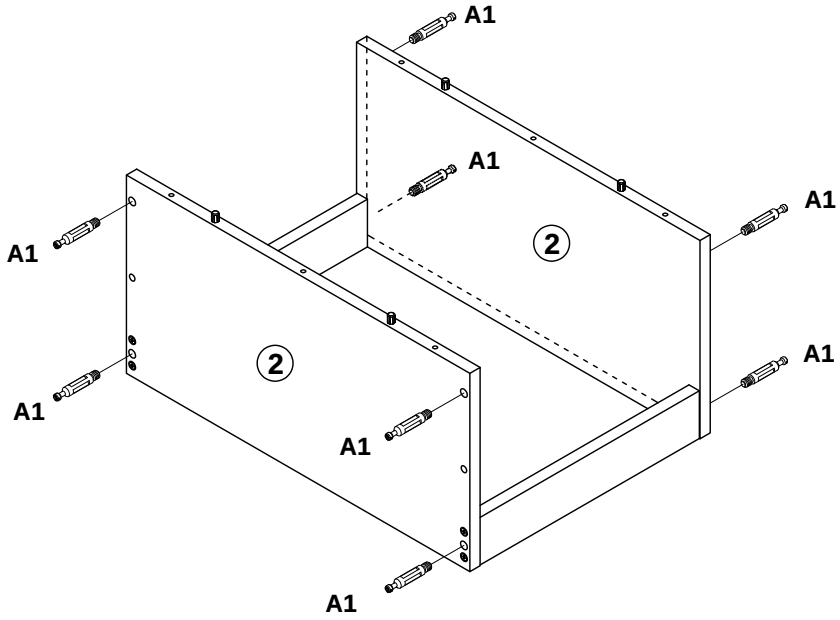

4



A2 x 8

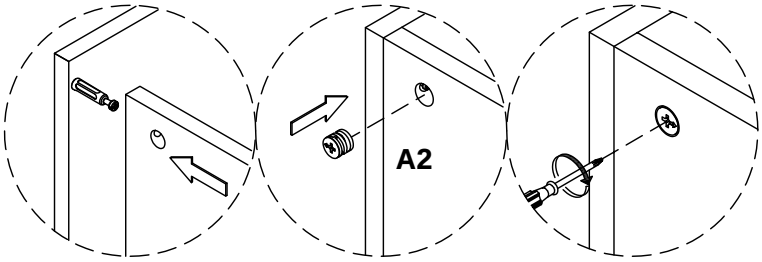

5

A1 x 10

7 x 50MM F x 14

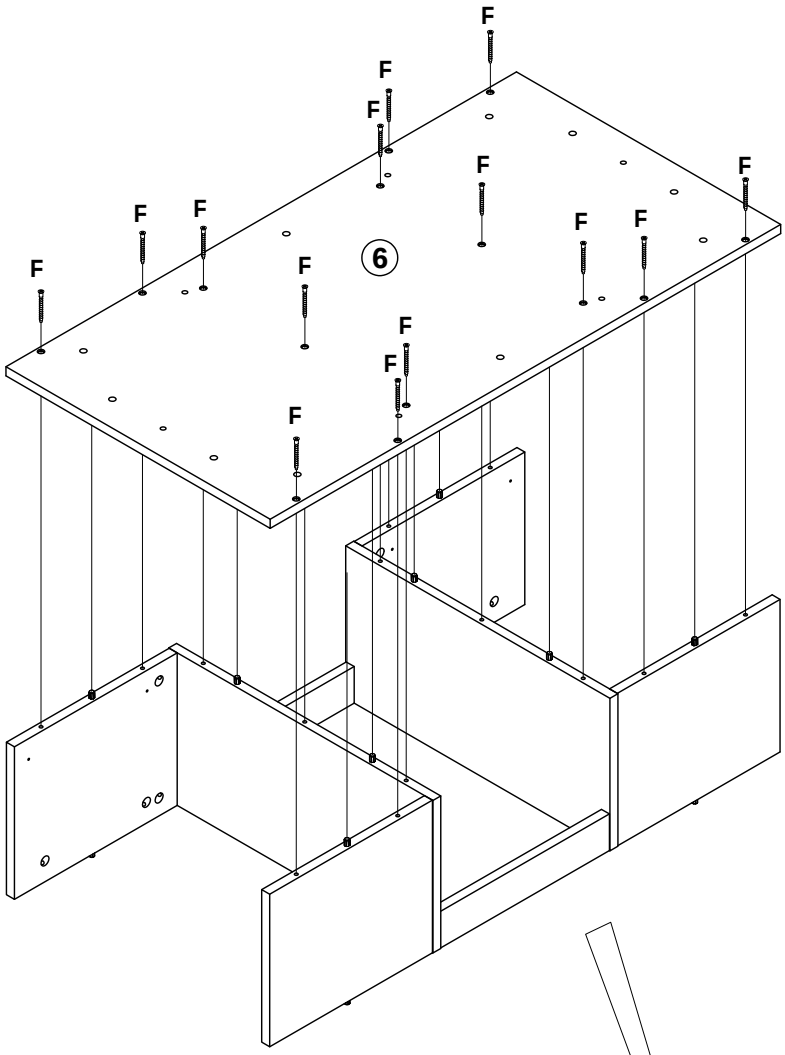

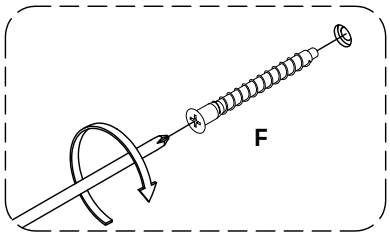

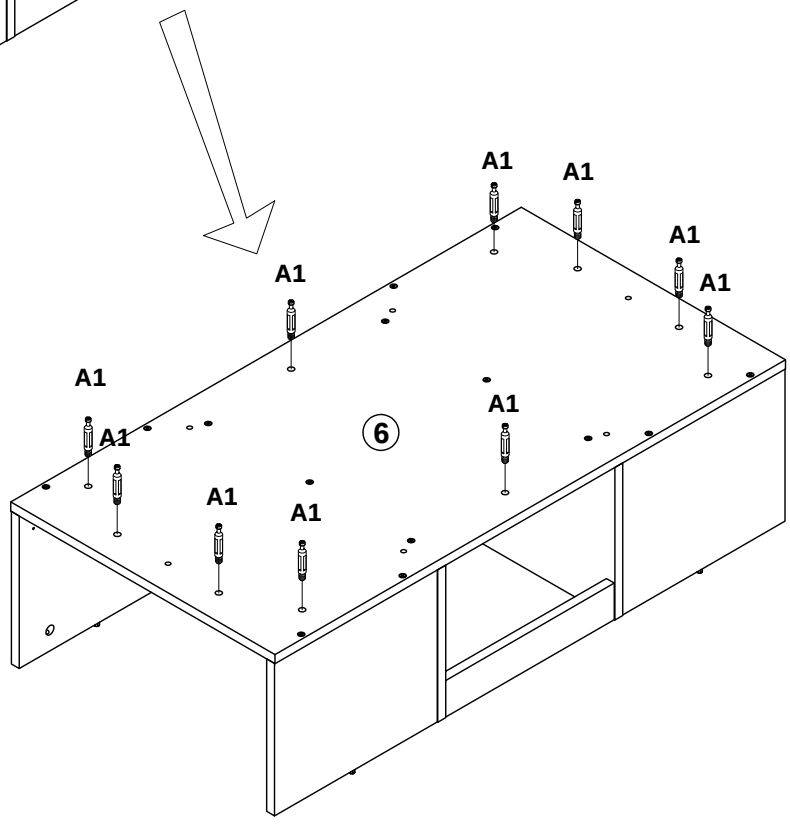

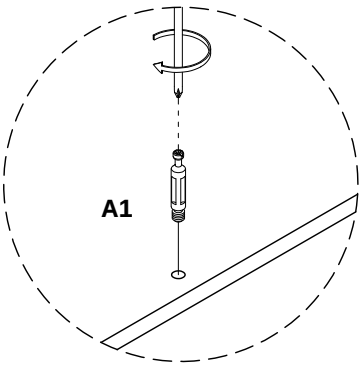

6



A1 x 4



8 x 40MM B x 10

x 2

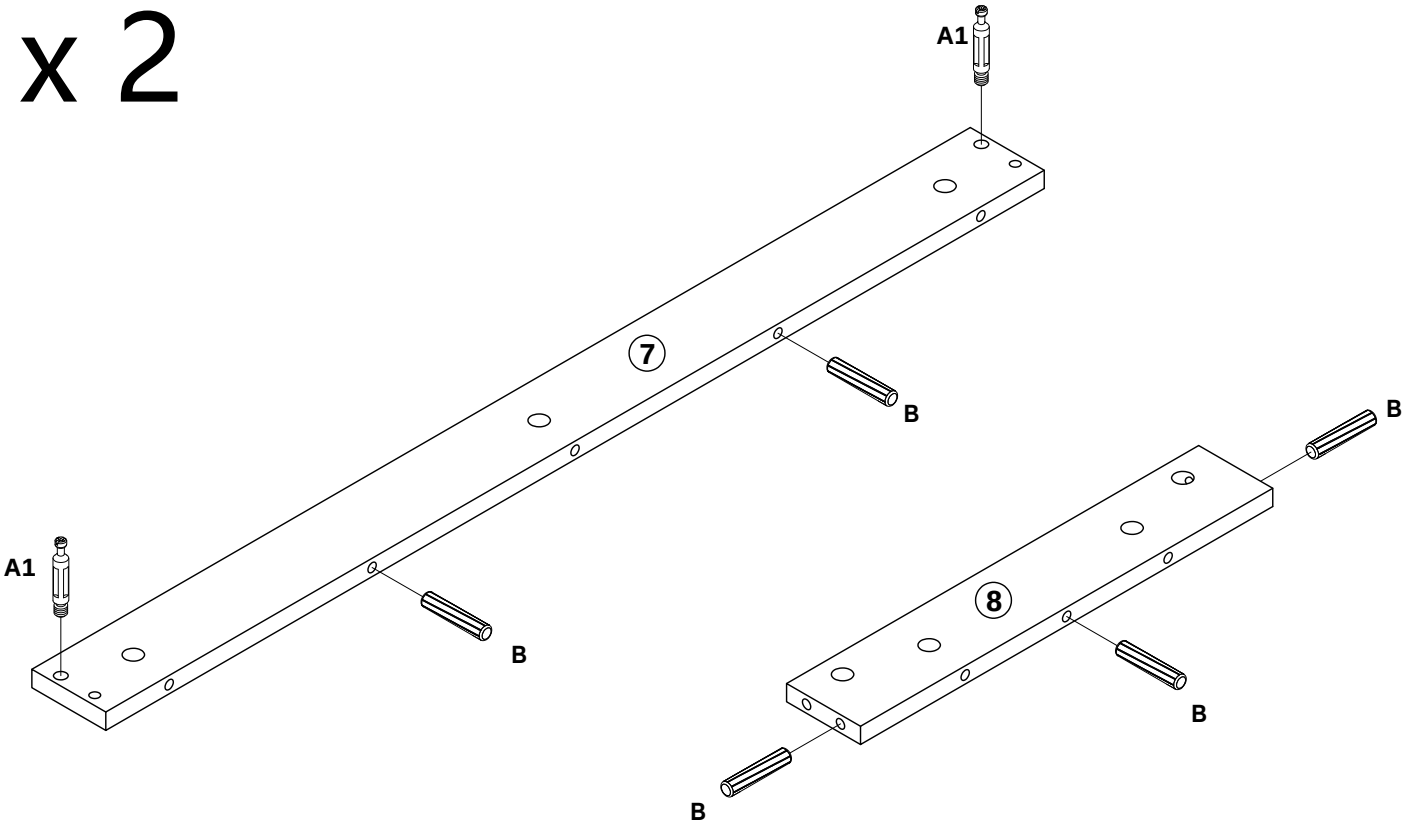

7



A2 x 4

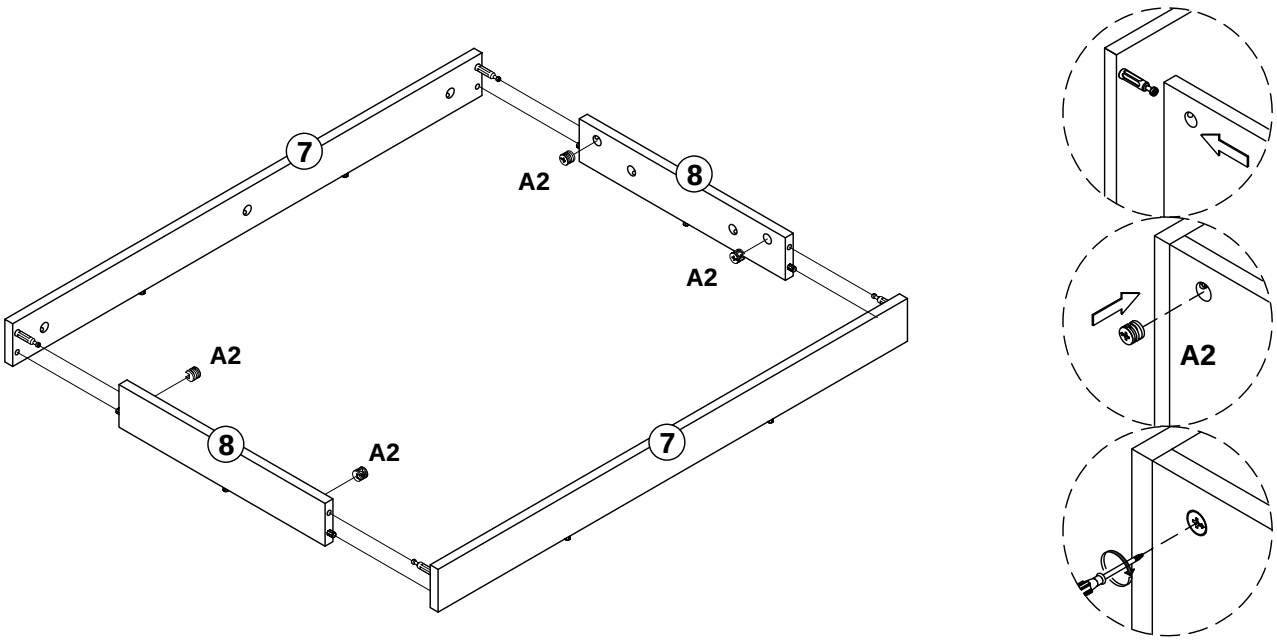

8



A2 x 10

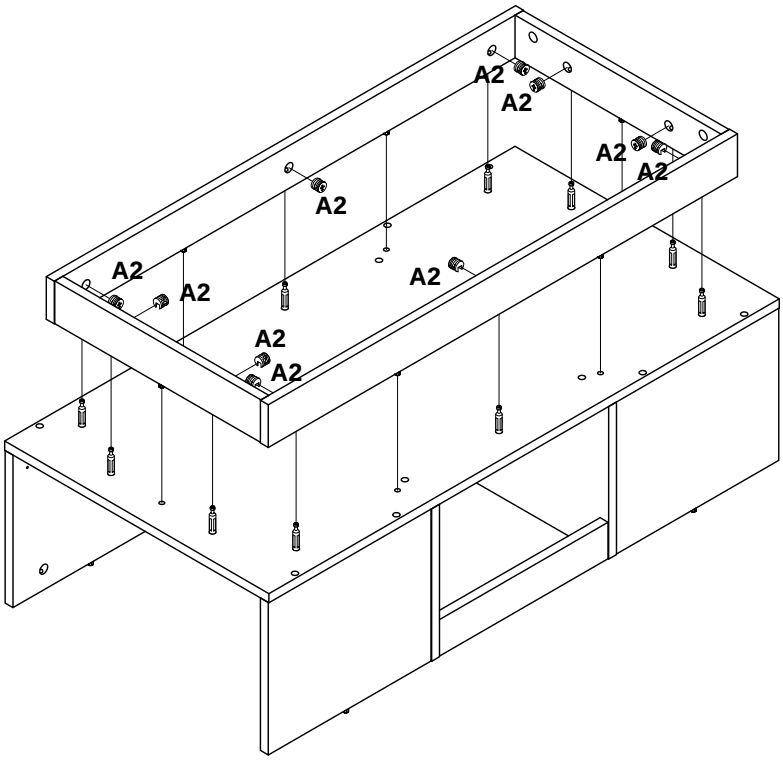

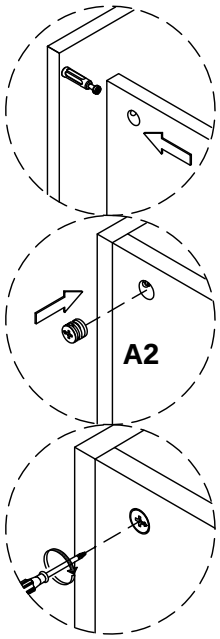

9



G x 6

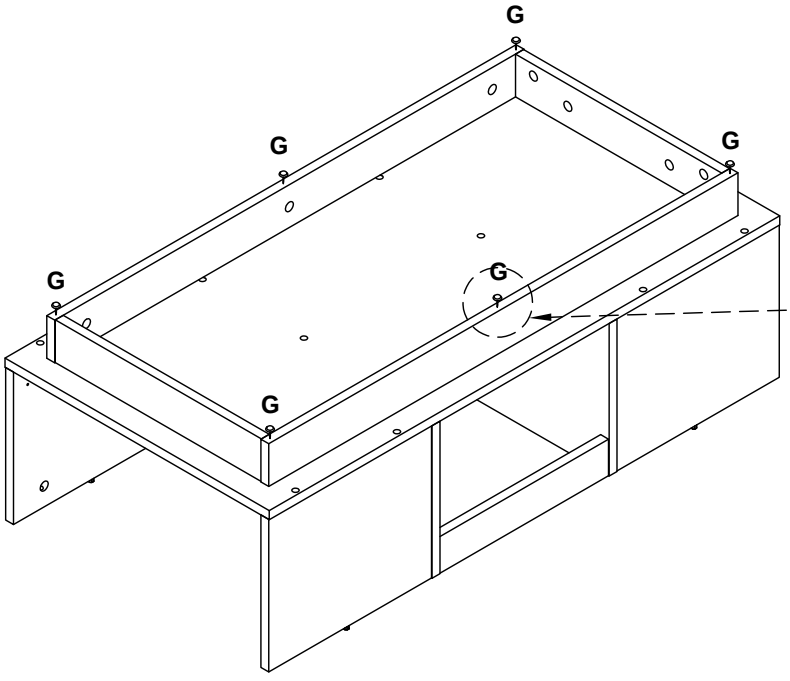

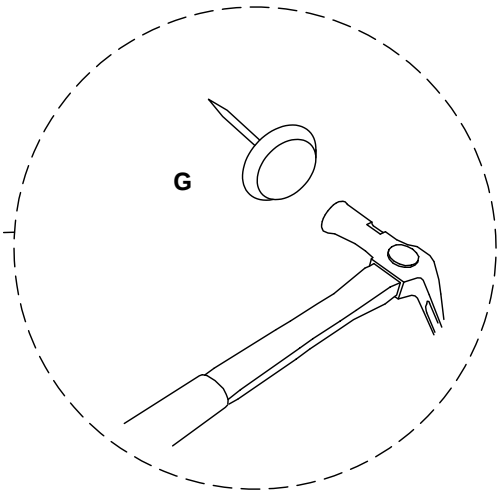

10

3.5 x 14MM C x 8	E(CL) x 2	E(CR) x 2

EN:Thissideupway
DE:DieseSeite nachoben
FR:Ce côté vers le haut
IT:Da questa parte verso l'alto
ES:De esta manera, con el lado hacia arriba

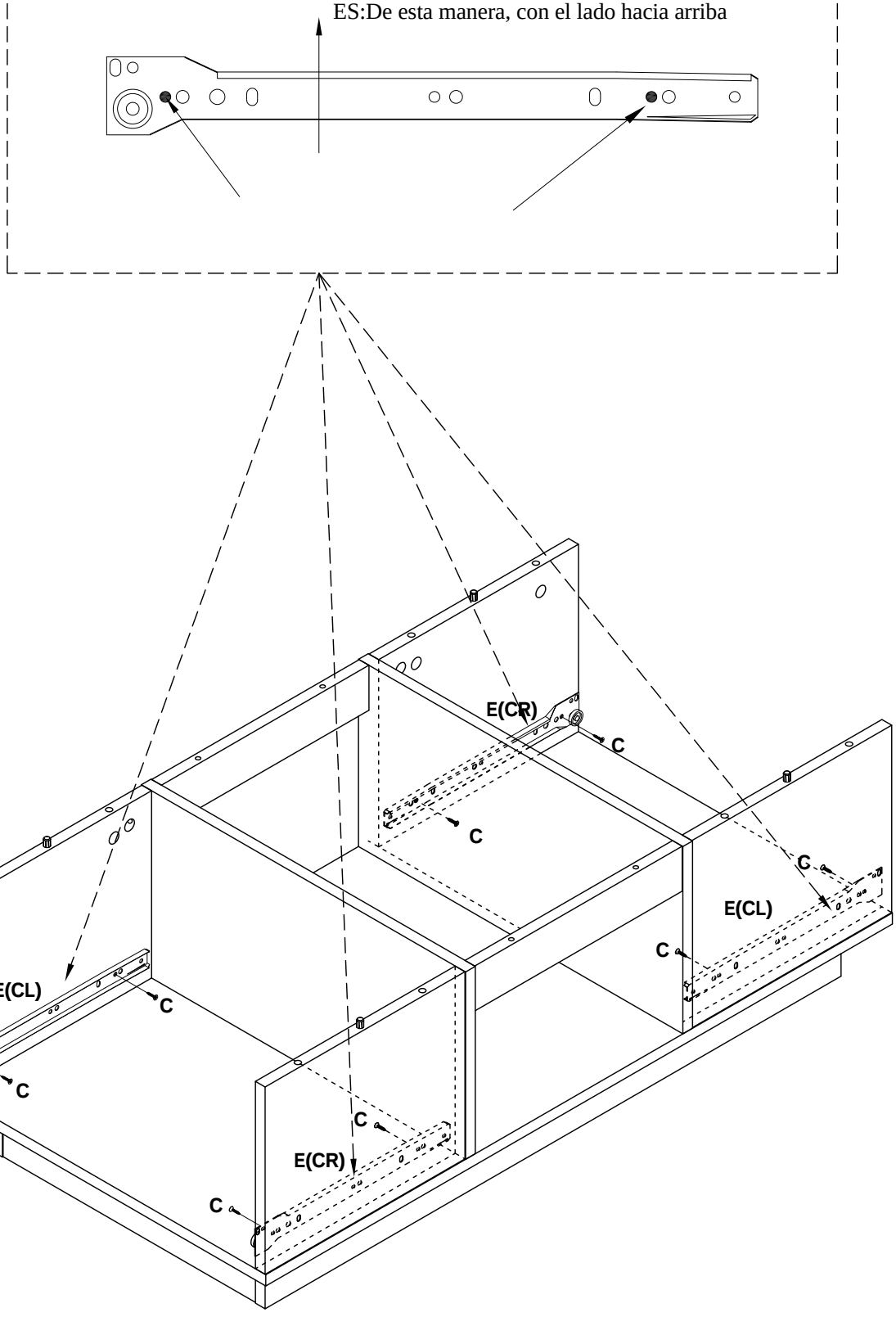

11



A1 x 8



A2 x 8

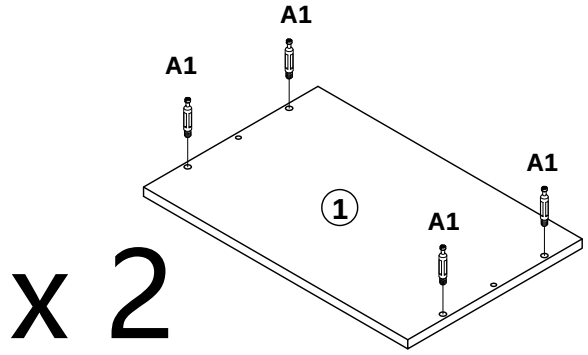

x 2

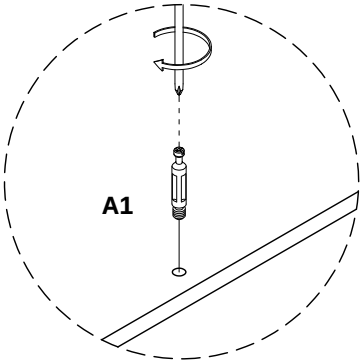

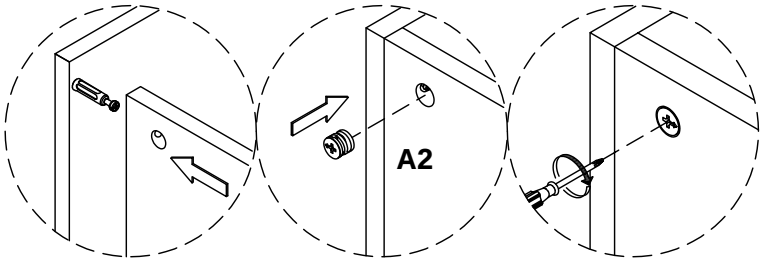

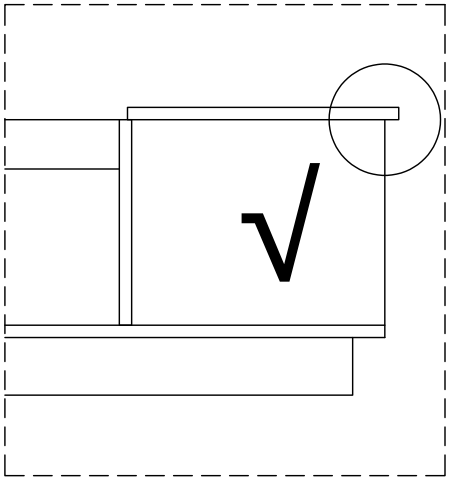

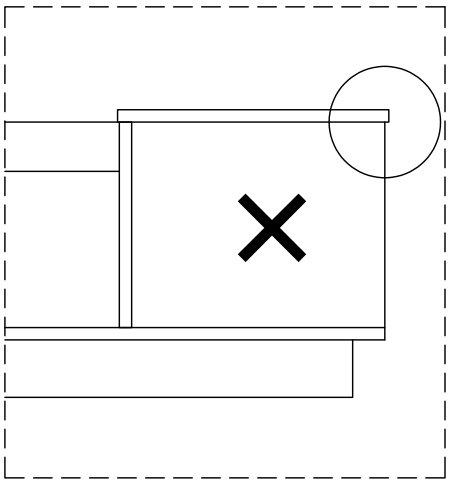

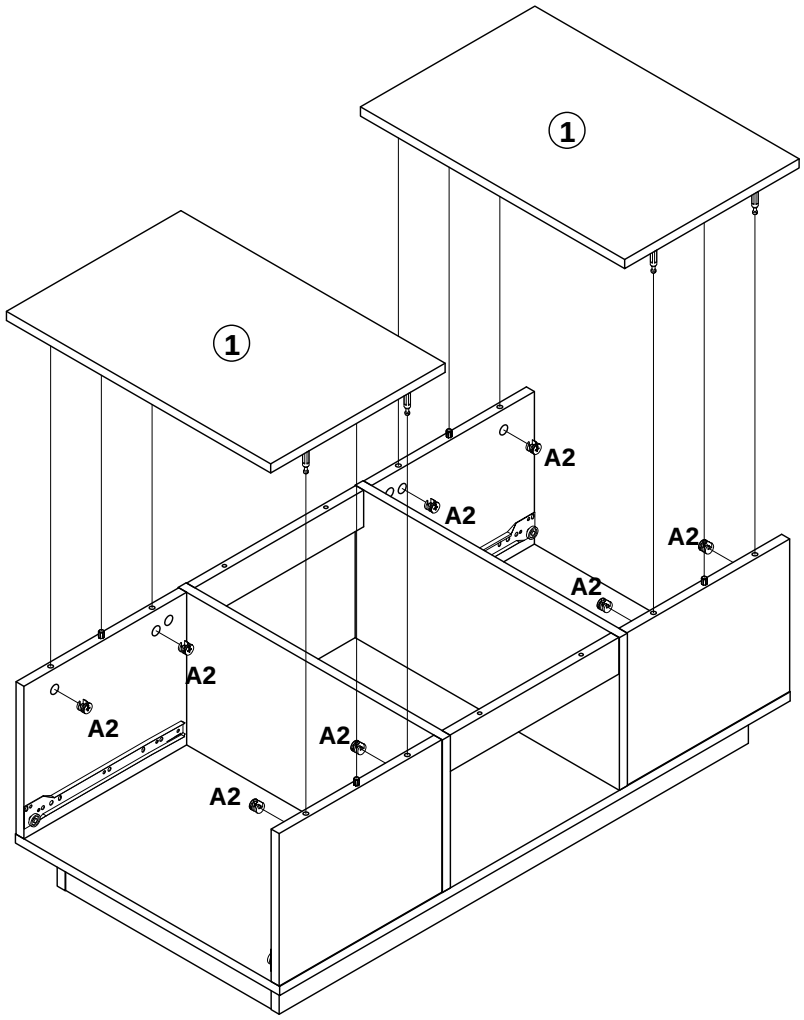

12



A1 x 10

x 2

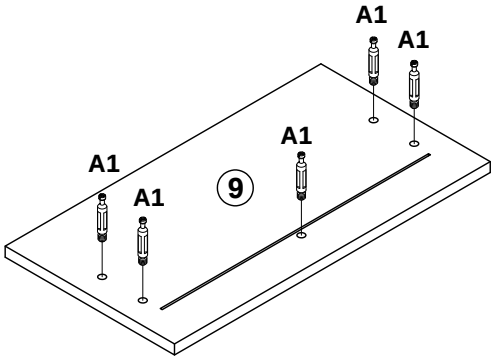

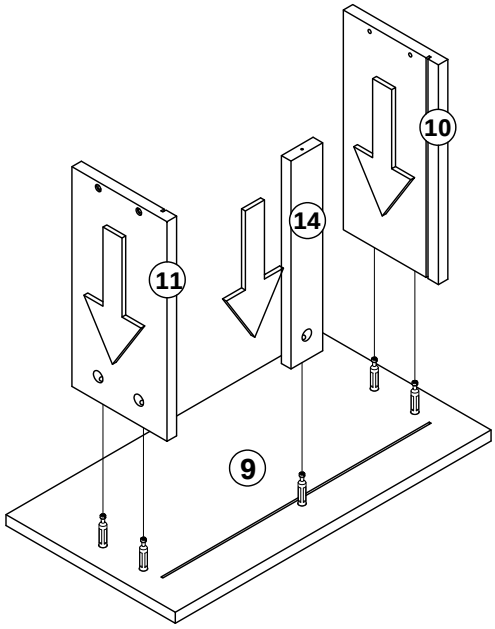

13



A2 x 10



3.5 x 35MM D x 10

x 2

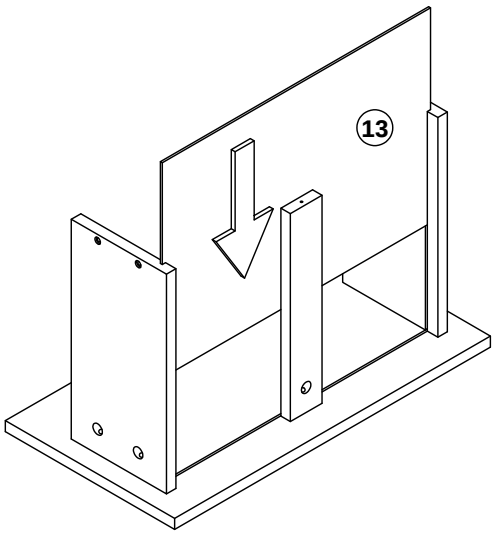

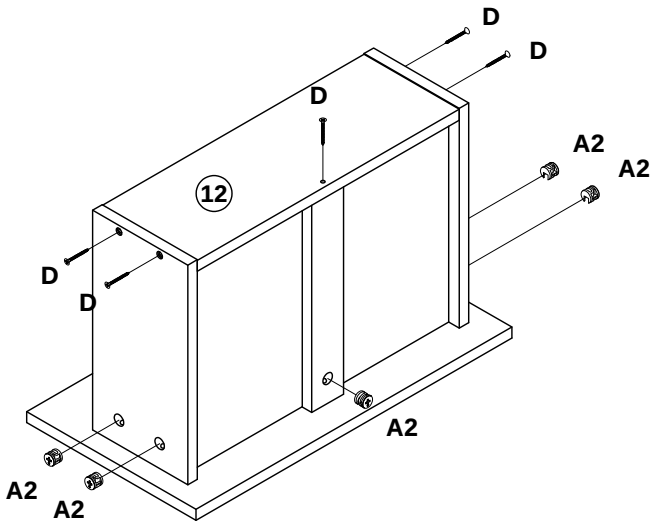

14



3.5 x 14MM C x 8

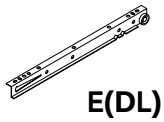

E(DL) x 2

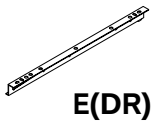

E(DR) x 2

x 2

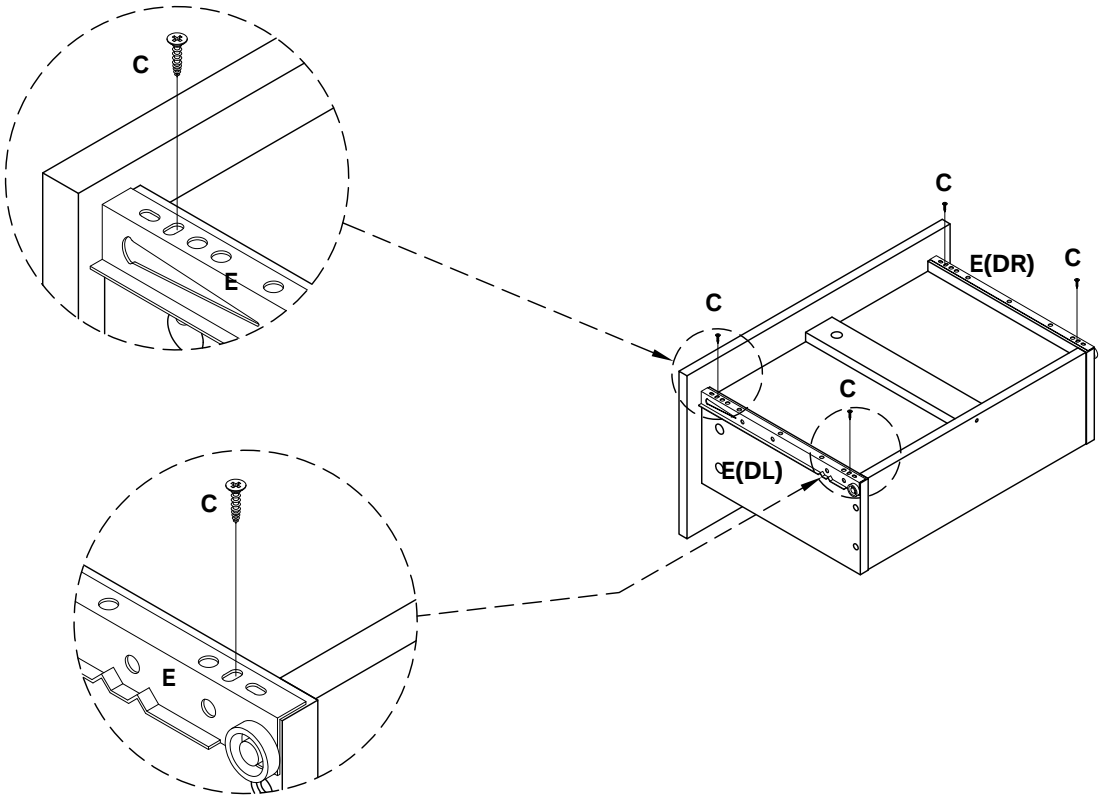

15

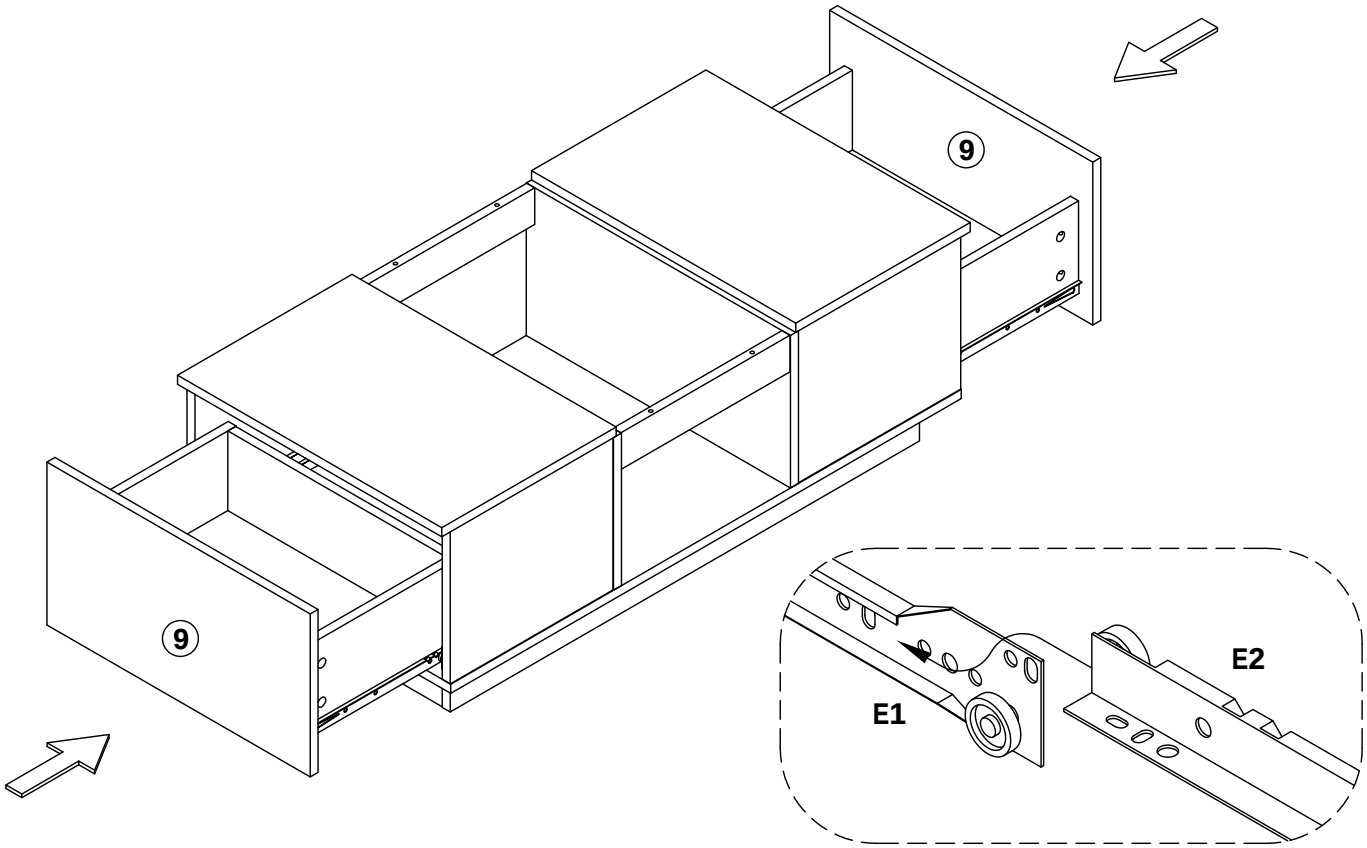

16



H x 1

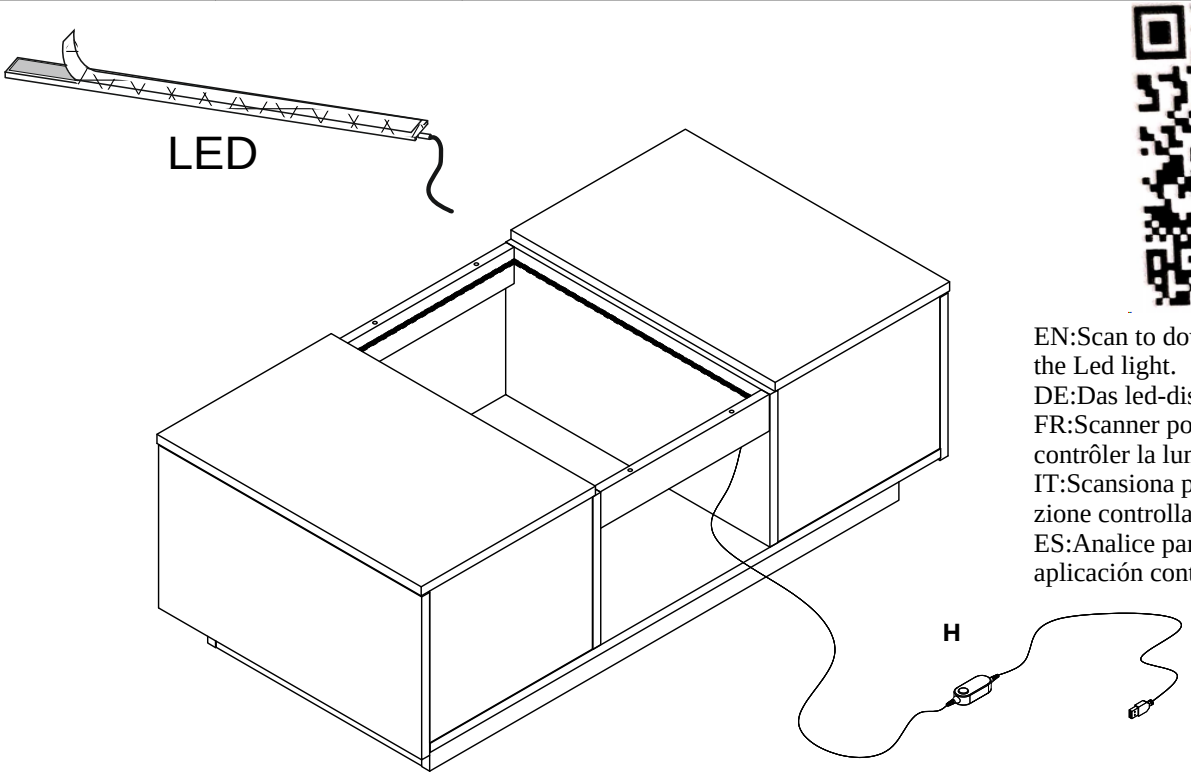

EN:Scan to download App control the Led light.
DE:Das led-display wird durchsucht.
FR:Scanner pour télécharger App contrôler la lumière Led.
IT:Scansiona per scaricare l' applica zione controlla la luce Led.
ES:Analice para descargar la aplicación control de la luz Led.

17



J x 4

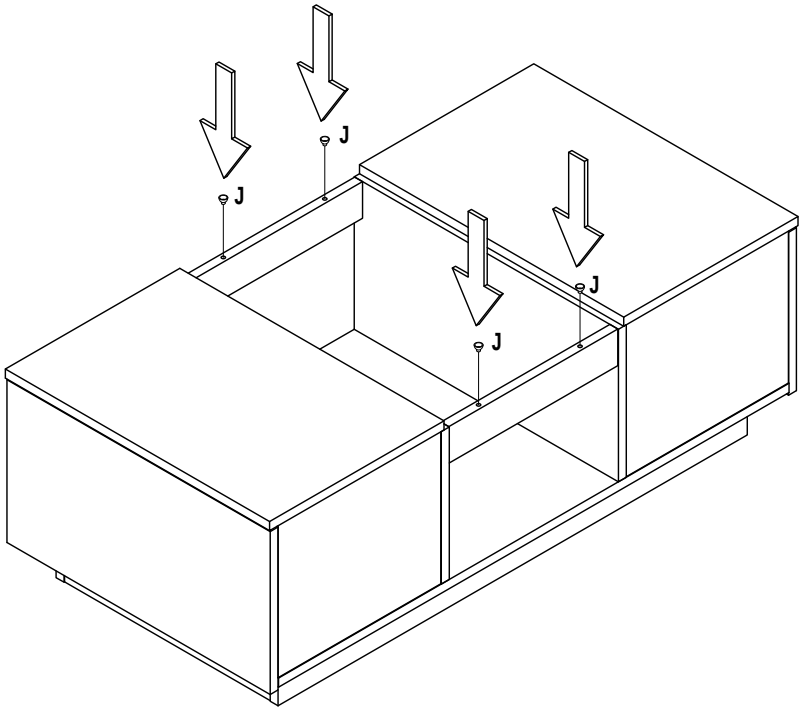

18



K x 40

EN:In order to make the product more beautiful ,please paste
hardware K on the exposed holes.
DE:Um das Produkt noch schöner zu machen, kleben Sie bitte
Hardware K auf die freiliegenden Löcher.
FR:Afin de rendre le produit plus beau, s’ il vo us plaît coller le
matériel K sur les trous exposés.
IT:Per rendere il prodotto più bello, incollare l ’ hardware K sui fori esposti.
ES:Con el fin de hacer el producto más hermoso, por favor pega
hardware K en los agujeros expuestos

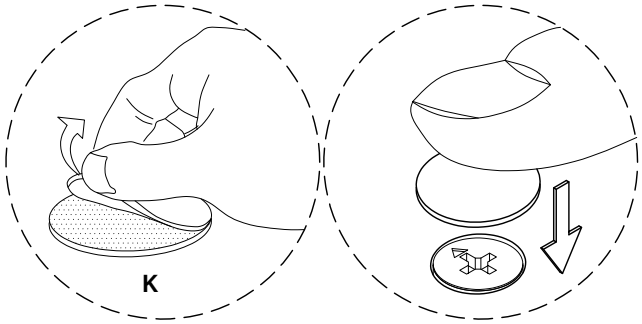

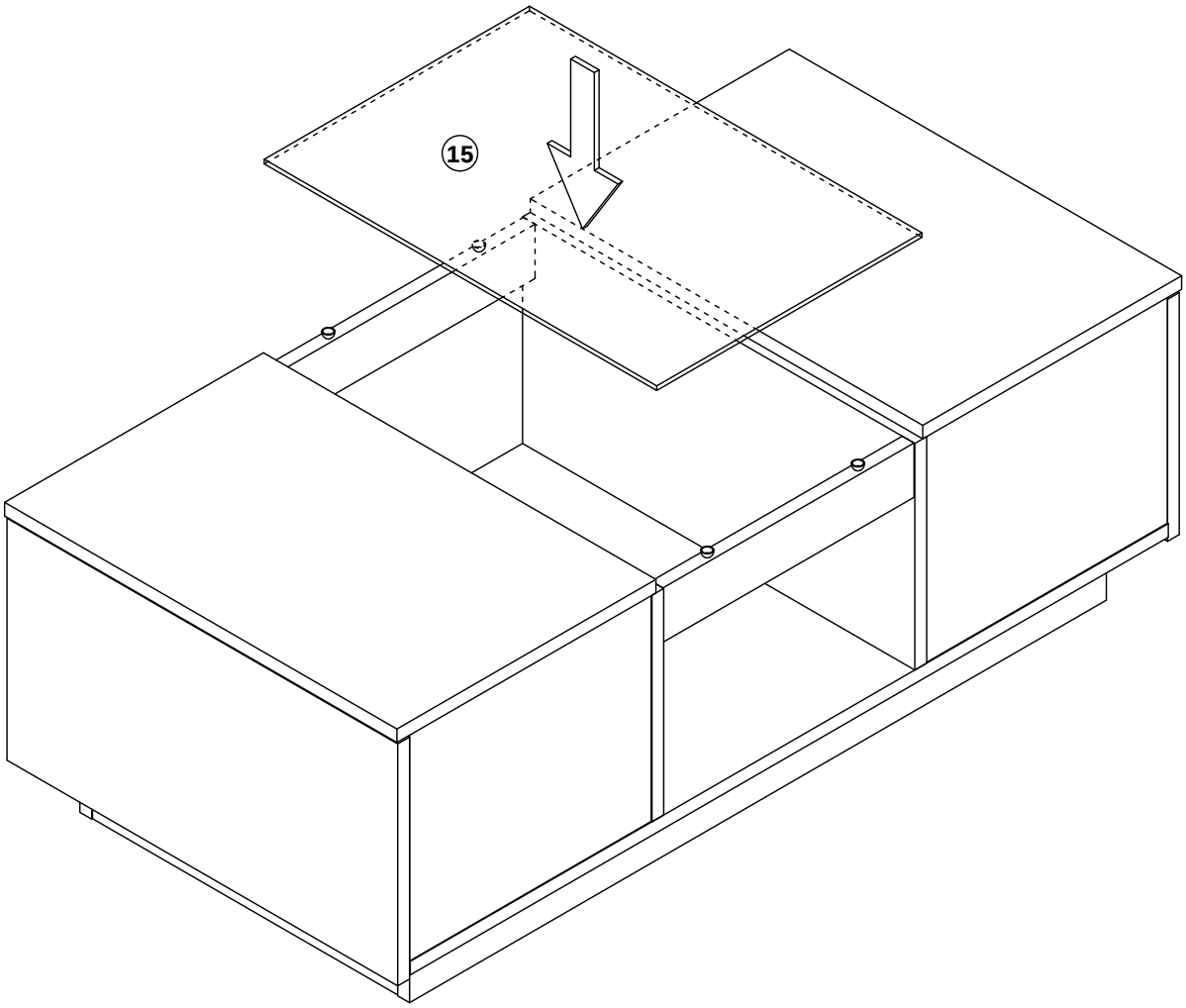

Attestation of compliance Attestation of compliance Attestation of compliance Attestation of compliance

Attestation of Compliance

Declaration No.:	TMC210319128-E
Name and address of Applicant:	**Shenzhen CWG Technology Co., Ltd** 5 / F, No.264 Baoshi East Road, Shiyan street, Bao'an District, Shenzhen,China 518108
Name and address of Manufacturer:	**Shenzhen CWG Technology Co., Ltd** 5 / F, No.264 Baoshi East Road, Shiyan street, Bao'an District, Shenzhen,China 518108
Product name:	**LED Strip**
Rated：	DC12V
Product model(s):	CWG-5050RGB-60D-12V,CWG-5050RGB-30D-12V , CWG-5050RGB-18D-12V, CWG-5050RGB-60D-24V, CWG-5050RGB-60D-5V, CWG-5050RGB-30D-5V, CWG-5050RGB-18D-5V, CWG-5050-60D-12V, CWG-5050-30D-12V, CWG-5050-60D-24V, CWG-HC5050RGB-60D-12V, CWG-HC5050RGB-30D-12V, CWG-HC5050RGB-60D-24V, CWG-HC5050-60D-12V, CWG-HC5050-30D-12V, CWG-HC5050-60D-24V, CWG-HC5050RGB-30D-5V, CWG-HC5050RGB-60D-5V, CWG-HC5050RGB-144D-5V, CWG-2835-60D-12V, CWG-2835-120D-12V，CWG-2835-60D-24V, CWG-2835-120D-24V, CWG-2835-60D-5V，CWG-2835-120D-5V
Product trademark:	创唯光

This Attestation of Compliance confirms that the product meets the requirements of the following standard.

BS EN IEC 55015:2019+A11:2020 IEC 61547:2020

The Attestation of Compliance has been carried out in accordance with individual rules and conditions agreed with the applicant. Evaluation has been carried out in accordance with:

Test report(s) No.:	TMC210319128-E
Test conducted by:	TMC Testing Services (Shenzhen) Co., Ltd.
Declaration issue date:	March 26, 2021

Notes:

This Attestation of Compliance is issued according to the Great Britain legislation Electromagnetic Compatibility Regulations 2016 It confirms that the listed products complies with all essential requirements of the Regulations and applies only to the sample and its technical documentation to TMC Testing Services (Shenzhen) Co., Ltd. for testing.

After preparation of the necessary technical documentation (which must be kept for up 10 years after the product is placed on the GB market) as well as the UK Declaration of Conformity, the required UKCA marking can be affixed on the product. Other relevant Regulations have to be observed.

TMC Testing Services (Shenzhen) Co., Ltd.
t:86-755-86642861 cert@tmc-lab.com www.tmc-lab.com
1st Floor, Block A1, Zone A, Xinshidai Gongrong Industrial Park, No. 2, Shihuan Road, Shiyan Street, Baoan District, Shenzhen, China

Bauart geprüft TMC Access to global market Product Safety Type Approved

Lab L

Lemon Rao

UK CA

TMC

Certificate – Сертификат – 證明書 – Certificat – 증명서 – شهادة

Shenzhen ZKT Technology Co., Ltd.
1/F, No. 101, Building B, No. 6, Tangwei Community Industrial Avenue,
Fuhai Street, Bao'an District, Shenzhen, China

Certificate of Compliance

Certificate Number: ZKT-25070215184C

Certificate's Holder	:	**Dongguan Yihong Hardware Electronics Co., Ltd Room 1106, No.2, Shangheng Road, Chang'an Town, Dongguan**
Manufacturer	:	**Dongguan Yihong Hardware Electronics Co., Ltd Room 1106, No.2, Shangheng Road, Chang'an Town, Dongguan**
Trade Mark	:	**N/A**
Product	:	**LED controller**
Model(s)	:	**YH-6183 YH-252, YH-284, YH-290, YH-287, YH-358, YH-360, YH-6180, YH-6184**

Requirement	Standard	Report No.
Art.3.1(a) Safety	BS EN IEC 62368-1:2024+A11:2024	ZKT-25070215185S
Art.3.1(a) Health	BS EN IEC 62311:2020 BS EN 50665:2017	ZKT-25070215184E-1
Art.3.1(b) EMC	ETSI EN 301 489-1 V2.2.3 (2019-11) ETSI EN 301 489-17 V3.3.0 (2024-07)	ZKT-25070215184E-2
Art.3.2 Radio	ETSI EN 300 328 V2.2.2 (2019-07)	ZKT-25070215184E-3

This Attestation of Compliance is issued on a voluntary basis for electrical equipment below the voltage limits of Radio Equipment Directive (RED) 2014/53/EU. The essential requirement are fulfilled accordingly based on the technical specifications applicable at the time of issuance.

UK CA

Shenzhen ZKT Technology Co., Ltd.
Approved
Manager
Jul. 07, 2025

This Certificate of Conformity is based on single evaluation of the submitted sample(s) of the above mentioned product. It does not imply an assessment of the whole product and relevant . Directives to be observed.

精准检测
PRECISE TESTING

CERTIFICATE OF CONFORMITY

No.: PTC25102309602C-EN01V02

Applicant	:	**Dongguan Yihong Hardware electronics Co., LTD**
Address	:	**Room 901, No. 2, Shangheng Road, Chang'an Town, Dongguan City, Guangdong Province, 523880 China**
Manufacturer	:	**Dongguan Yihong Hardware electronics Co., LTD**
Address	:	**Room 901, No. 2, Shangheng Road, Chang'an Town, Dongguan City, Guangdong Province, 523880 China**
Product Name	:	**LED Controler**
Model No.	:	**YH-289,YH-980 ,YH-284 ,YH-917 ,YH-818,YH-816,YH-6181,YH-358**

The submitted sample of the above equipment has been tested and found to comply with the following European Directive:

RoHS Directive 2011/65/EU & EU No.2015/863

The standard(s) used for showing compliance with the essential requirements:

Applicable Standard(s)	Test Report(s) Number
IEC 62321-1:2013, IEC 62321-2:2021 IEC 62321-3-1:2013, IEC 62321-3-2:2020 IEC62321-4: 2013+AMD1:2017 IEC 62321-5:2013 IEC 62321-6:2015, IEC 62321-7-1: 2015 IEC 62321-7-2: 2017, IEC 62321-8:2017	**PTC25102309602C-EN01V02**

This certificate is part of the full test report(s) and should be read in conjunction with it. This certificate is based on an evaluation of one sample of above mentioned product. It does not imply assessment of the production of the product. Without the written approval of Precise Testing & Certification (Guangdong) Co., Ltd., this certificate is not permitted to be reproduced, except in full. It is not permitted to use the test lab's logo.

RoHS

PRECISE TESTING & CERTIFICATION (GUANGDONG) CO., LTD.

Jacky Ou
Manager
Date:Dec. 11, 2025

Precise Testing & Certification (Guangdong) Co., Ltd.
Building 1, No.6, Tongxin Road, Dongcheng Street,
Dongguan, Guangdong, China
Tel: 86 769 38808222 Web:www.ptc-testing.com
Mail: inquiry@ptc-testing.com