INSTALLATION
Product Manual

Version: 590053US-01-26A-FH

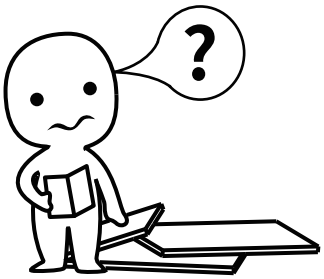

IMPORTANT INFORMATION!

please read the entire manual before starting to assemble and/or using this product.follow the manual thoroughly and keep it for further reference.

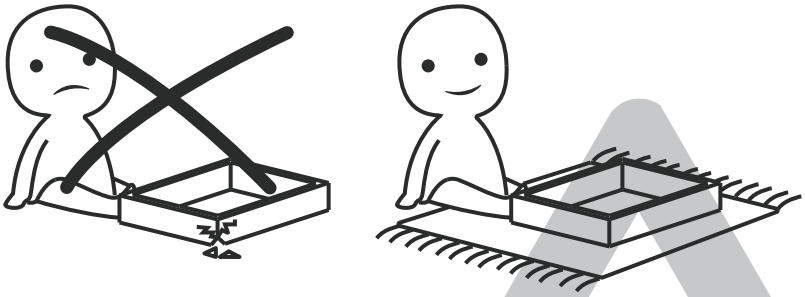

AVOID SCRATCHES!

In order to avoid scratching this furnuture should be assembled on a soft layer-could be a rug.

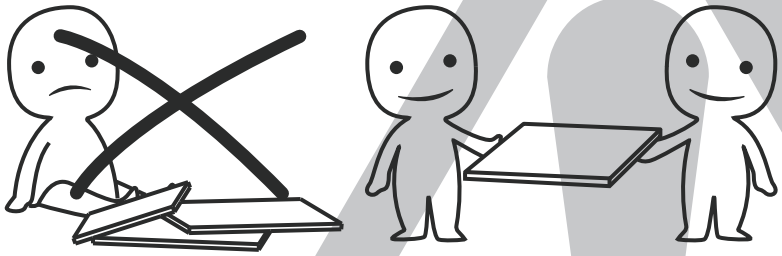

IMPROVE EFFICIENCY !

Try to find a partner to install with you, which can speed up the installation efficiency and shorten the time.

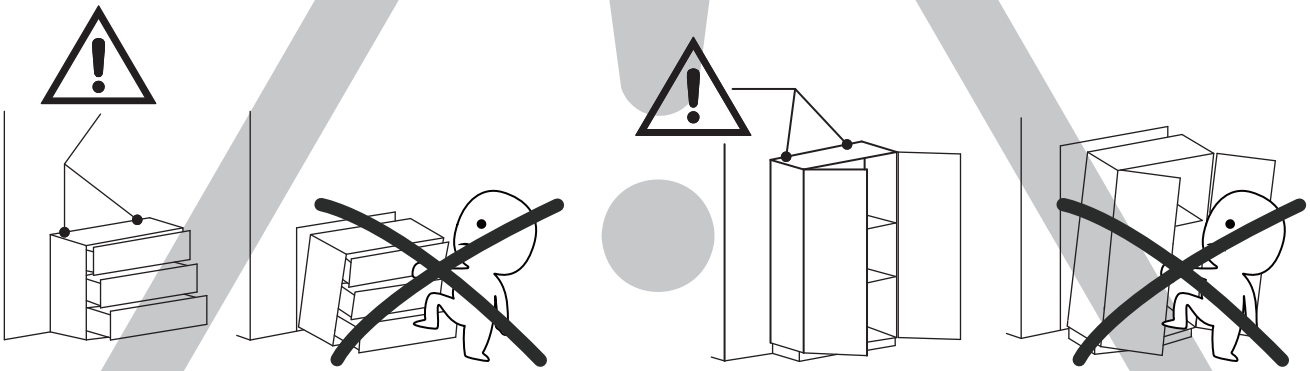

ANTI-TOPPLE WARNING !

Overturned furniture can cause serious or fatal crush injuries. To prevent tipping over, be sure to use the wall attachment, if not included with this product. Please purchase the wall attachment that fit your wall. If unsure, seek professional advice. Please read and follow each step of the instructions carefully.

IMPORTANT !

It is important that any product which is assembled using any kind of screw is re-tightened 2 weeks after assembly,and once every 3 months - in order to assure stability through-out the lifespan of the product.

For regular maintenance and cleaning of the product, for the frame, please use a rag dipped in neutral detergent to fully wipe it, and then dry it with a clean rag.For glass materials, wipe with a rag dampened with water glass cleaner, and then dry with a dry rag.

Do not use an electric screwdriver, and do not use too much force when installing, because the board is easy to break.

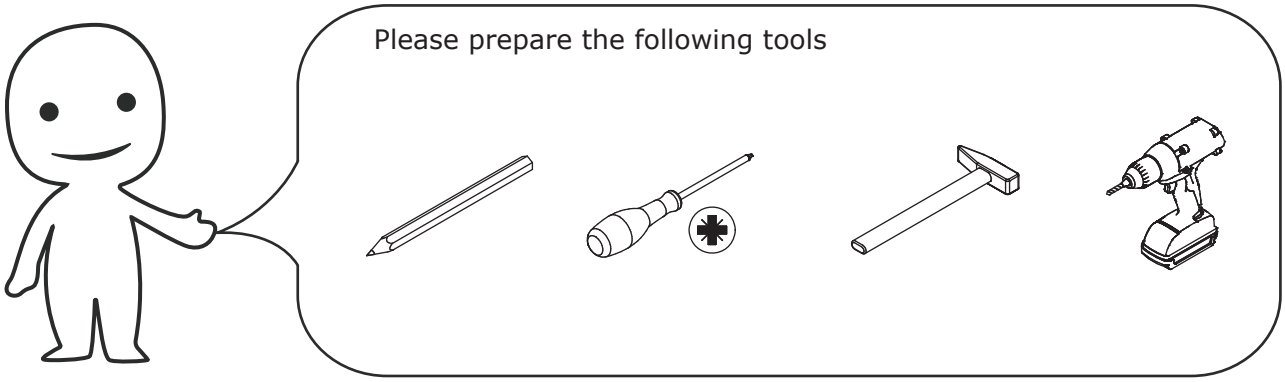



When installing, please carefully confirm whether each screw corresponds to the manual, accessories with similar shapes can be distinguished by size

A x 58+2	B x 58+2	C x 38+2	D x 96+4	E x 10+2
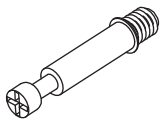 M6 x 35 mm	 ∅15 mm	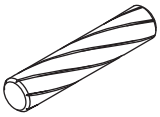 ∅8 x 30 mm	 M3.5 x 14 mm	 M4 x 35 mm
F x 4	**G x 18+2**	**H x 4**	**I x 5**	**J x 26+2**
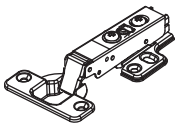	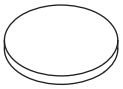 ∅20 mm	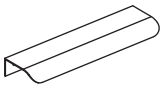	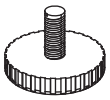	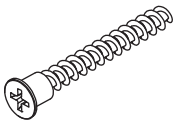 M5 x 38 mm
K x 3	**L x 50+4**	**M x 1**	**N x 4**	**O x 4+1**
	 M3.5 x 12 mm	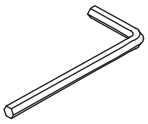 4#	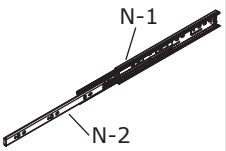 290 mm	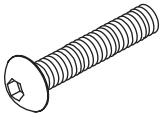 M6 x 40 mm
P x 8+1	**Q x 2**	**R x 8**	**S x 2**	**T x 2**
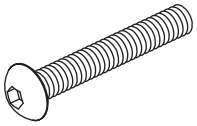 M6 x 50 mm	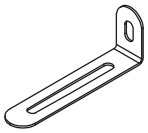		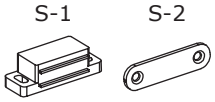	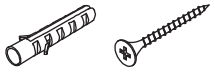
U x 22	**V x 4**	**W x 4**	**X x 4**	**Y x 3**
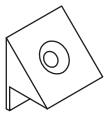		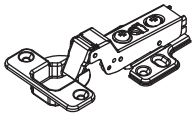	 M6 x 12 mm	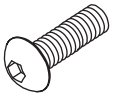 M6 x 30 mm

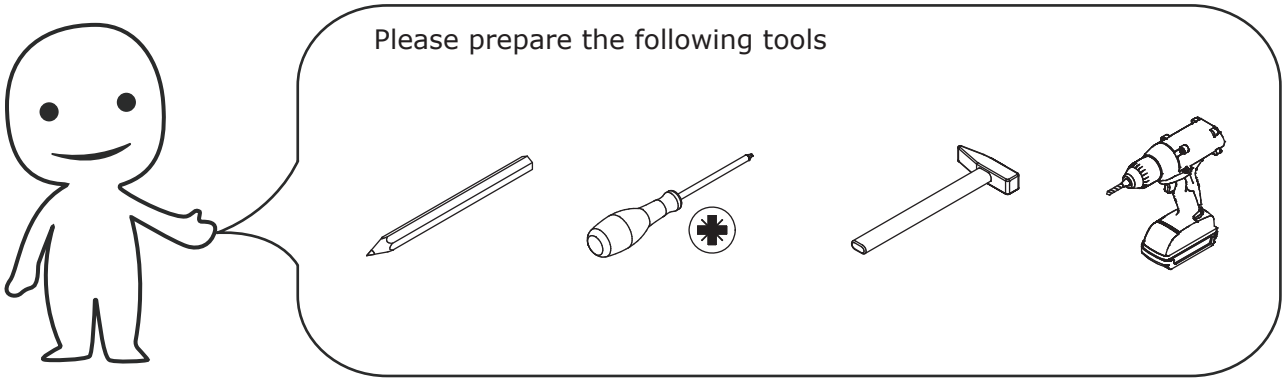

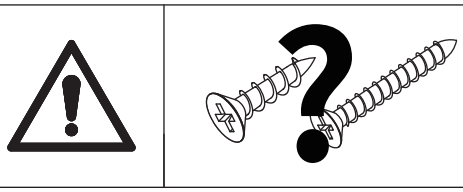

When installing, please carefully confirm whether each screw corresponds to the manual, accessories with similar shapes can be distinguished by size

Z x 2
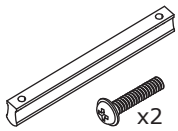

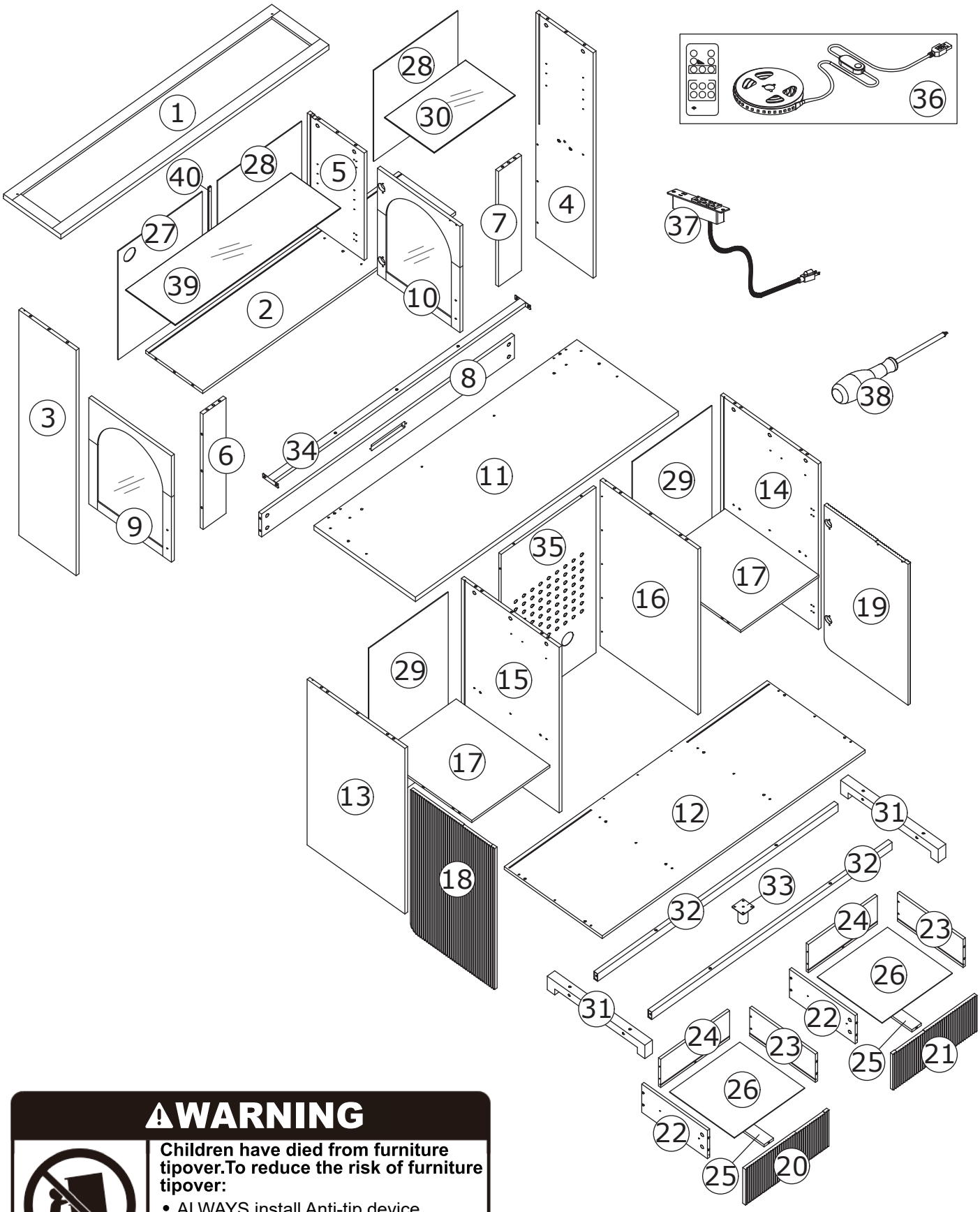

⚠WARNING



Children have died from furniture tipover.To reduce the risk of furniture tipover:

- ALWAYS install Anti-tip device provided.
- NEVER put a TV on this product.
- NEVER allow children to stand,climb or hang on drawers,doors,or shelves.
- NEVER open more than one drawer at a time.
- Place heaviest items in the lowest drawers.

This is a permanent label.
Do not remove!

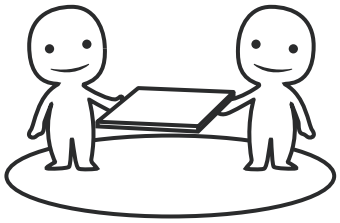

ASSEMBLED BY 2 ADULTS

Sllides Must Be Separated Before Assembly.
After Separated, Set Aside Until Needed for Assembly.

Las diapositivas deben separarse antes del montaje.
Después de la separación, déjelo a un lado hasta que sea necesario.

Les glissières doivent être séparées avant I'assemblage.
Après la séparation, mettez de côté jusqu'au moment de I'assemblage.

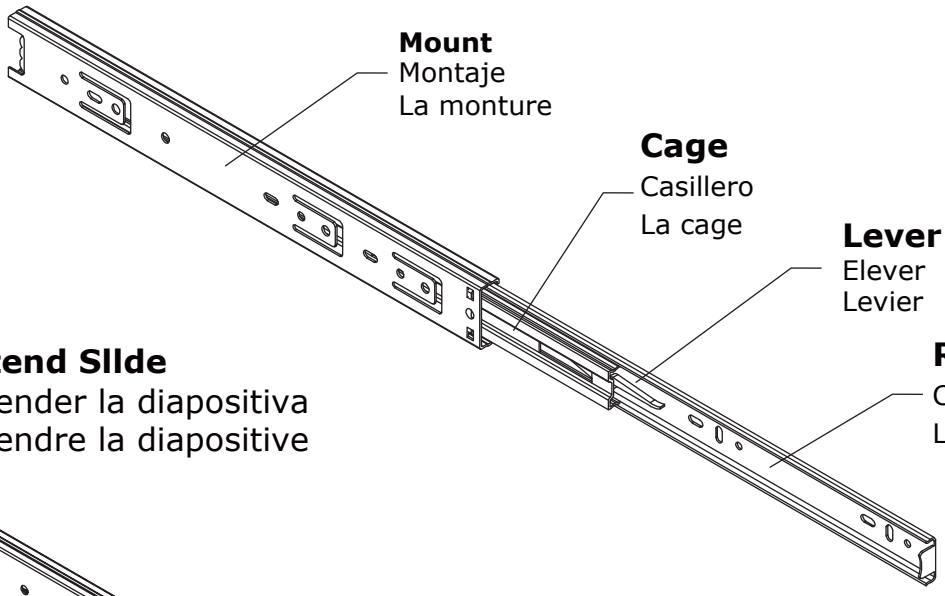

STEP 1: Extend Sllde
Extender la diapositiva
Extendre la diapositive

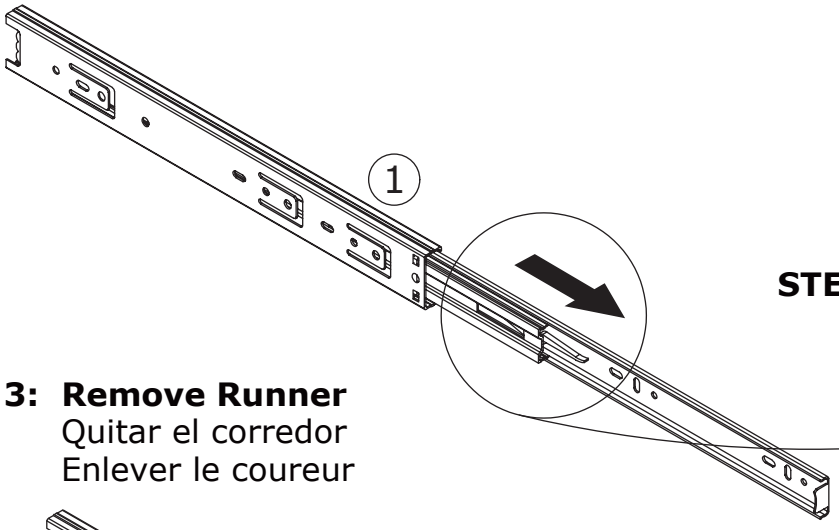

STEP 2: Push Lever UP
Empujar hacia arriba
Lever le levier

STEP 3: Remove Runner
Quitar el corredor
Enlever le coureur

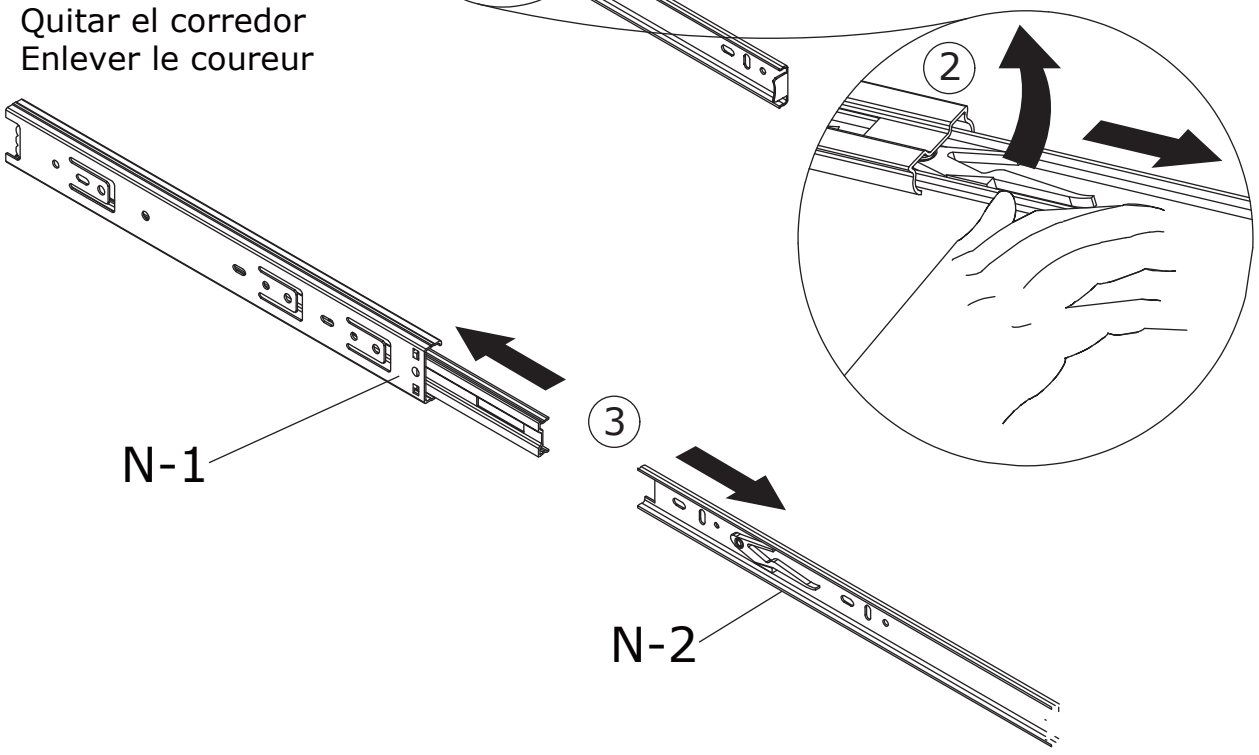

1

A x 4	C x 1	J x 2	M x 1	Y x 3	
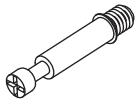	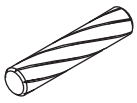	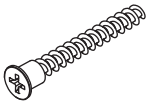	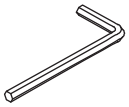		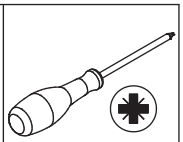
M6 x 35 mm	∅8 x 30 mm	M5 x 38 mm	4#	M6 x 30 mm	

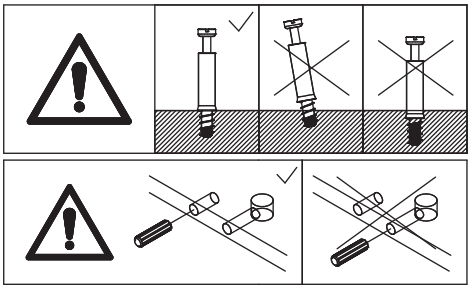

Connect board 2 to board 5 using dowel (C), then secure them with screw (J).
Fix iron pipe 34 to board 2 using screw (Y).
Screw eccentric rod (A) onto board 2.

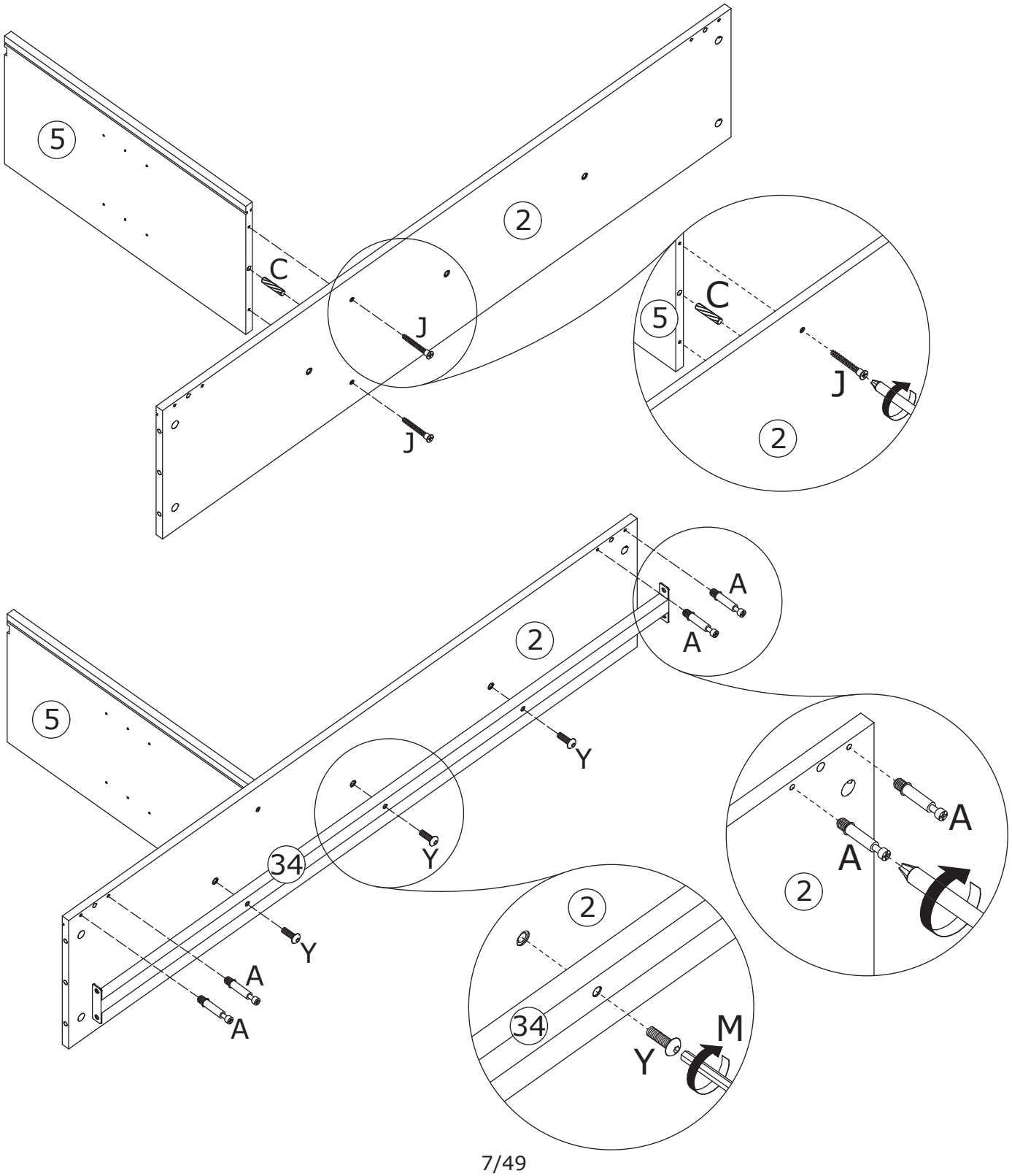

2

A x 14

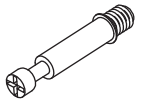

M6 x 35 mm

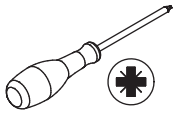

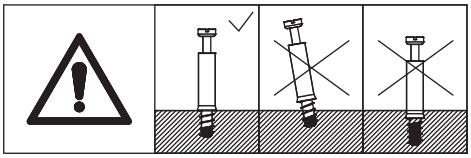

Screw eccentric rod (A) onto board 3 and 4.

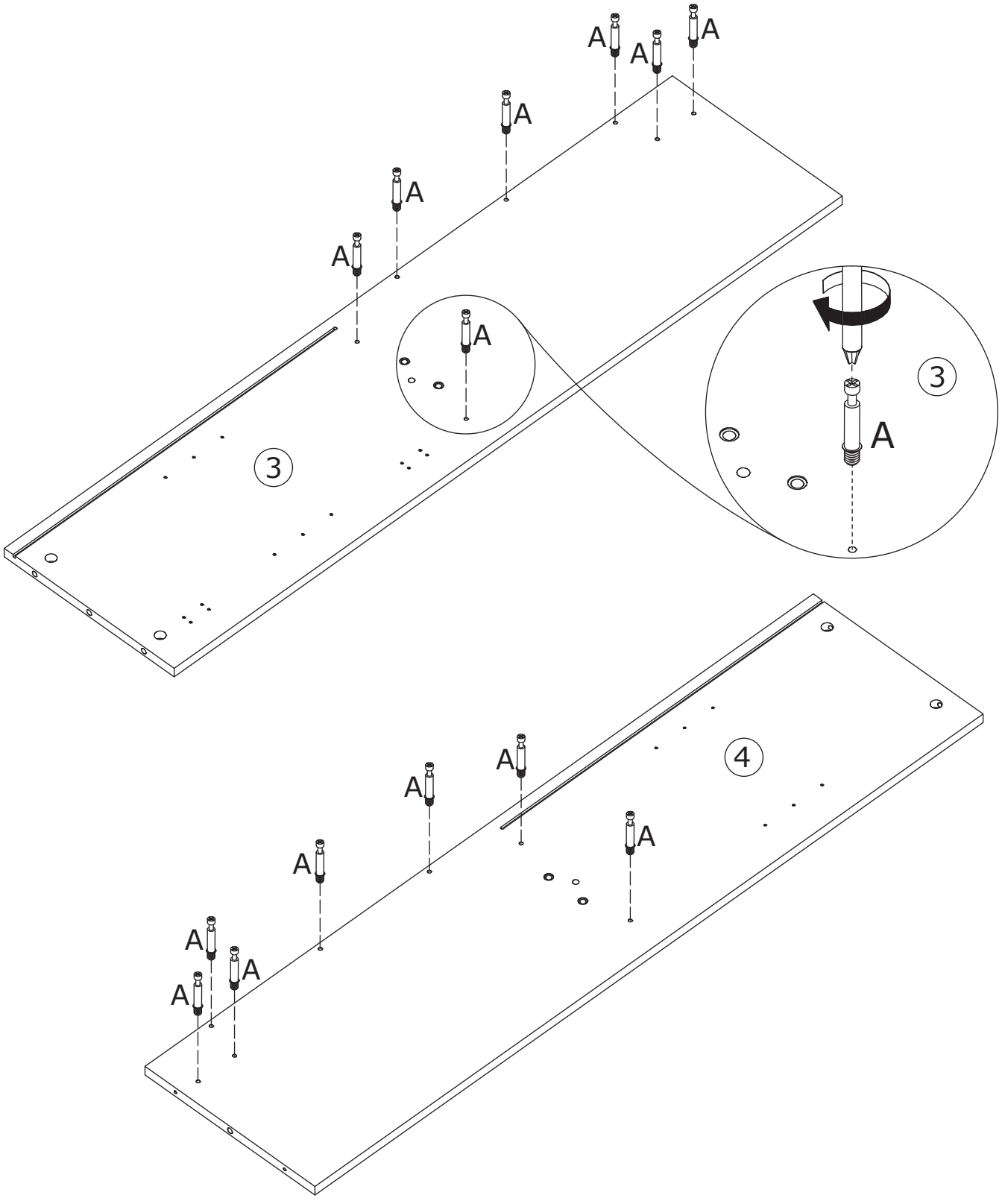

3

B x 2	C x 1	
	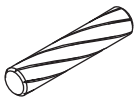	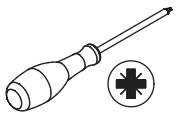
∅15 mm	∅8 x 30 mm	

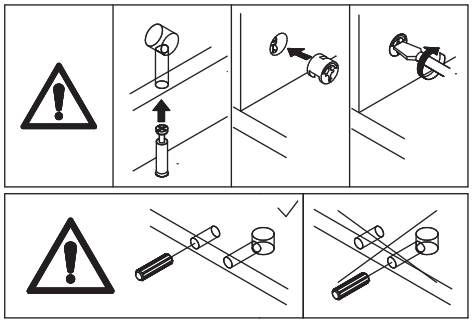

Connect board 2 to board 6 using dowel (C), then tighten by turning eccentric cam (B) clockwise.

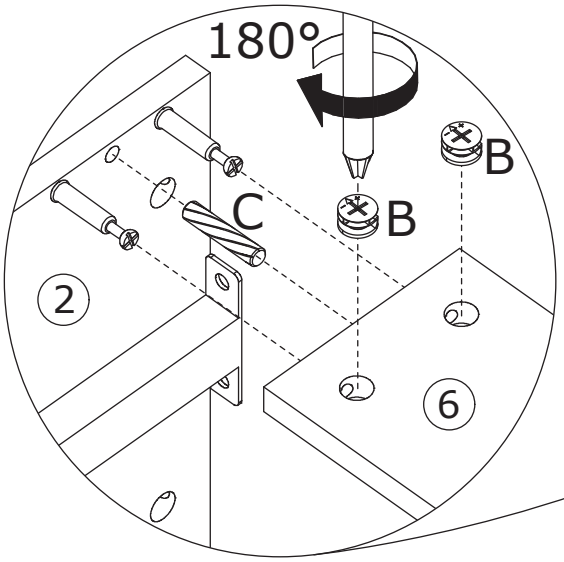

Note: Support the board to prevent falling and damaging the hole position.

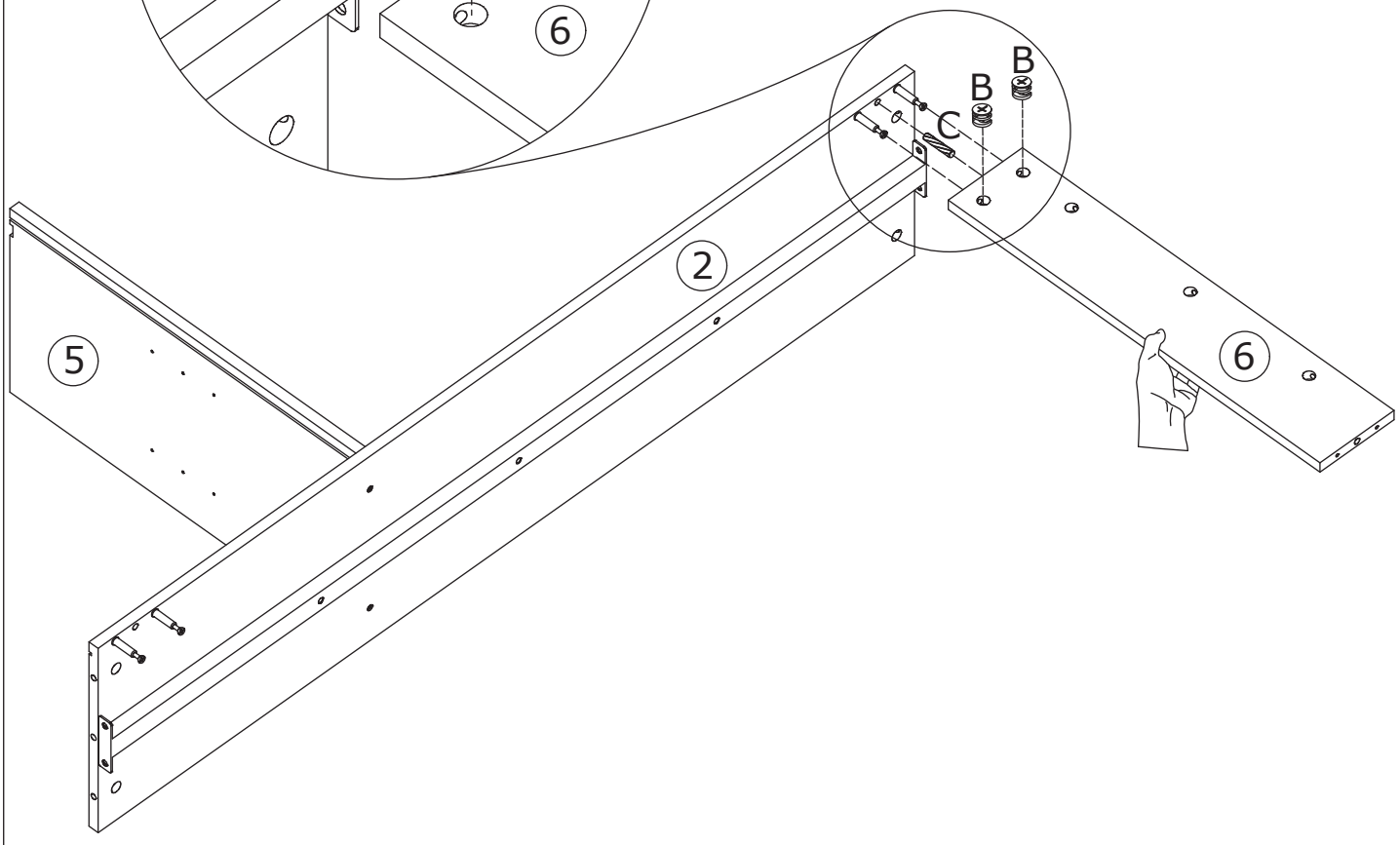

4

B x 5	C x 1	M x 1	X x 2	
	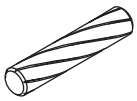	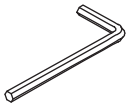		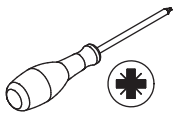
∅15 mm	∅8 x 30 mm	4#	M6 x 12 mm	

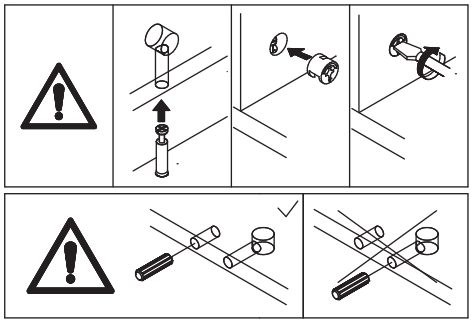

Connect board 2 and 6 to board 3 using dowel (C), then tighten by turning eccentric cam (B) clockwise.
Then, secure iron pipe 34 to board 3 using screw (X).

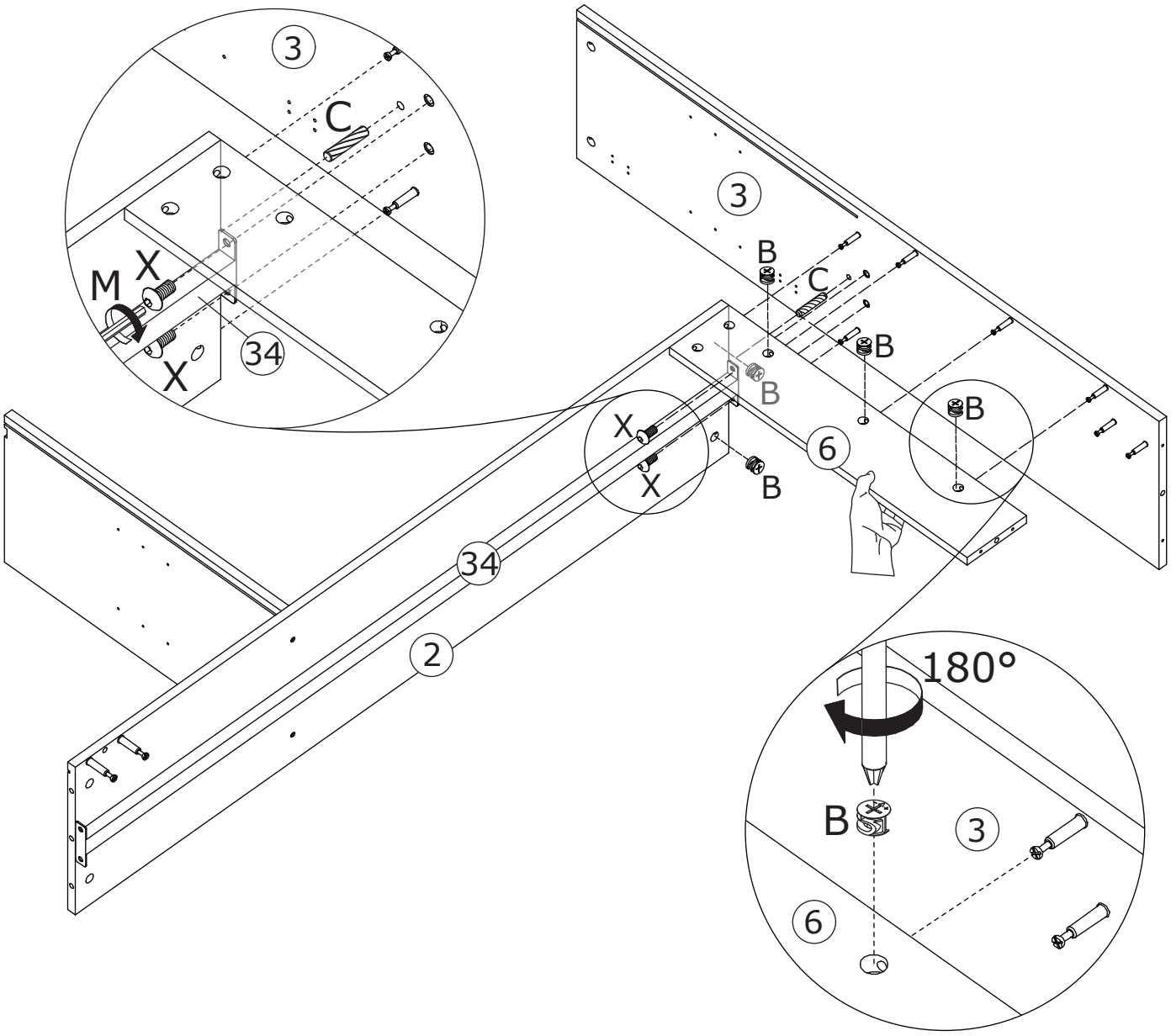

5

B x 2	C x 1	
	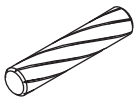	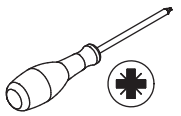
∅15 mm	∅8 x 30 mm	

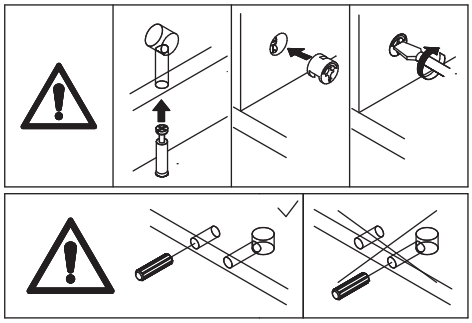

Connect board 7 to board 2 using dowel (C), then tighten by turning eccentric cam (B) clockwise.

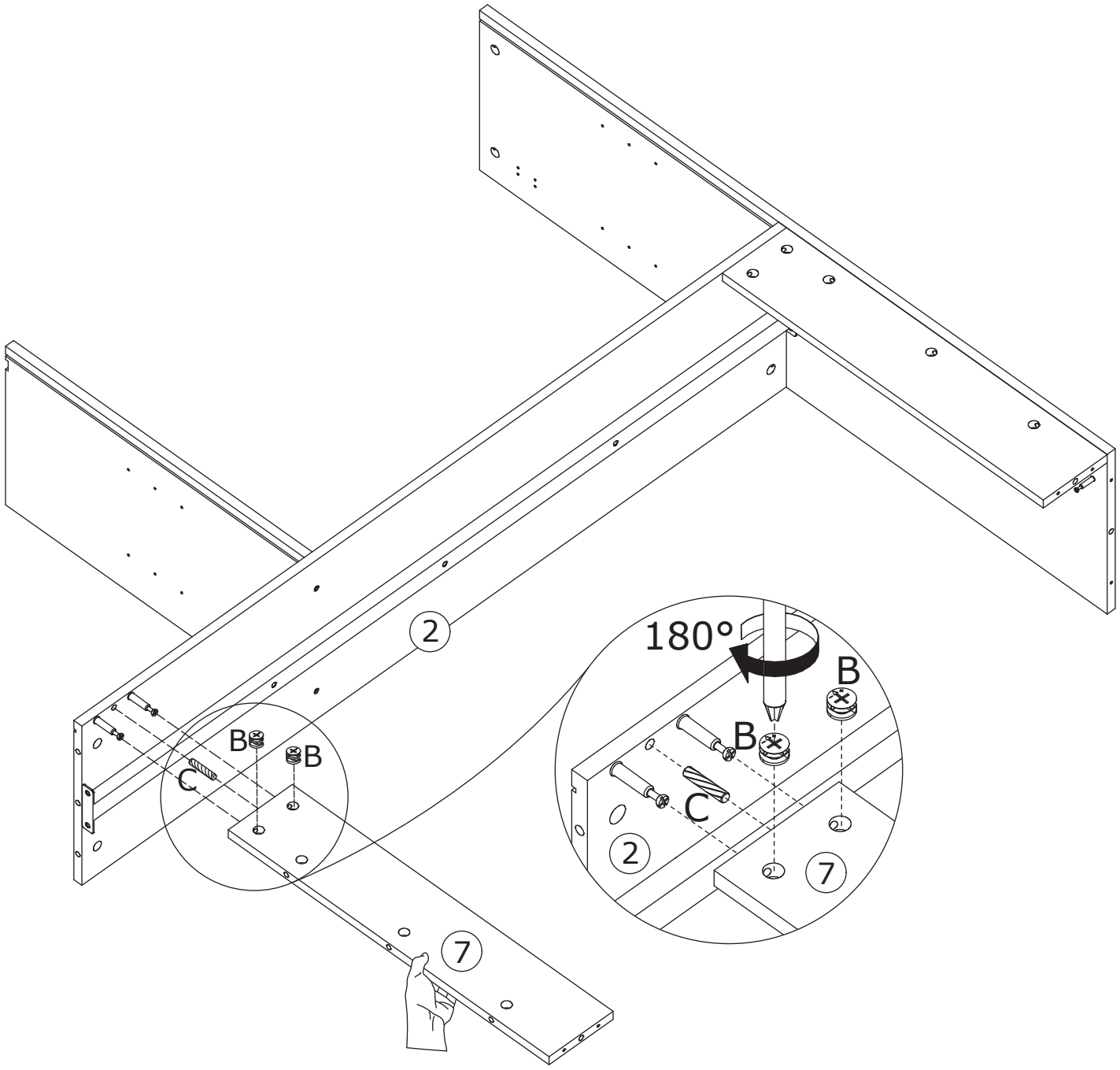

6

B x 2	G x 2	
∅15 mm	∅20 mm	

Connect board 8 to board 3, then tighten by turning eccentric cam (B) clockwise.

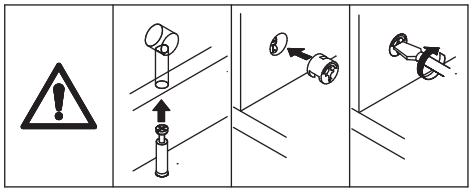

Note: Support the boards to prevent falling and damaging the hole position.

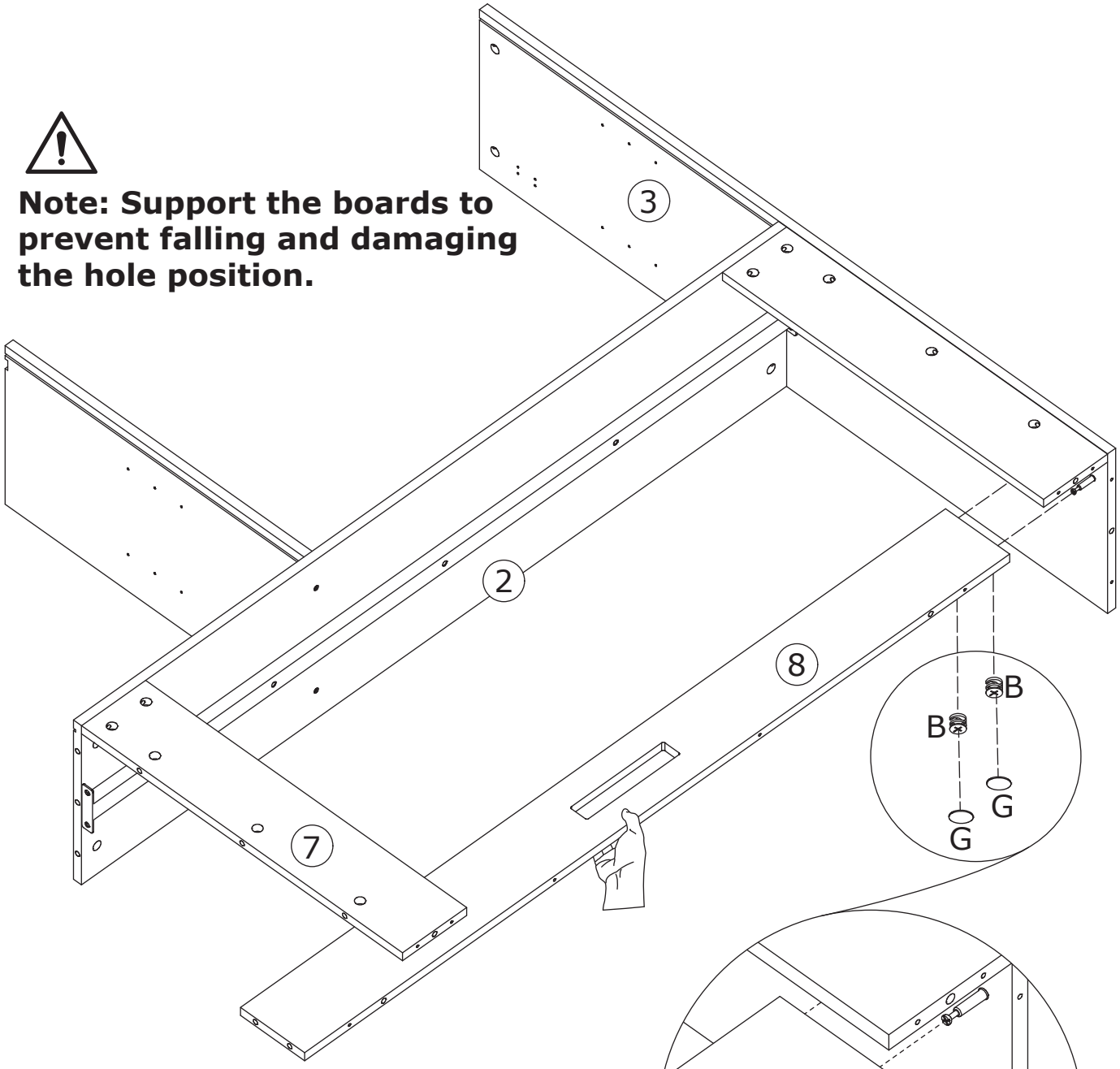

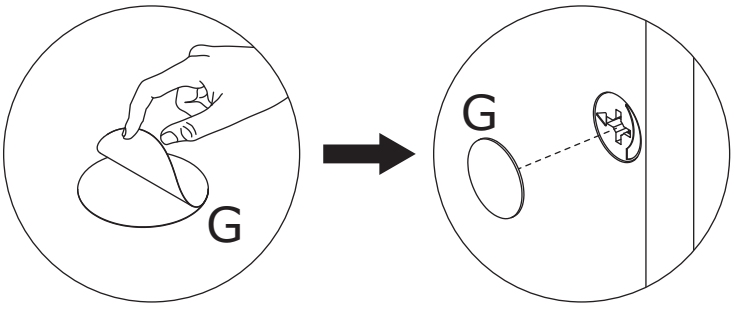

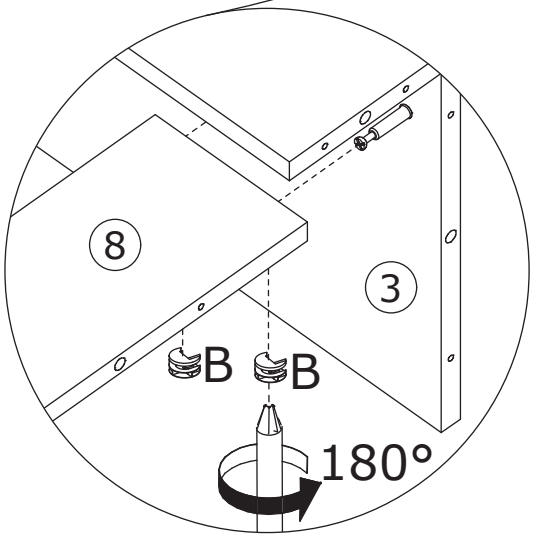

7

B x 7	C x 1	G x 2	M x 1	X x 2	
∅15 mm	∅8 x 30 mm	∅20 mm	4#	M6 x 12 mm	

Connect board 4 to boards 2, 7, and 8 using dowel (C), then tighten by turning eccentric cam (B) clockwise.
Then, secure iron pipe 34 and board 4 using screw (X).

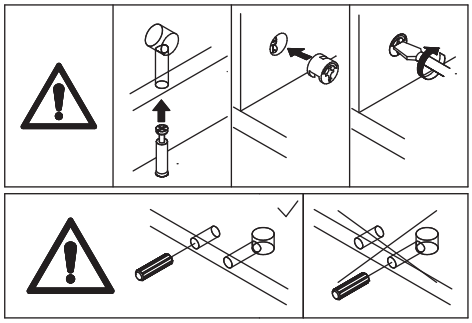

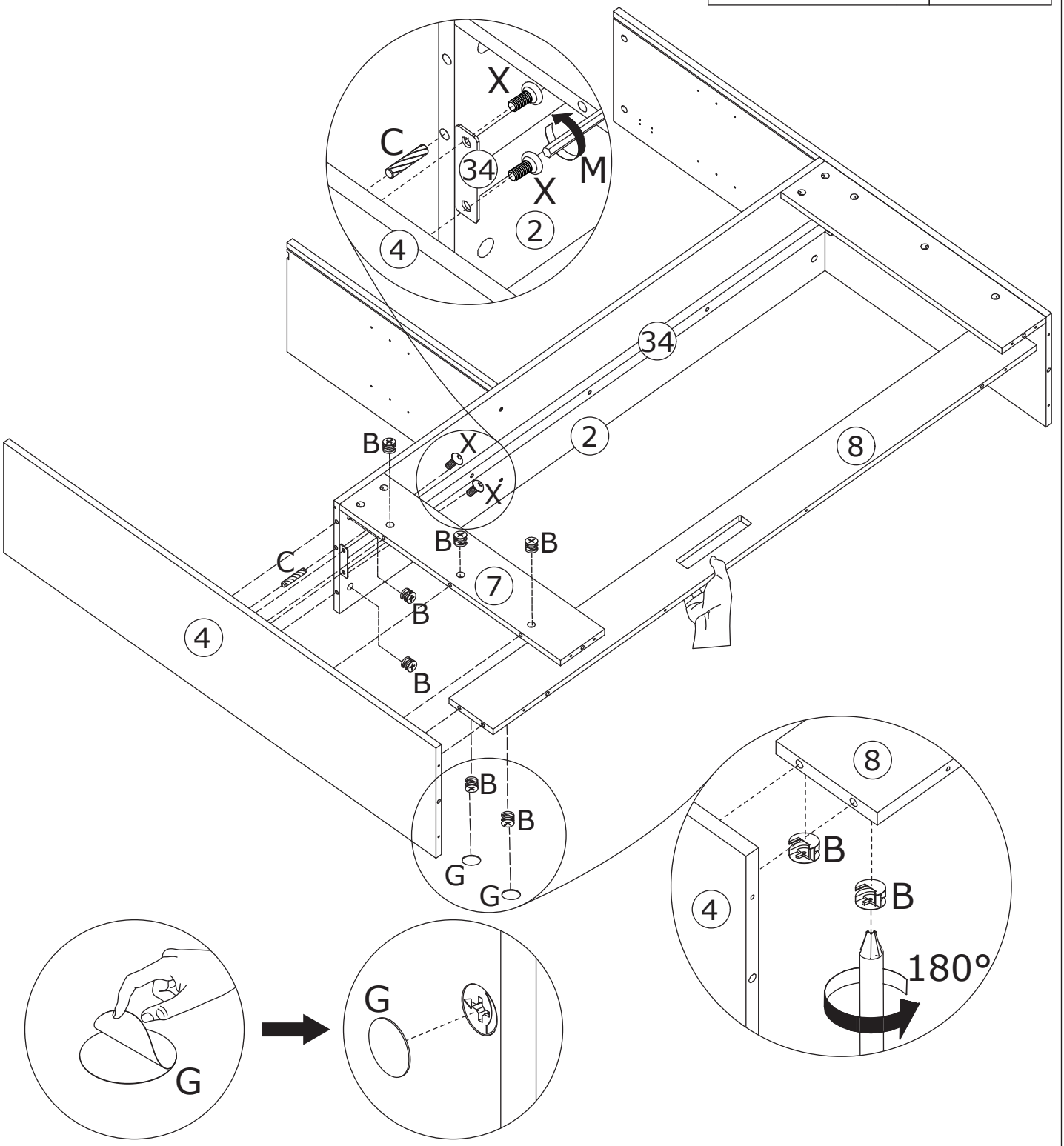

8

K x 1



Install cable grommet (K) onto board 27.

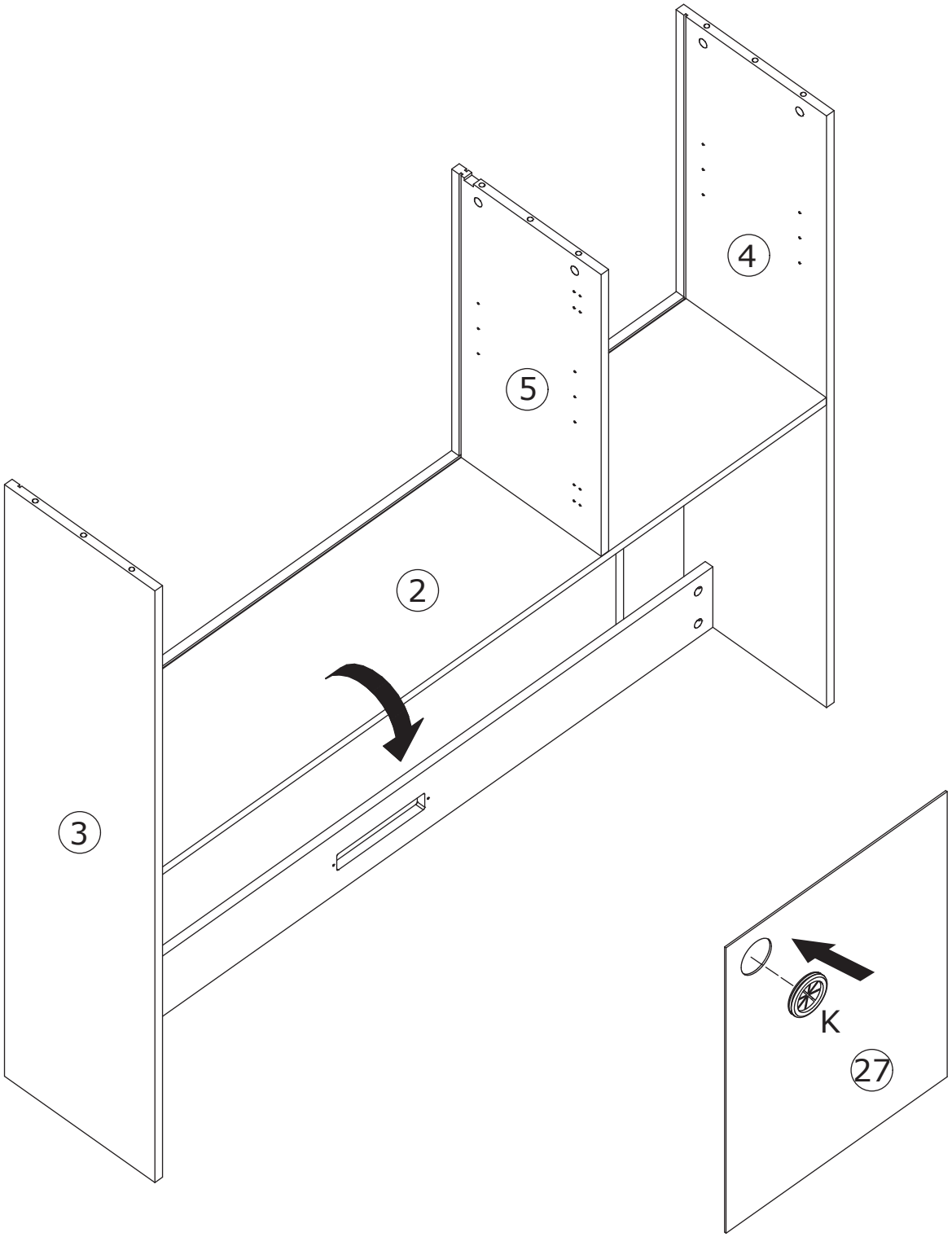

9

A x 6	D x 4	S x 2	
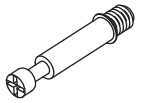 M6 x 35 mm	 M3.5 x 14 mm	S-1 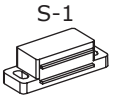	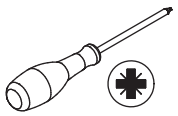

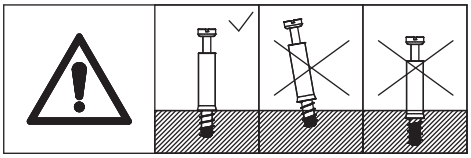

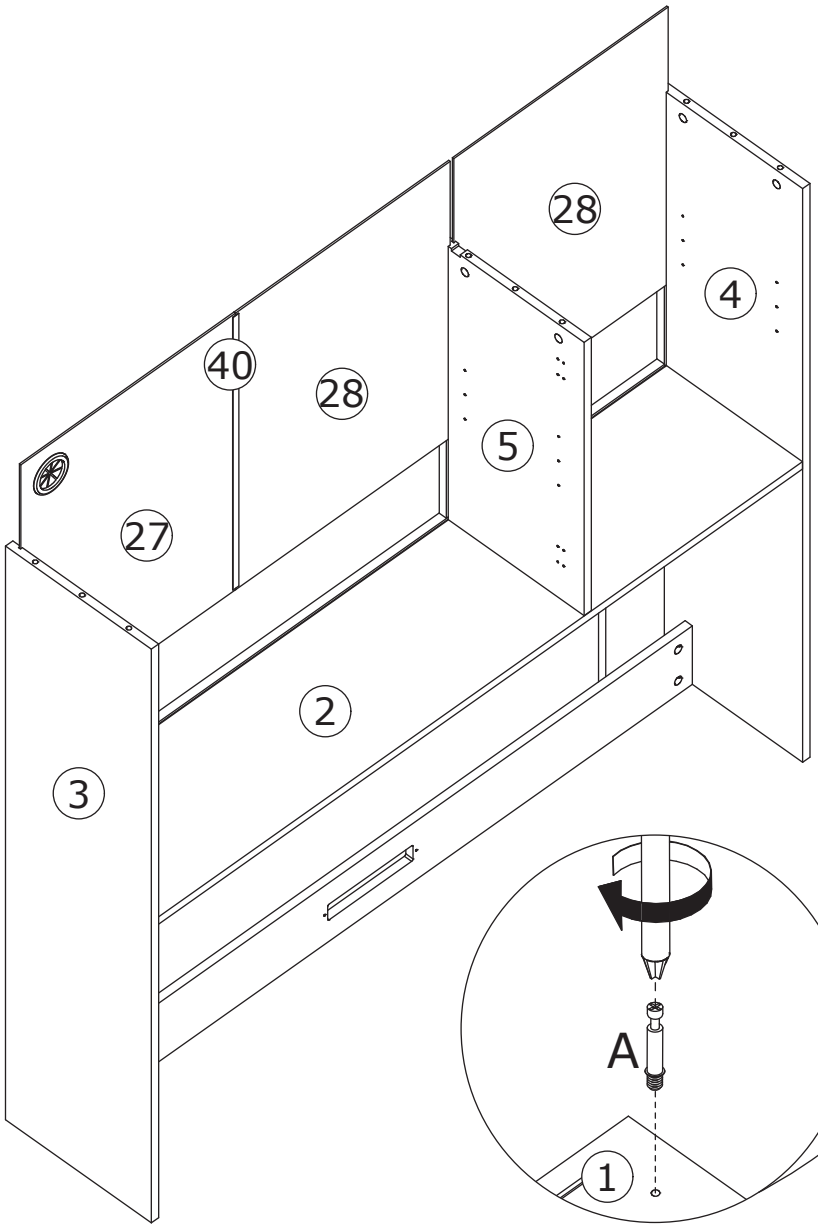

Insert boards 27, 28, and strip 40 along the available slots.
Screw eccentric rod (A) onto board 1.
Secure magnetic catch (S) to board 1 using screw (D).

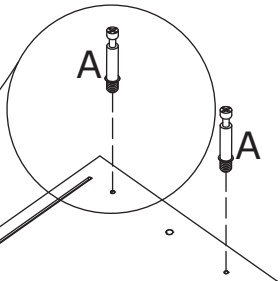

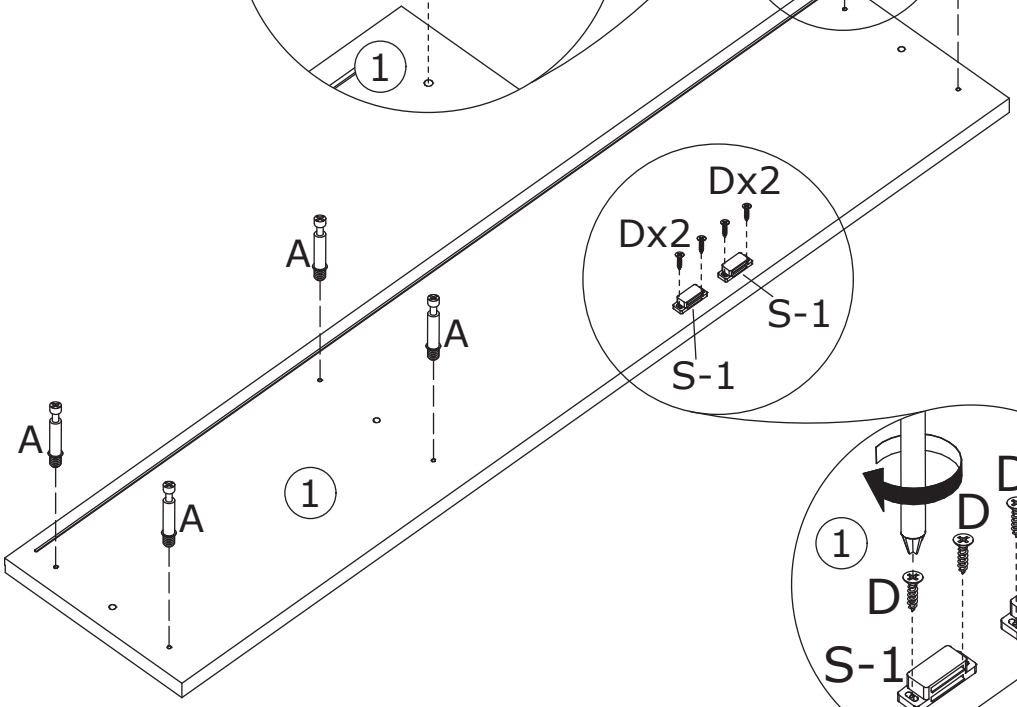

10

B x 6	C x 3	G x 6	
	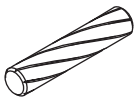	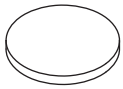	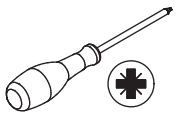
∅15 mm	∅8 x 30 mm	∅20 mm	

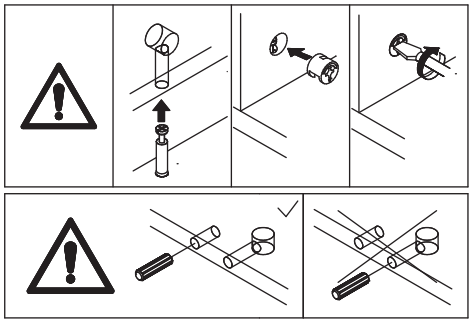

Connect board 1 to board 3, 5, and 4 using dowel (C), then tighten by turning eccentric cam (B) clockwise.

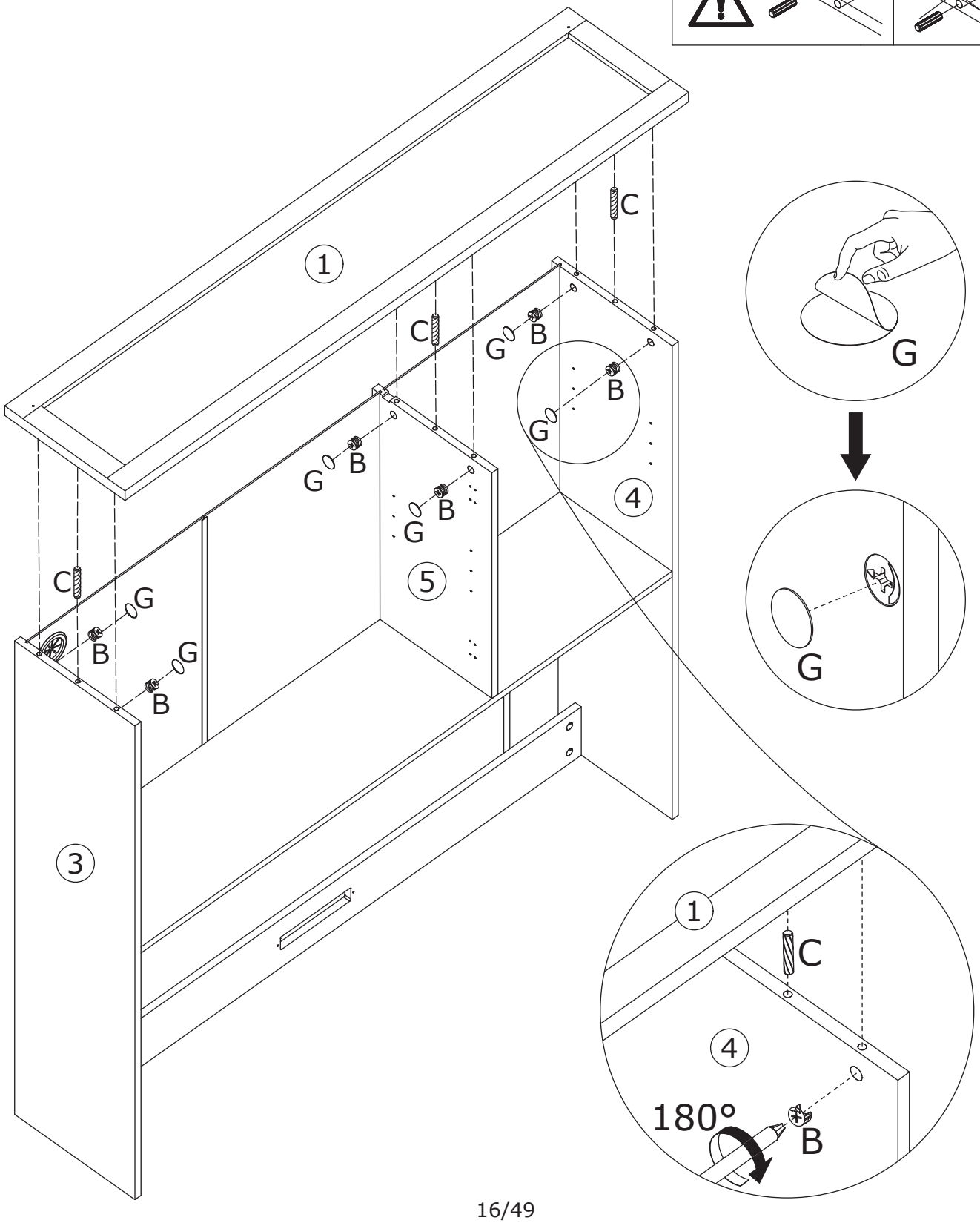

11

D x 12	Q x 2	U x 10	
 M3.5 x 14 mm	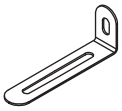	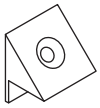	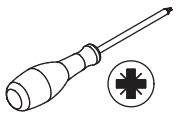

If the unit needs to be mount to a wall later, leave a gap of at least 6" from the wall.

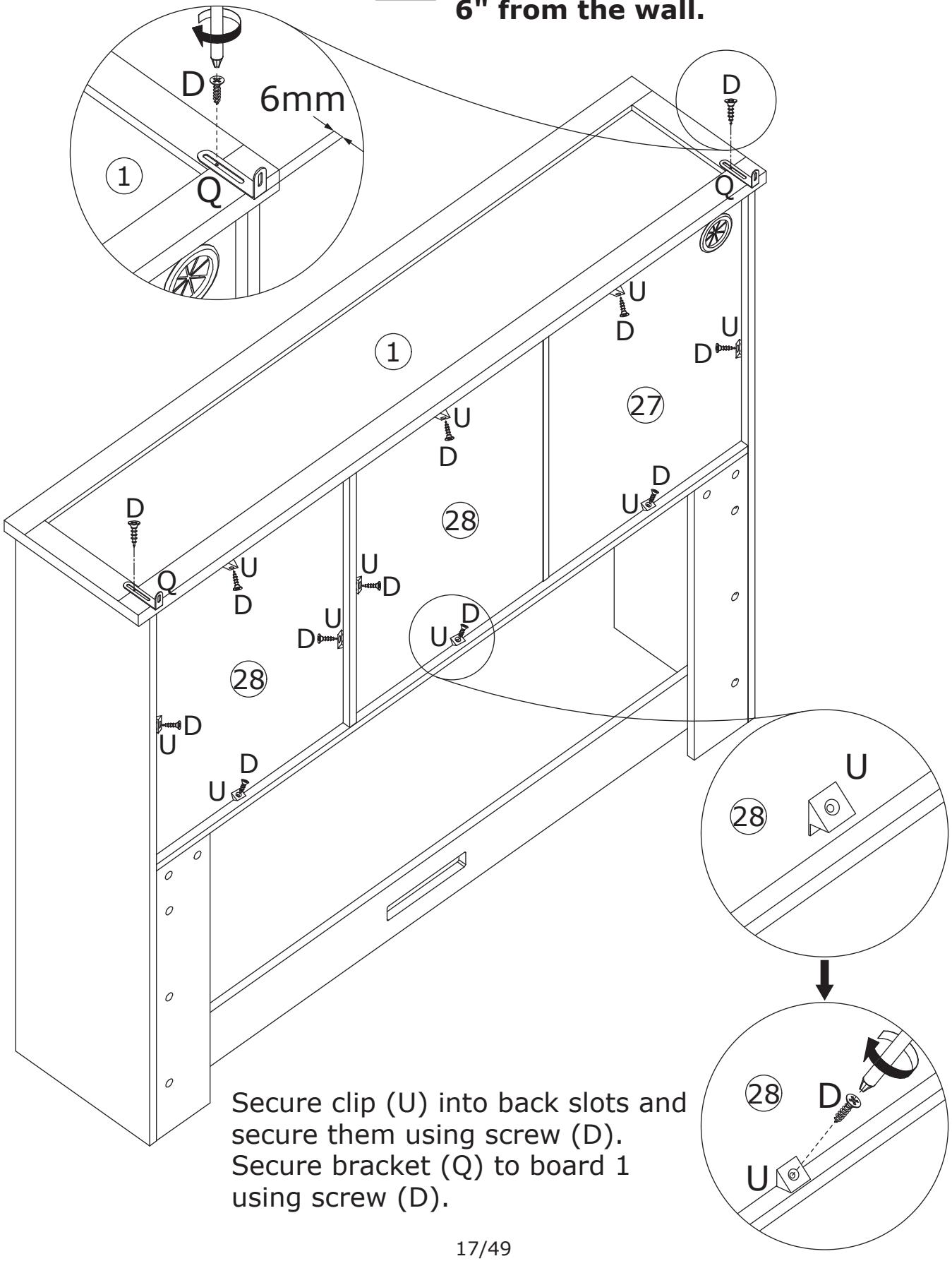

Secure clip (U) into back slots and secure them using screw (D).
Secure bracket (Q) to board 1 using screw (D).

12

D x 4	V x 4	
 M3.5 x 14 mm		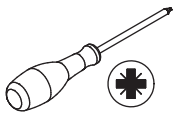

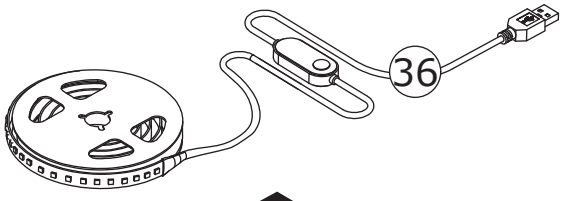

Peel off the protective film from the LED strip 36, then route it through the slot on board 5 and attach it to board 1.
Then, secure the LED strip to board 1 using buckle (V) and screw (D).
Finally, route the USB plug of the LED strip 36 through the cable grommet K.

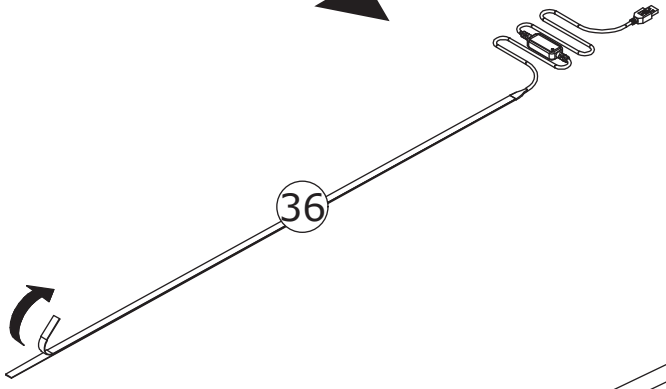

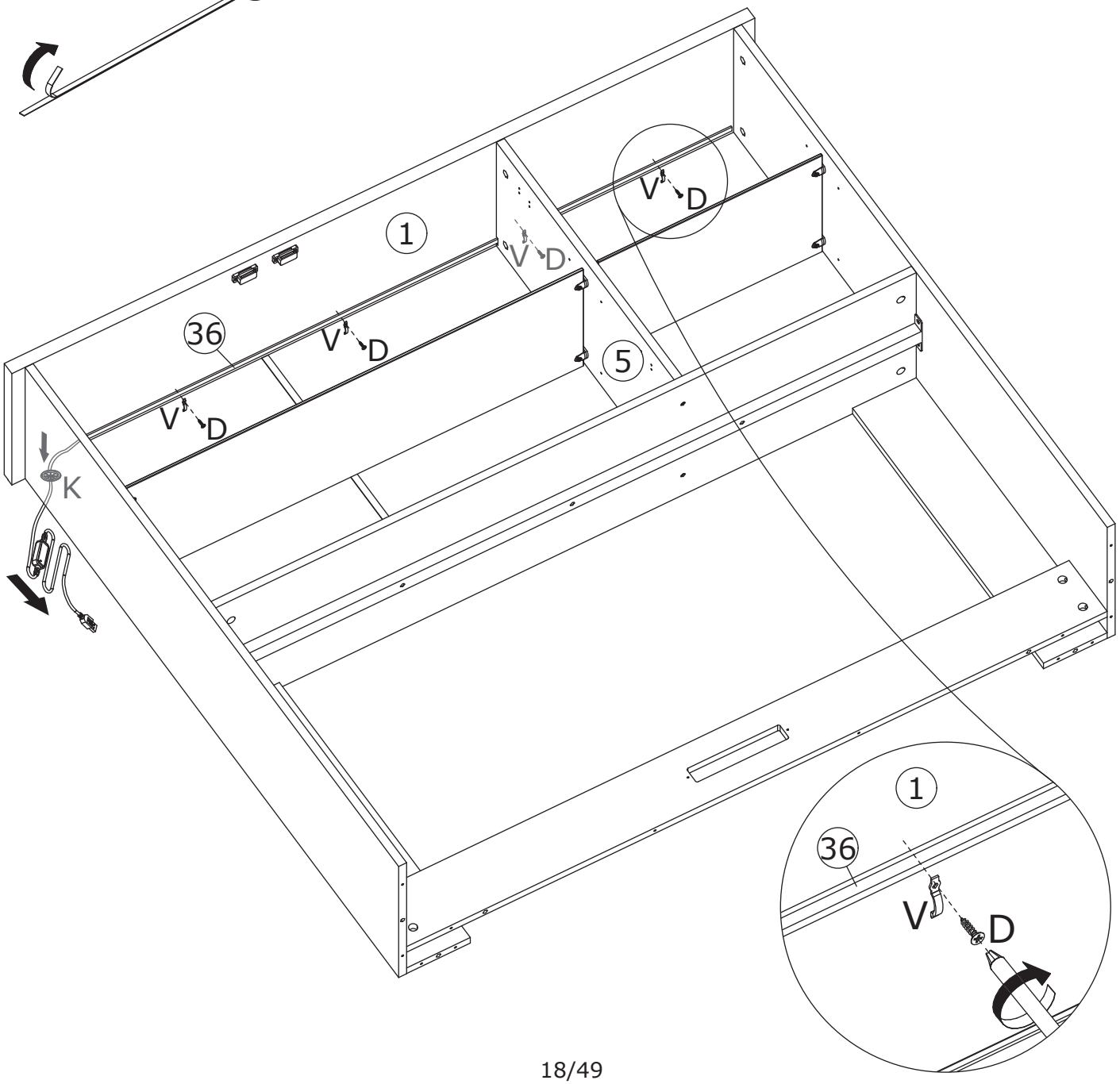

13

D x 8	R x 8	
 M3.5 x 14 mm		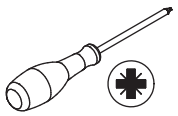

Secure glass clip (R) to board 3, 4, and 5 using screw (D).

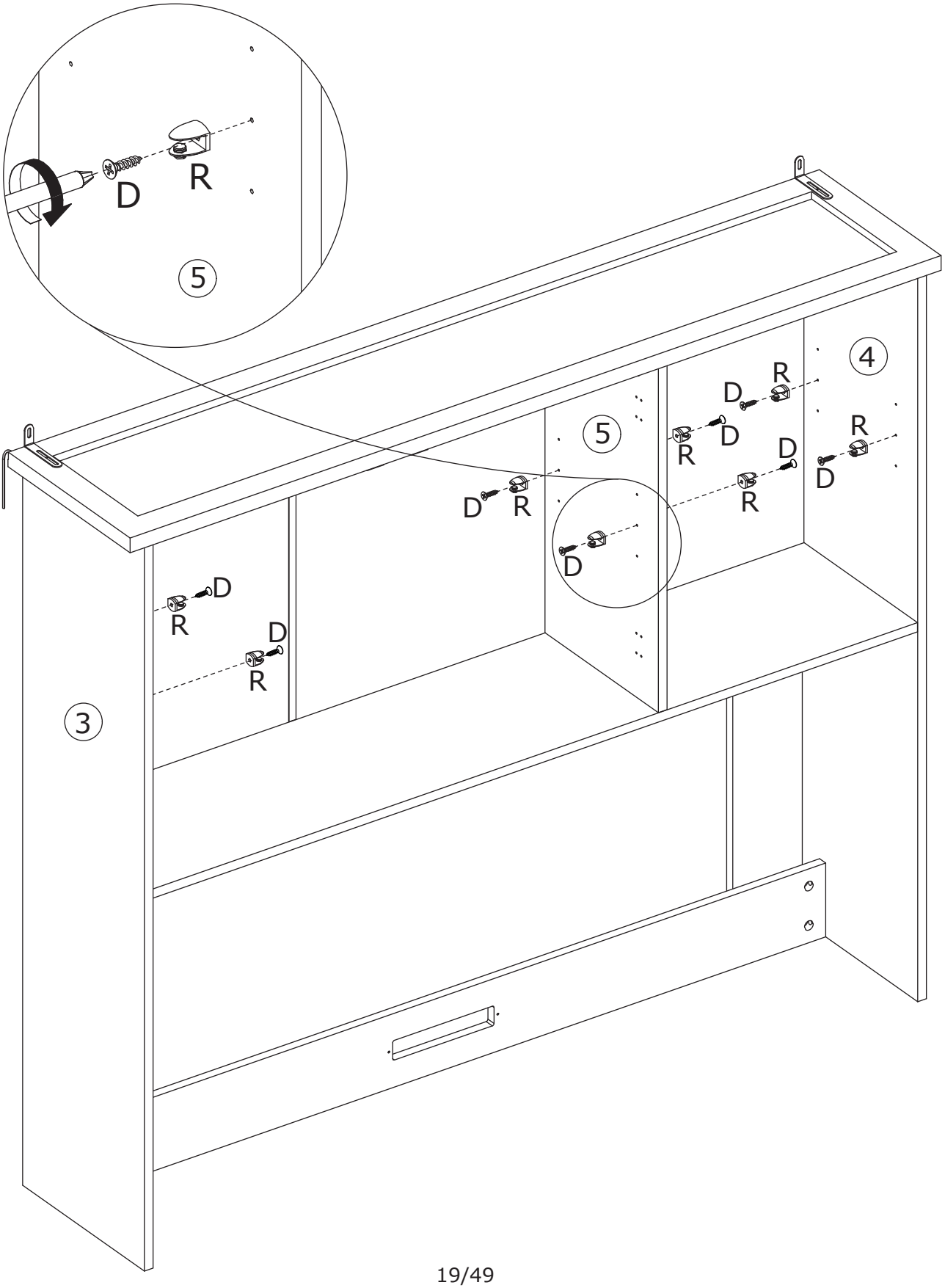

14

Insert glass panels 30 and 39 into the slots of the glass clips, then tighten the screws.

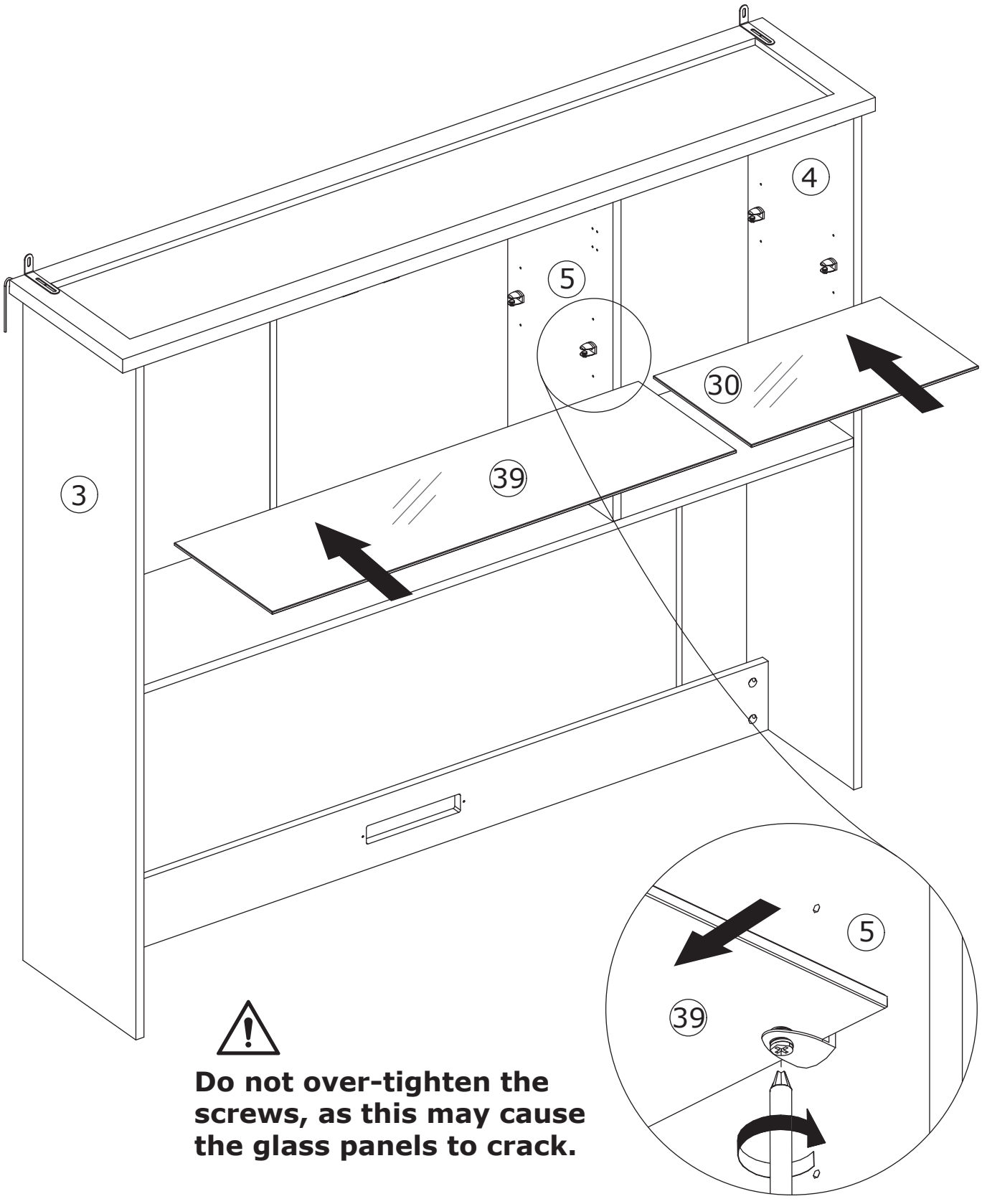

Do not over-tighten the screws, as this may cause the glass panels to crack.

15

Pay attention to the difference between the middle parts of the two types of door hinges.

- The curved hinges(W) are used on the **top** door plates.
- The full coverage hinges(F) are used on the **lower** door plates.

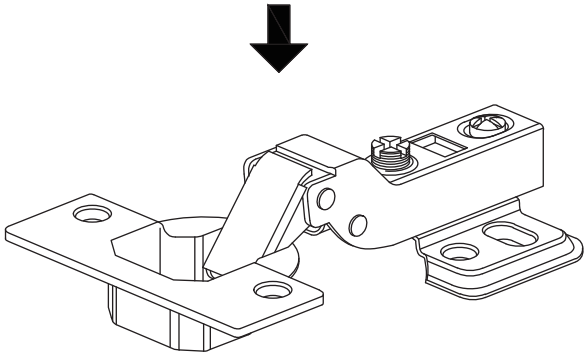

W

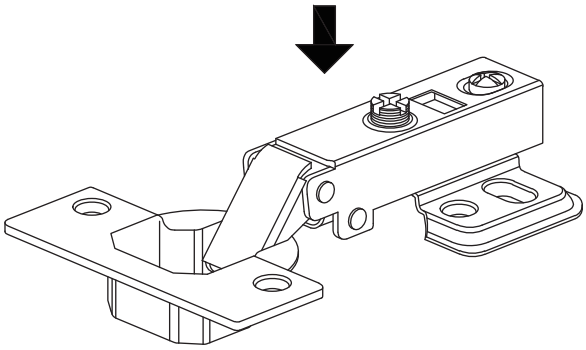

F

16

D x 12	S x 2	W x 4	Z x 2	
 M3.5 x 14 mm	S-2 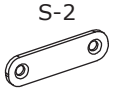	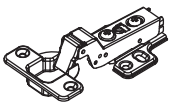	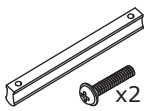 x2	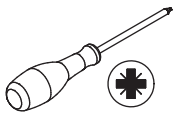

Secure hinge (W) to board 9 and 10 using screw (D).
Secure iron sheet (S) using screw (D).
Secure handle (Z) to board 9 and 10.

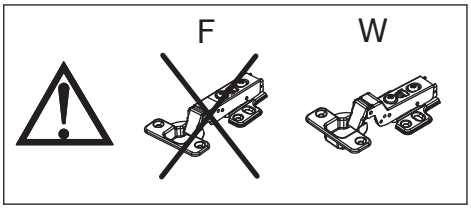

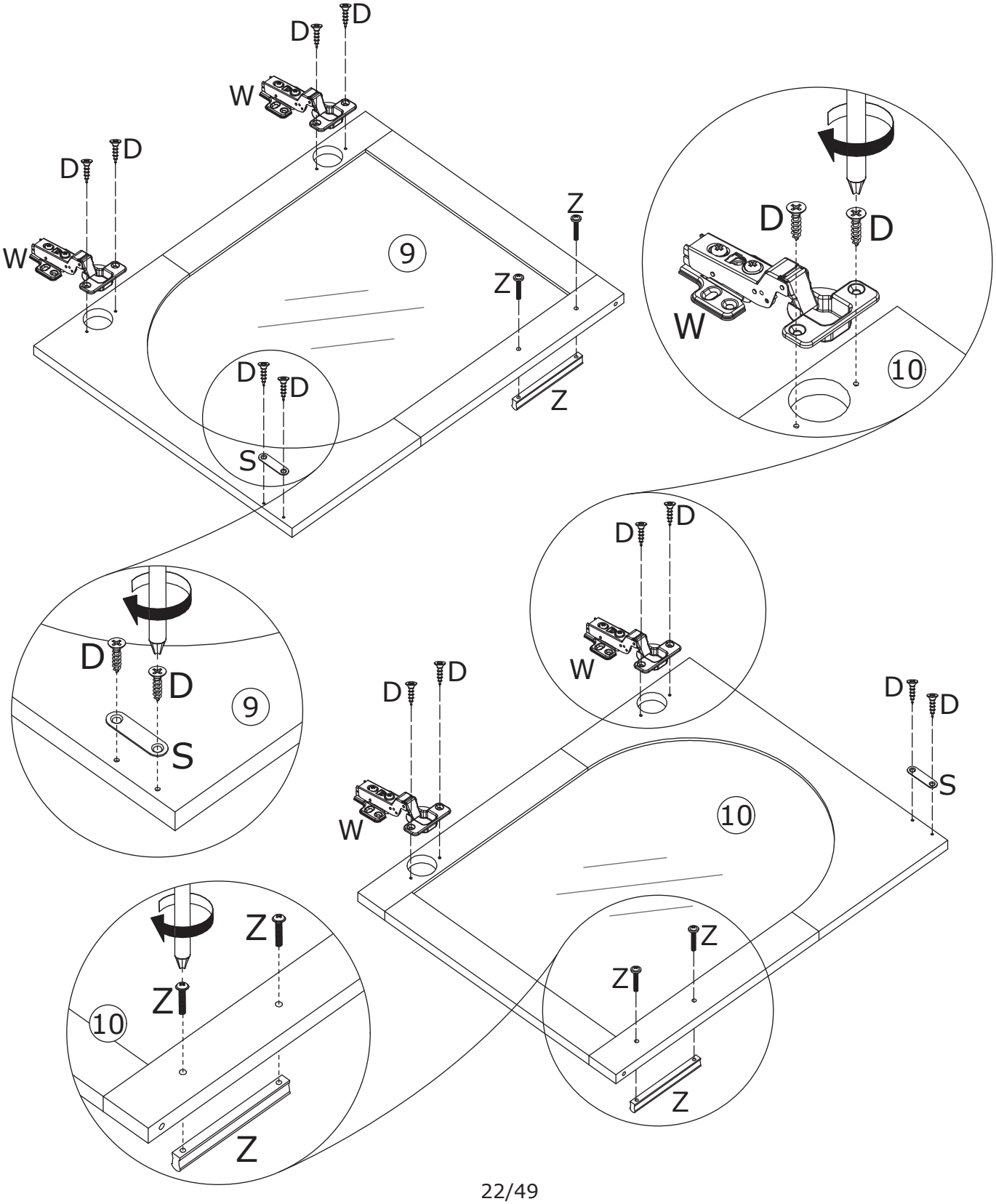

17

D x 16



M3.5 x 14 mm

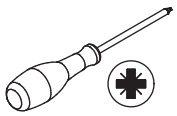

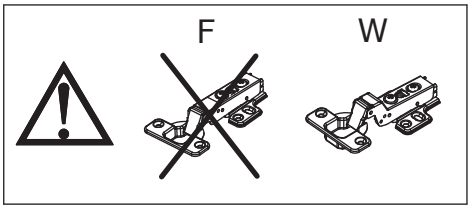

Connect board 9 and 10 to board 3 and 5 via securing hinges using screw (D).

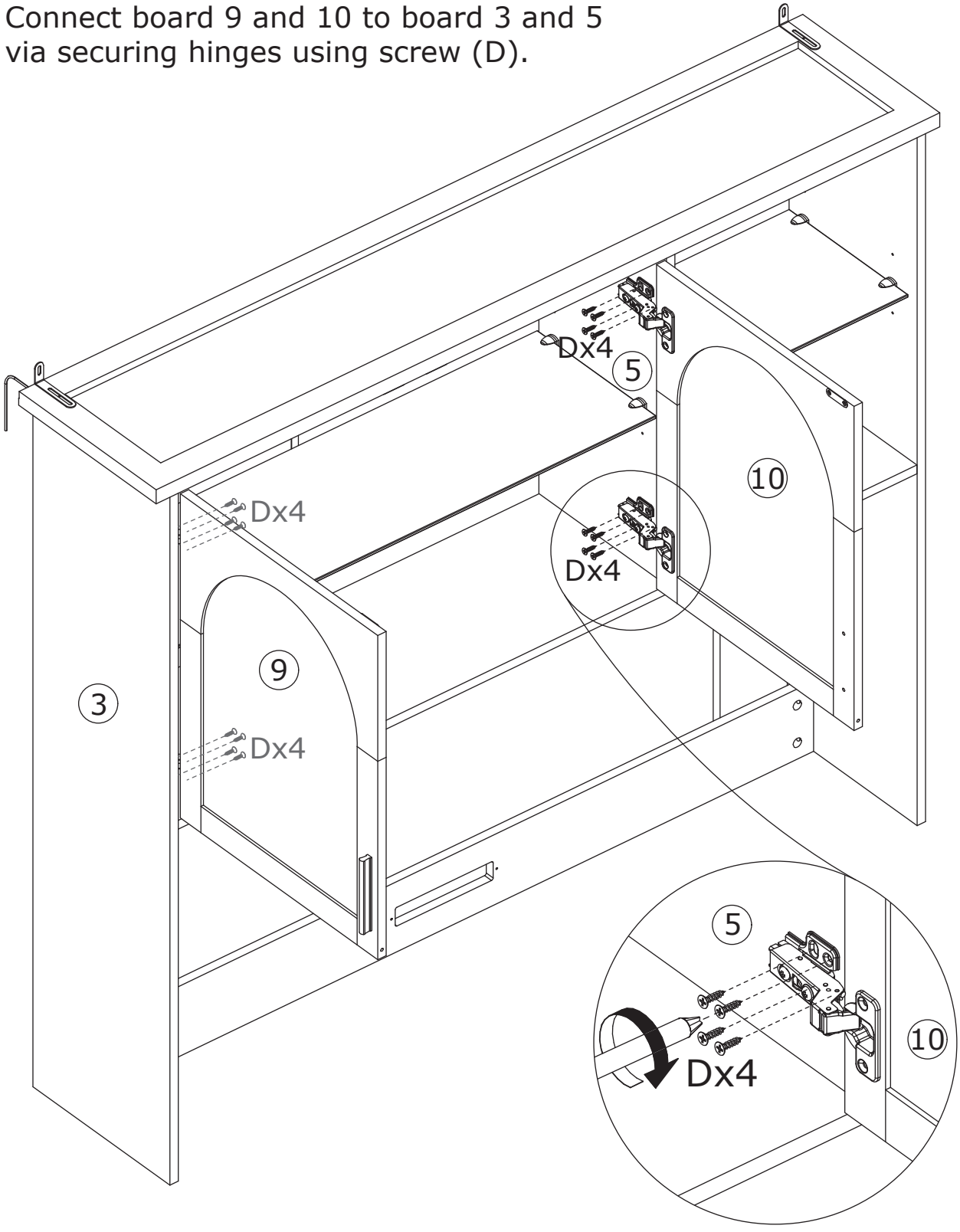

18

A x 6	L x 6	N x 2	
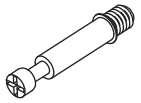			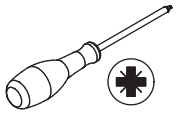
M6 x 35 mm	M3.5 x 12 mm	290 mm	

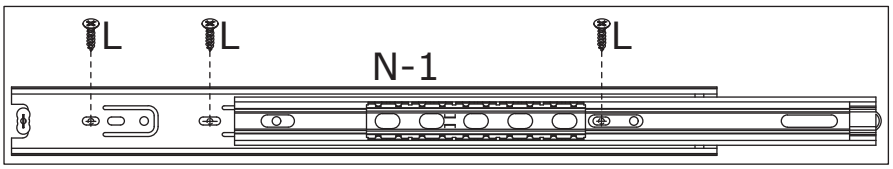

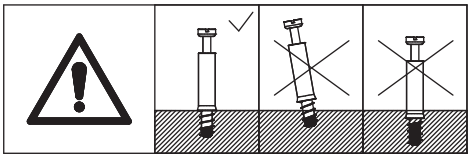

Secure slide rail (N-1) to board 13 and 15 using screw (L).
Screw eccentric rod (A) onto board 13 and 15.

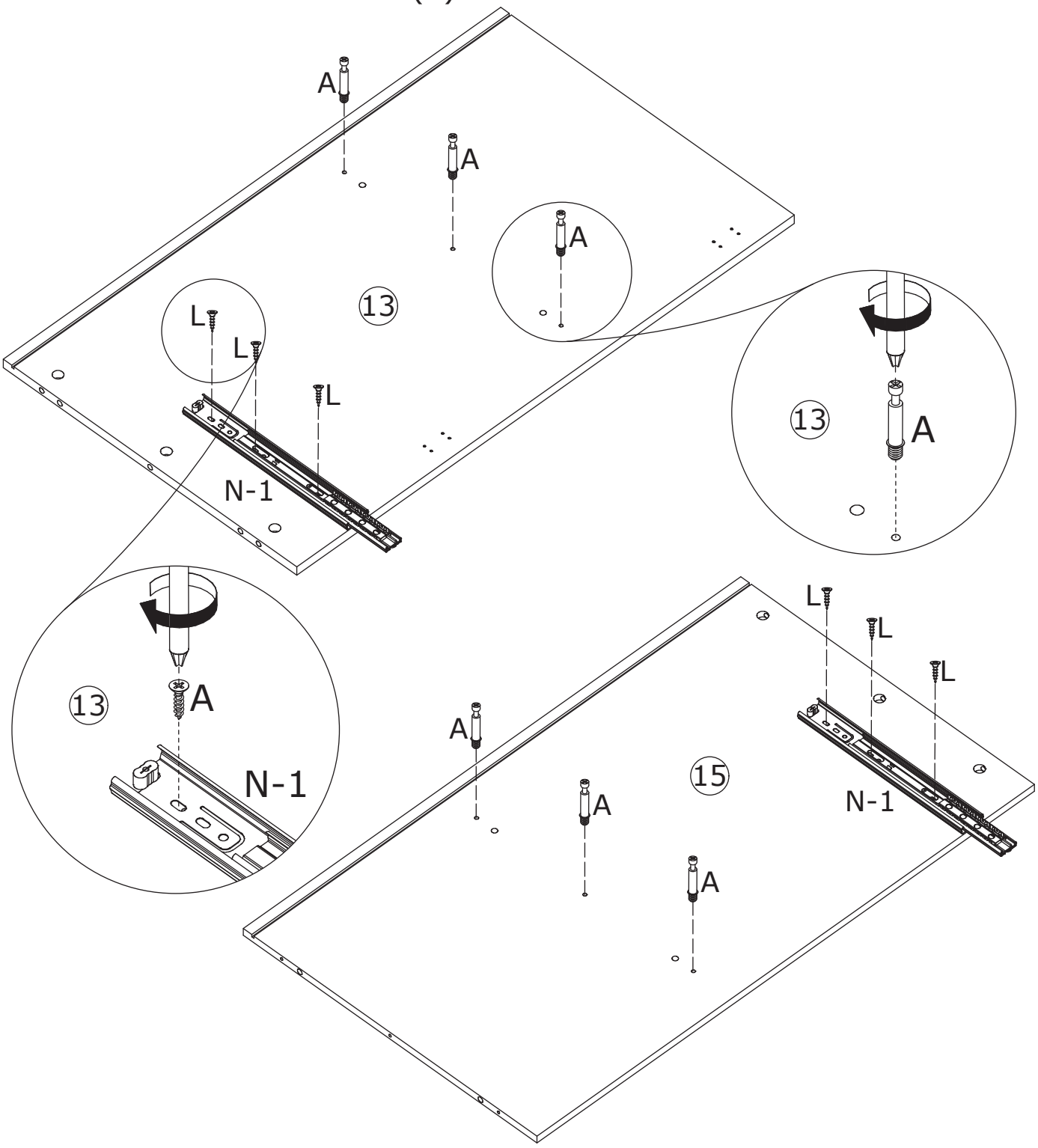

19

B x 6	C x 4	
 ∅15 mm	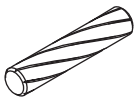 ∅8 x 30 mm	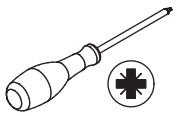

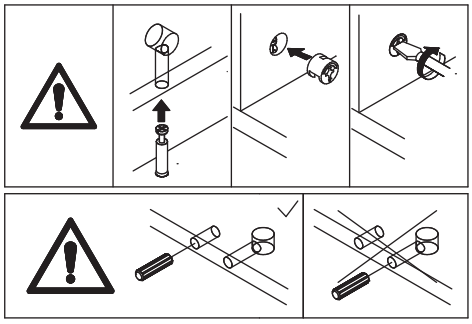

Connect board 17 to board 13 and 15 using dowel (C), then tighten by turning eccentric cam (B) clockwise.

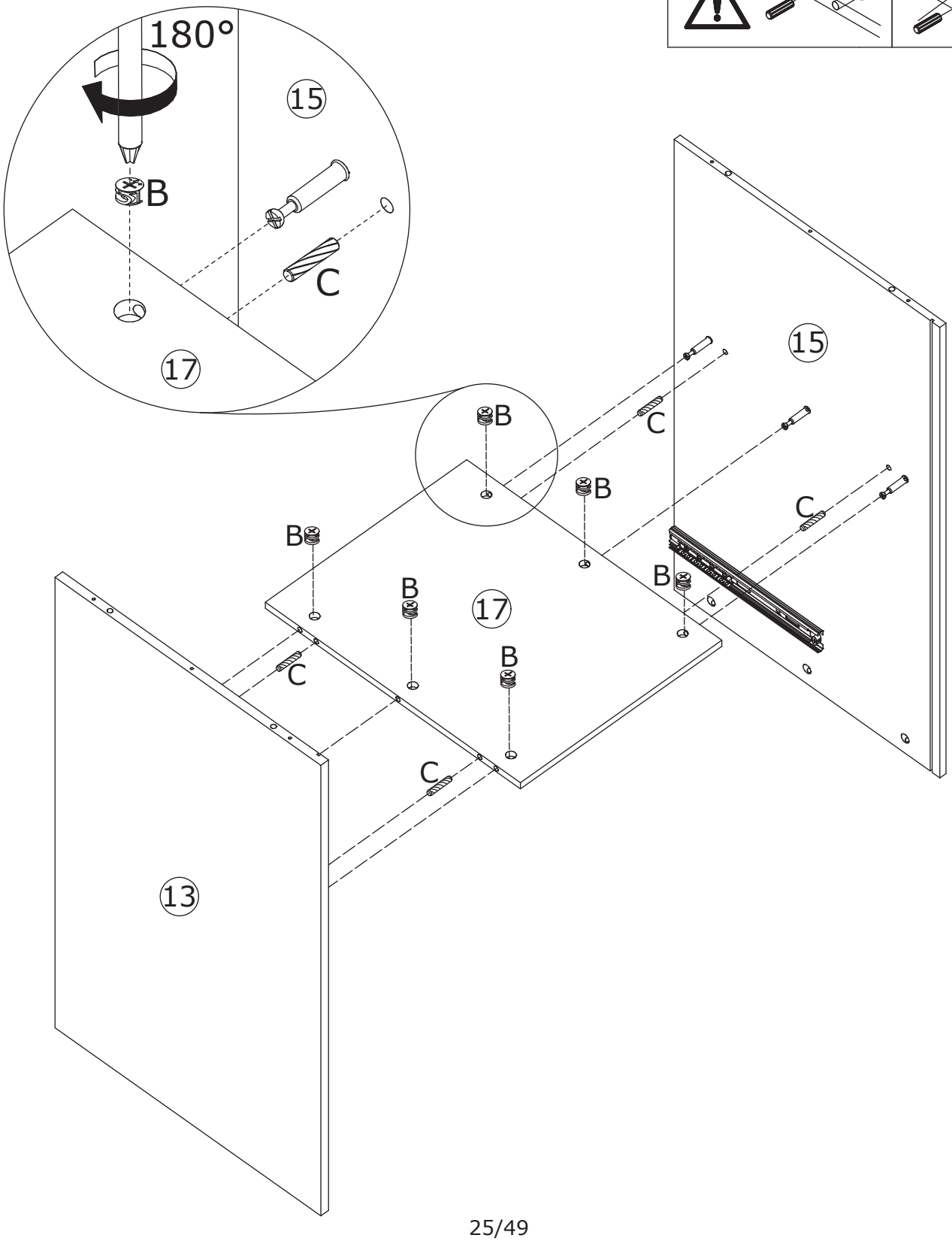

20

A x 6	L x 6	N x 2	
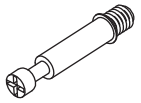			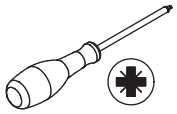
M6 x 35 mm	M3.5 x 12 mm	N-1 290 mm	

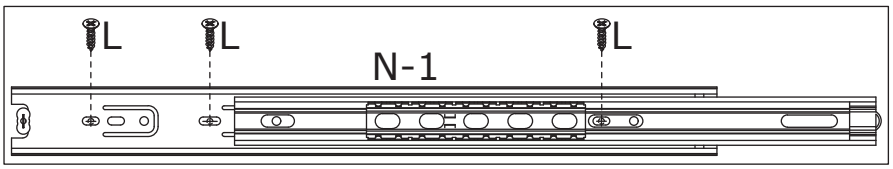

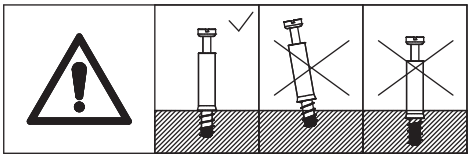

Secure slide rail (N-1) to board 16 and 14 using screw (L).
Screw eccentric rod (A) onto board 14 and 16.

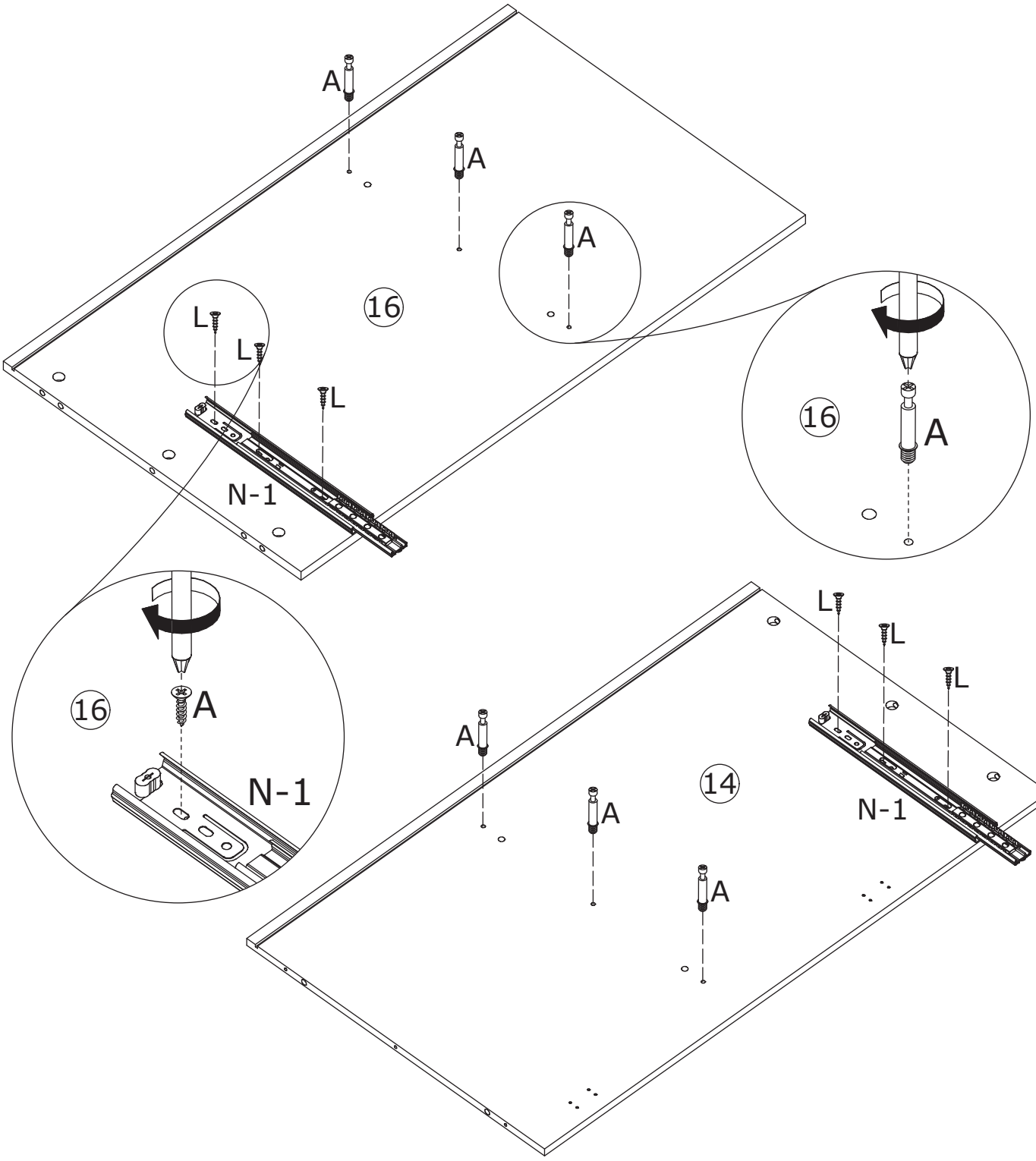

21

B x 6	C x 4	
 ∅15 mm	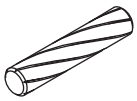 ∅8 x 30 mm	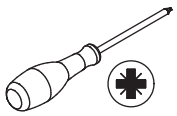

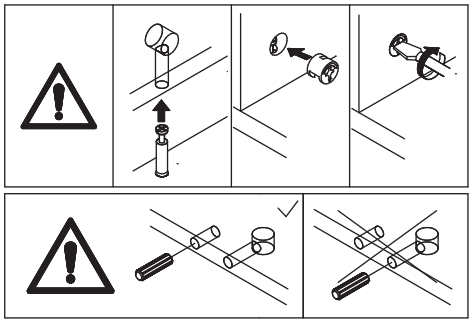

Connect board 17 to board 16 and 14 using dowel (C), then tighten by turning eccentric cam (B) clockwise.

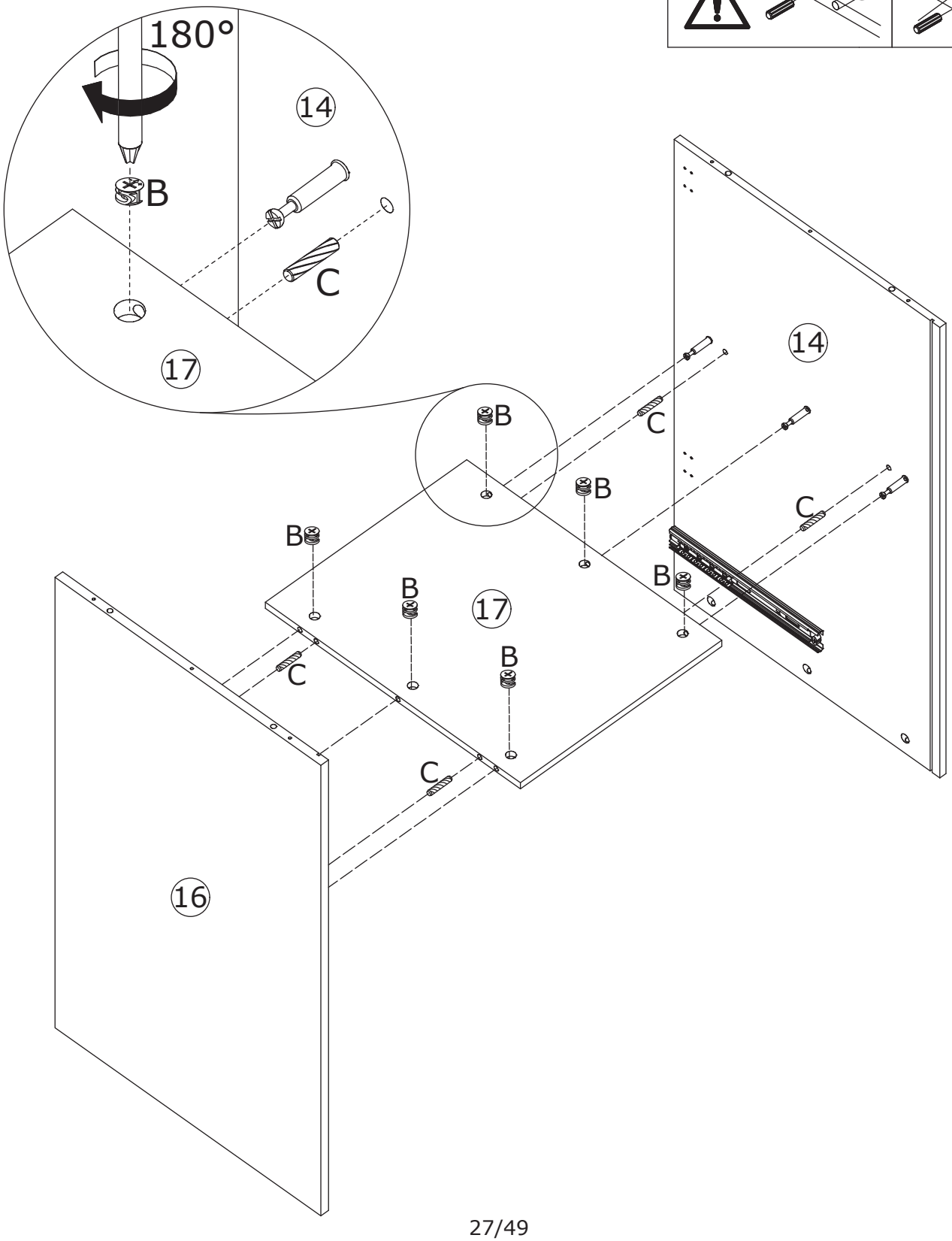

22

A x 12

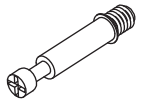

M6 x 35 mm

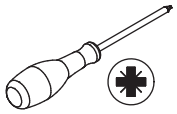

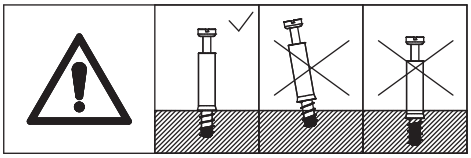

Screw eccentric rod (A) onto board 11.

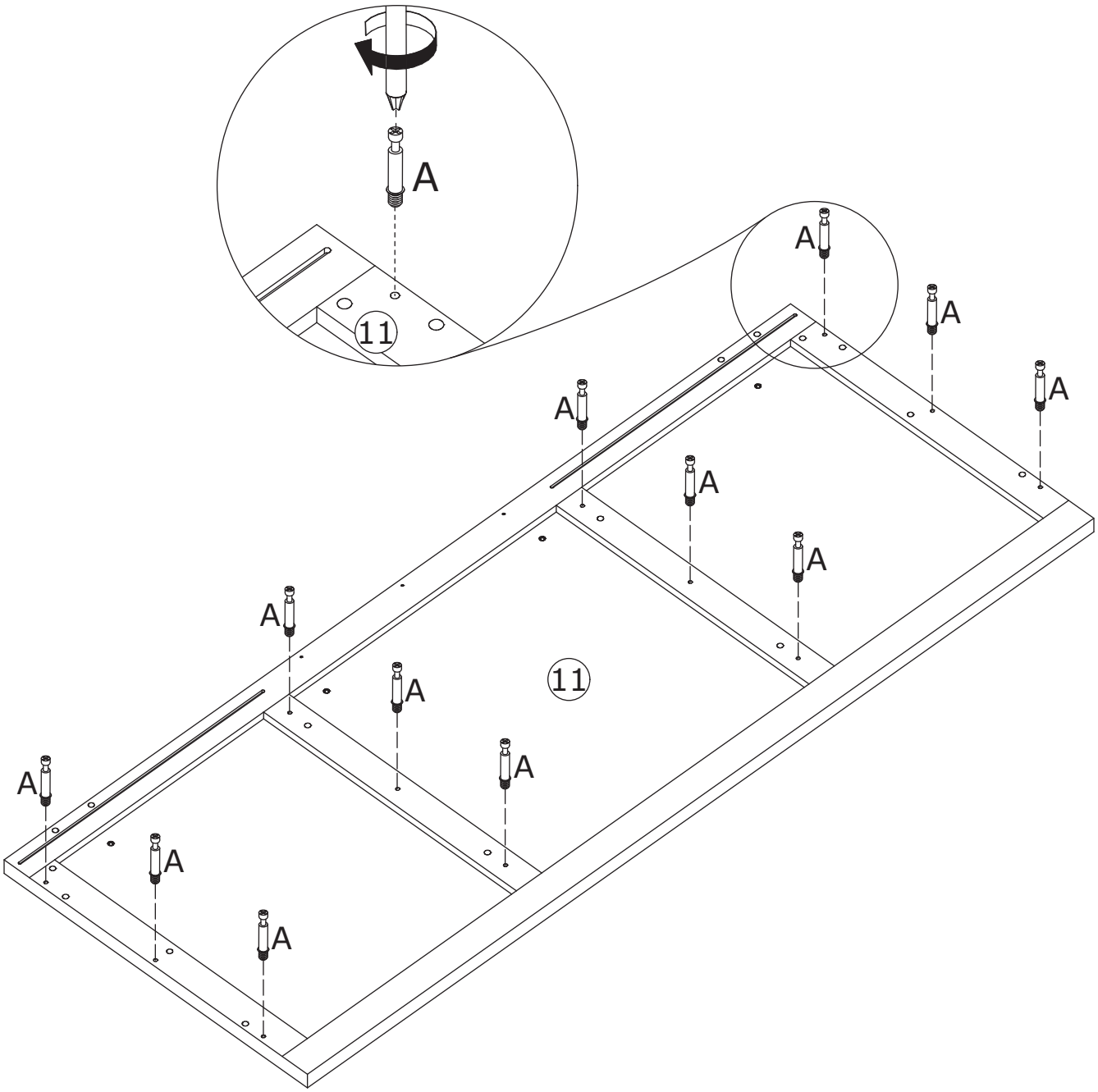

23

B x 12	C x 8	
	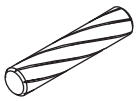	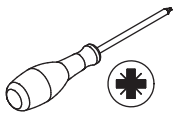
∅15 mm	∅8 x 30 mm	

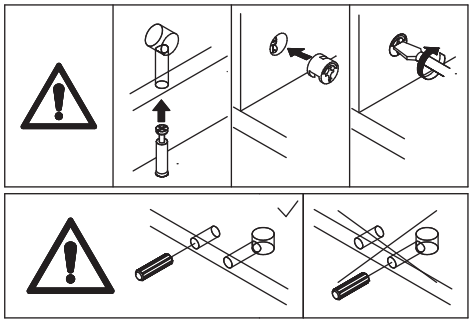

Connect board 11 to board 13, 15, 16, and 14 using dowel (C), then tighten by turning eccentric cam (B) clockwise.

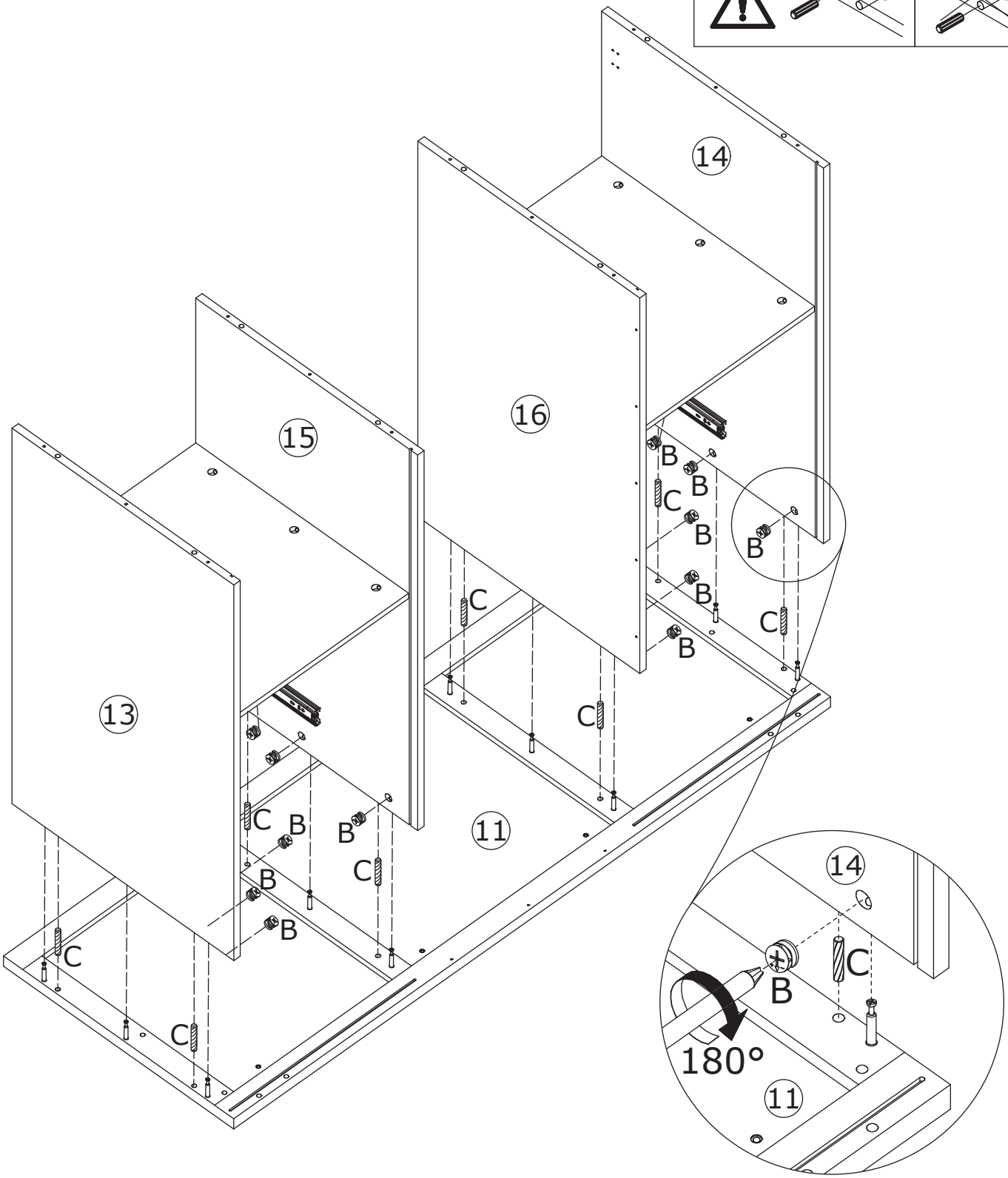

24

Insert boards 29 along the available slots.

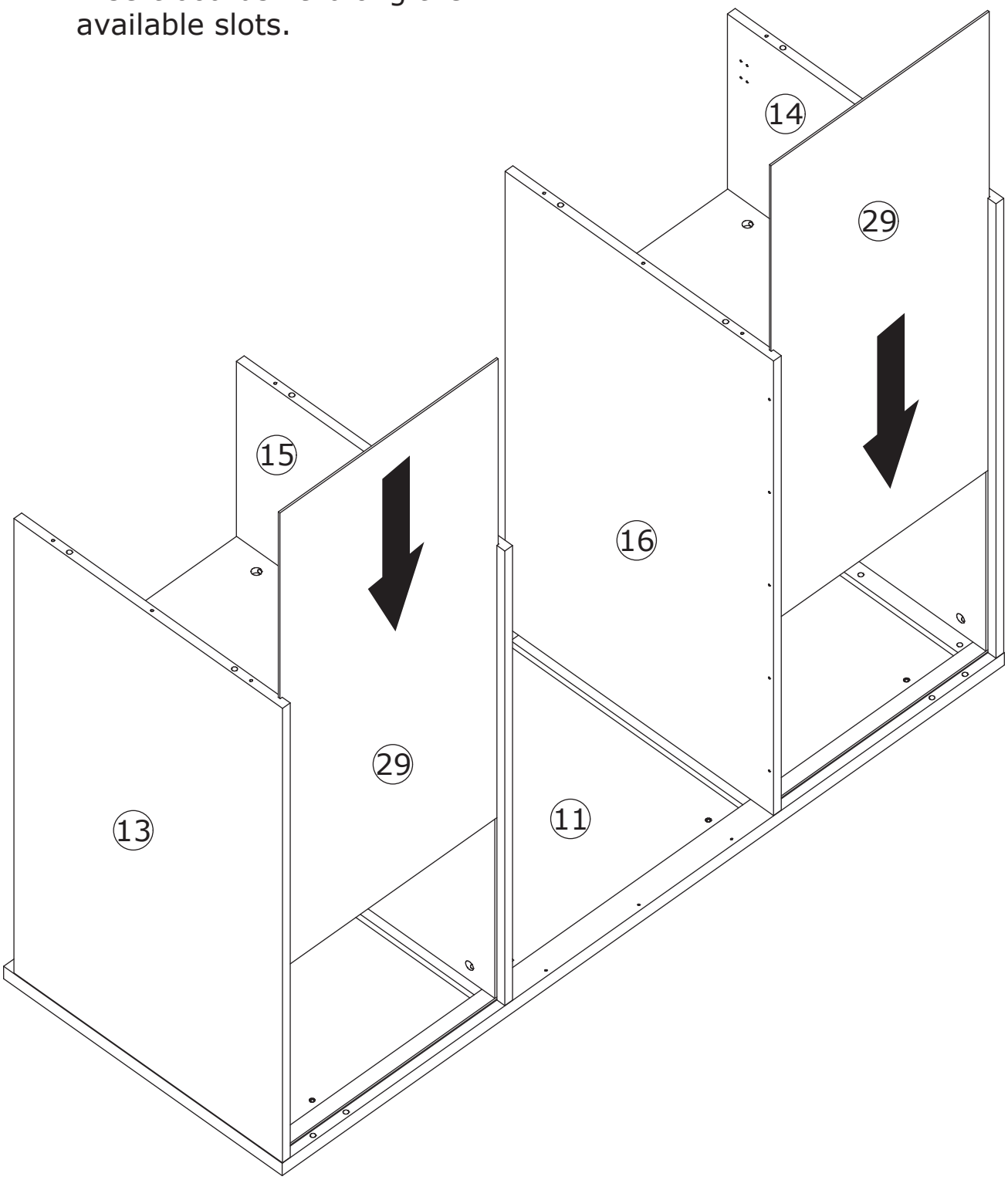

25

C x 8	J x 12	
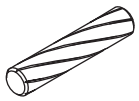	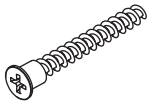	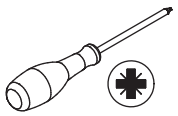
∅8 x 30 mm	M5 x 38 mm	

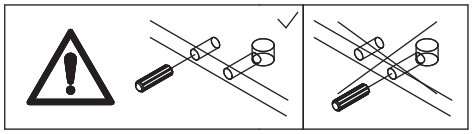

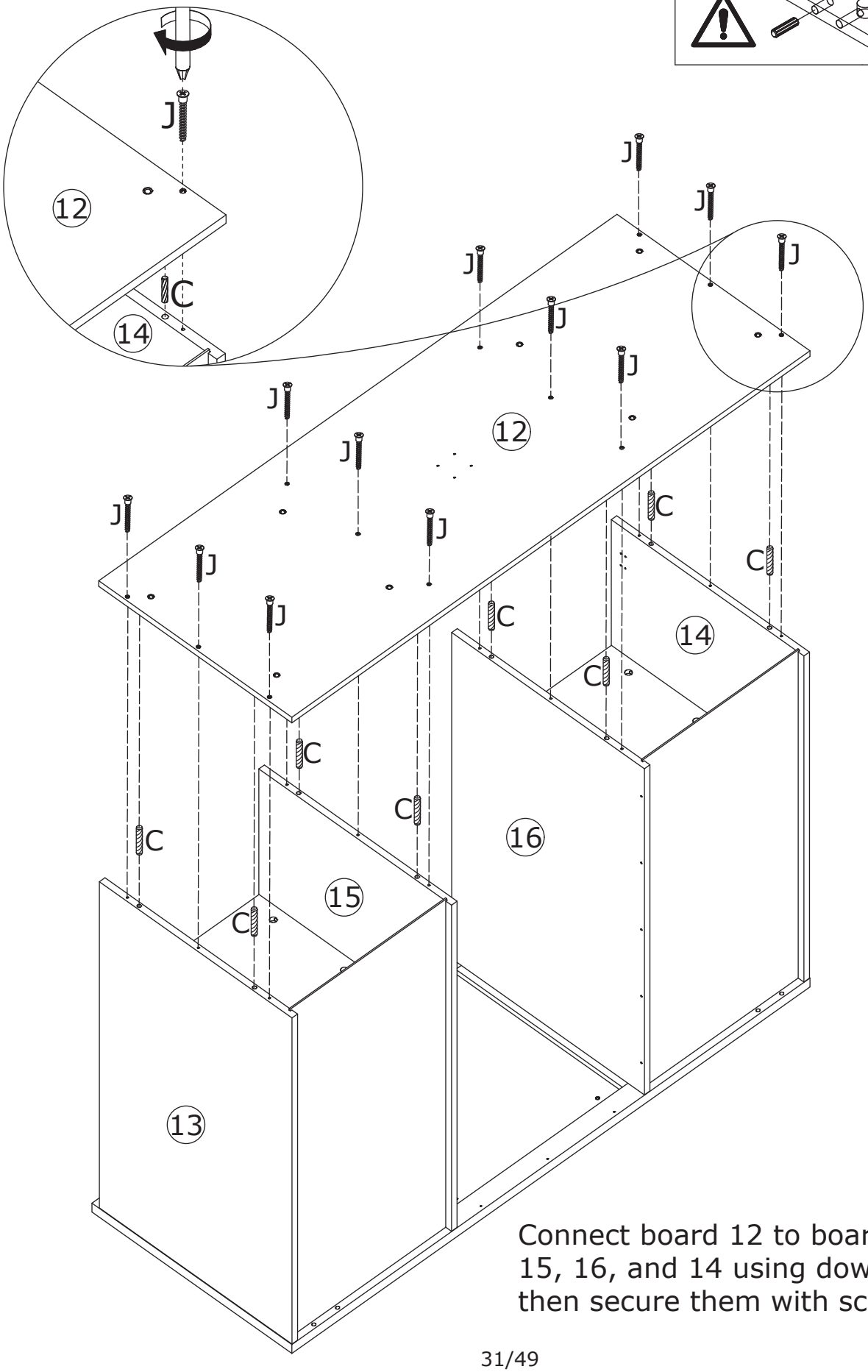

Connect board 12 to boards 13, 15, 16, and 14 using dowel (C), then secure them with screw (J).

26

O x 4	M x 1	
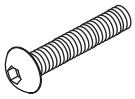 M6 x 40 mm	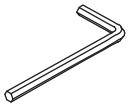 4#	

Secure iron pipe 31 and 32 together using screw (O).

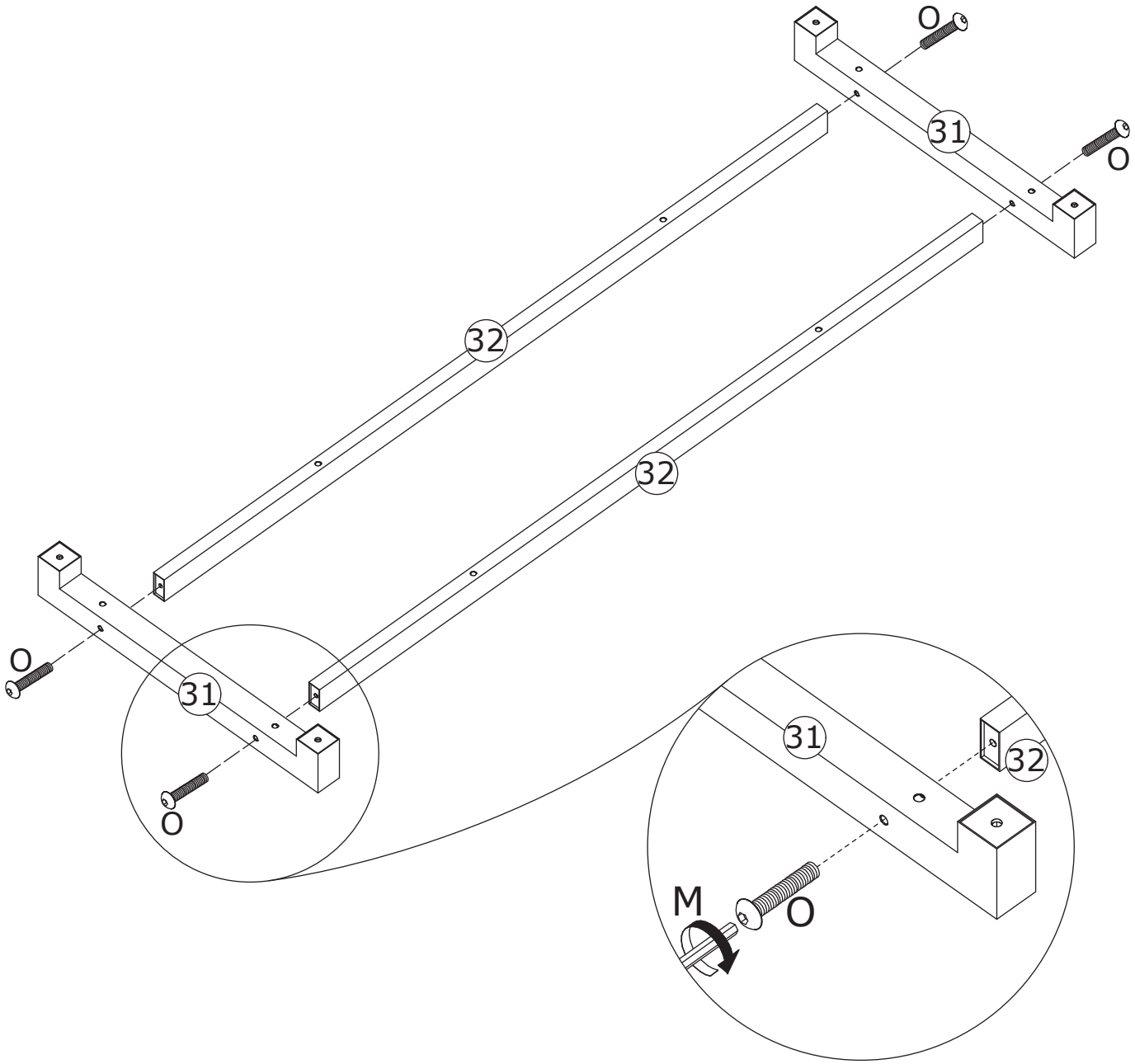

27

D x 4	M x 1	P x 8	
	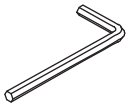	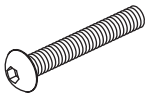	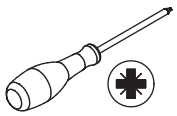
M3.5 x 14 mm	4#	M6 x 50 mm	

Secure iron pipes 31 and 32 to board 12 using screw (P).
Secure leg support 33 to board 12 using screw (D).

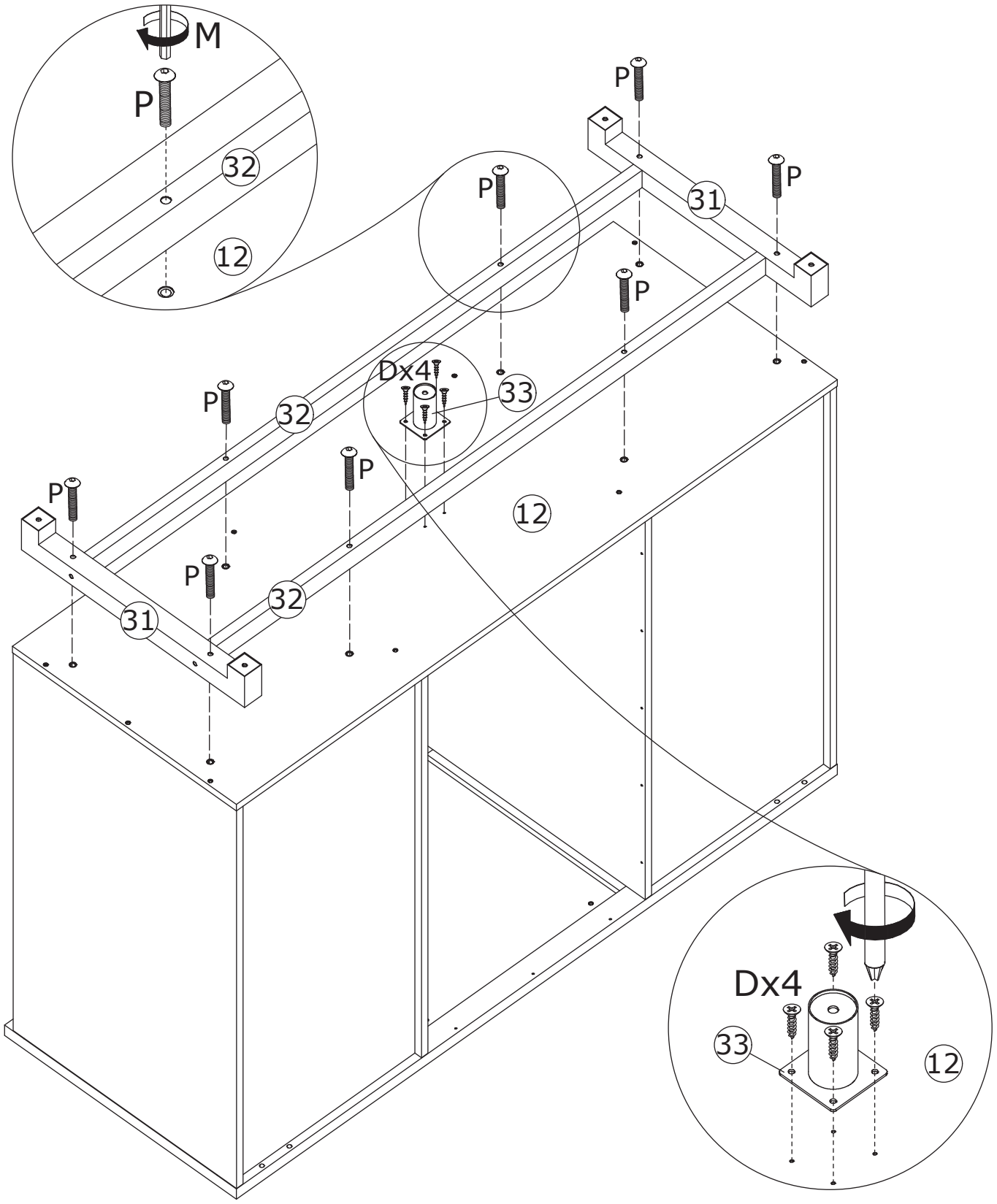

28

I x 5

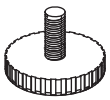

Install adjustable foot pads (I) onto iron pipe 31 and leg support 33.

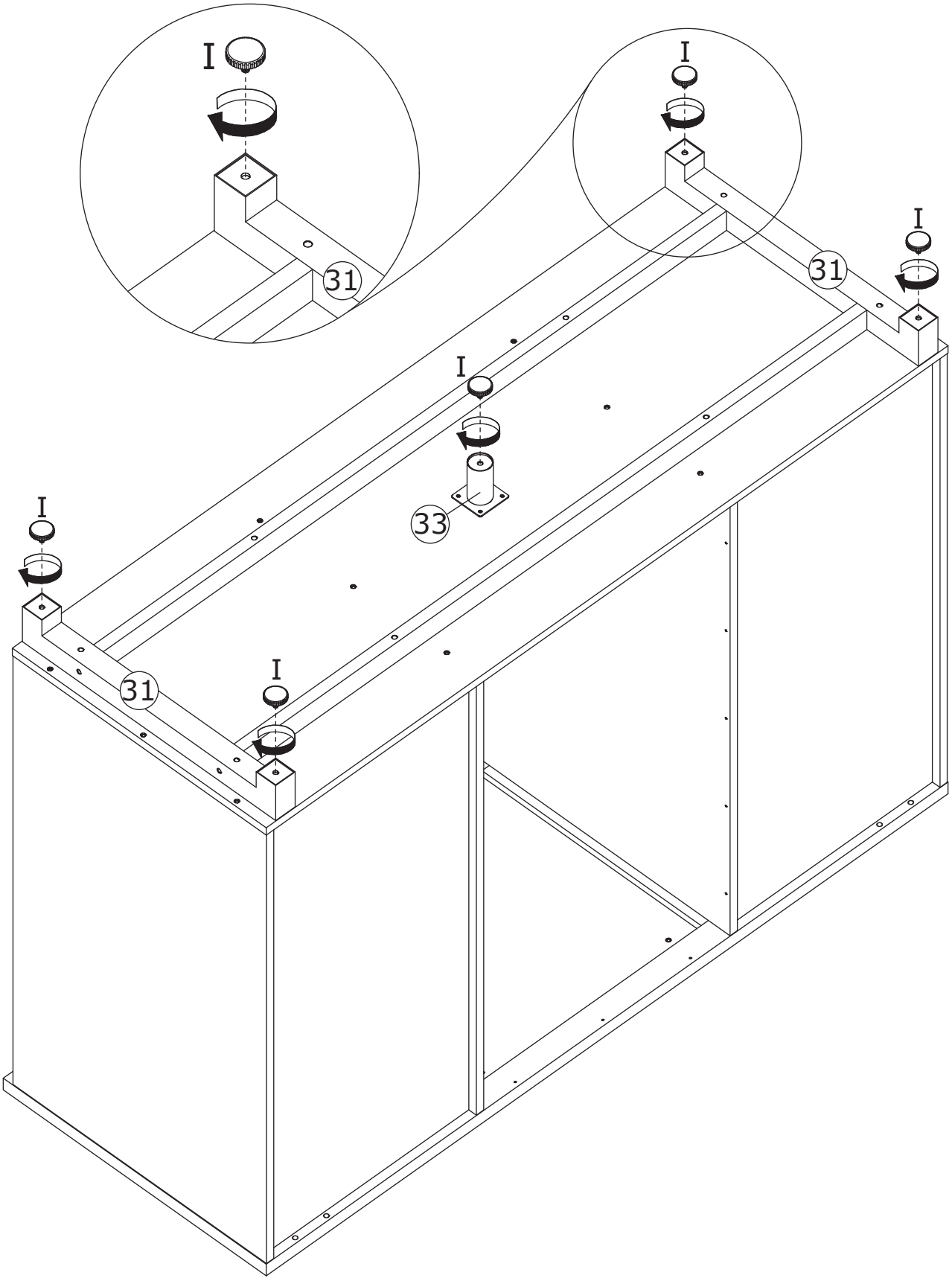

29

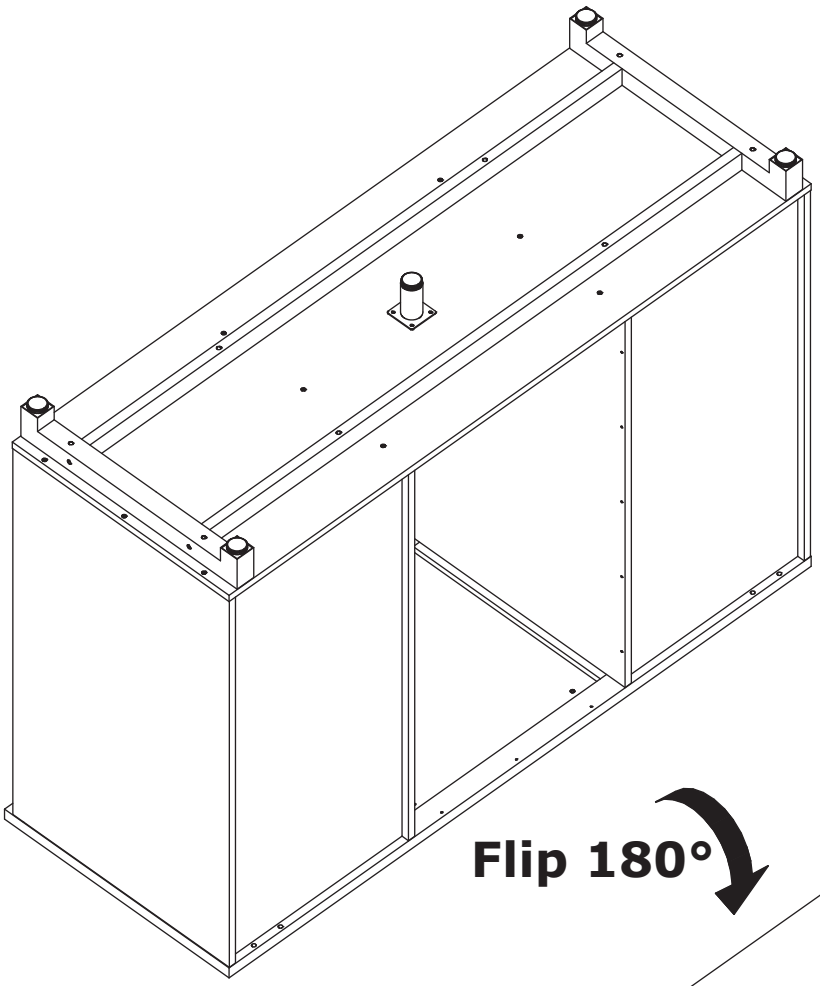

Due to the heavy weight of the cabinet, carefully flip it over with the assistance of at least two adults to avoid damage.

Flip 180°

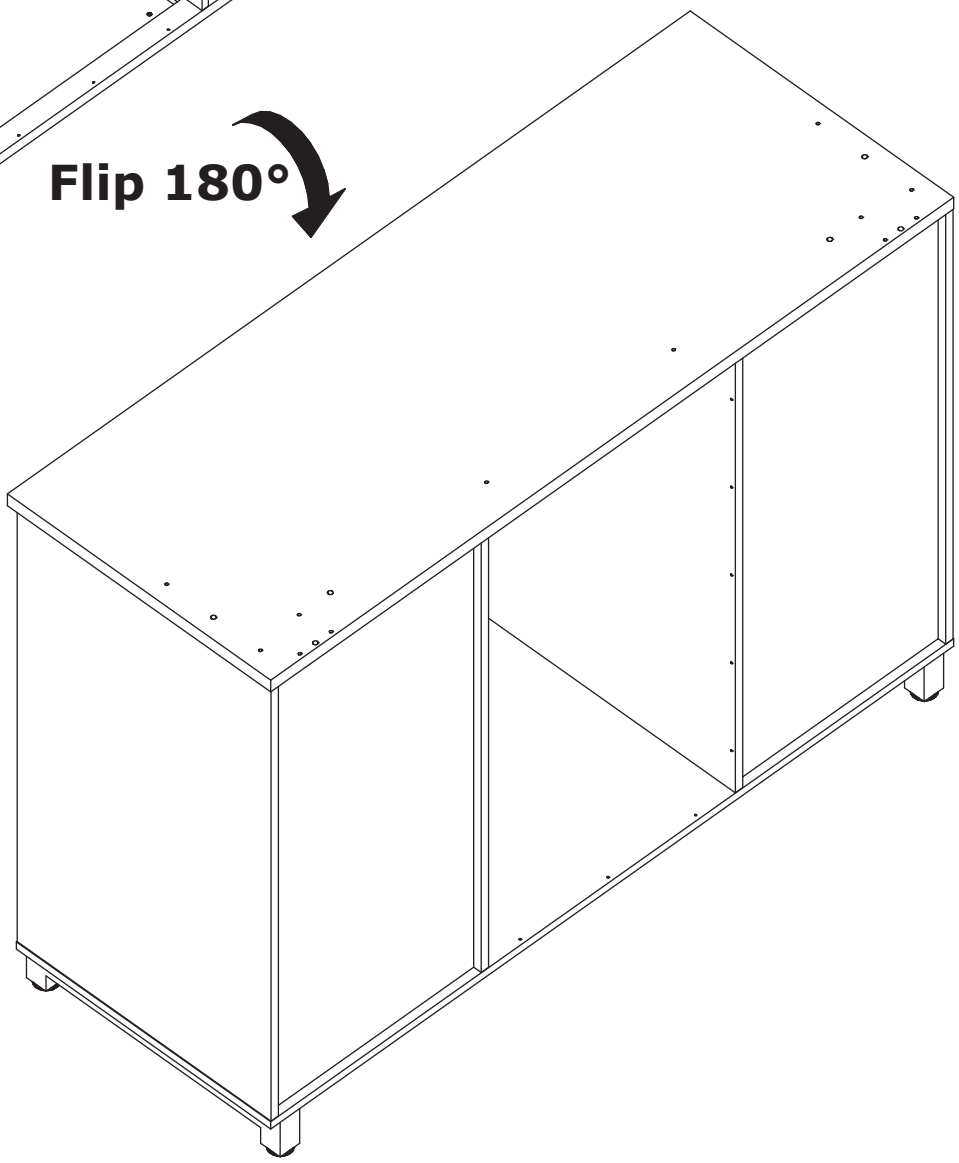

30

K x 1	L x 16	
	 M3.5 x 12 mm	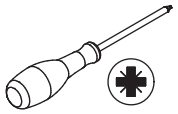

Install hole plug (K) to plate 35, then secure plate 35 to the unit using screw (L).

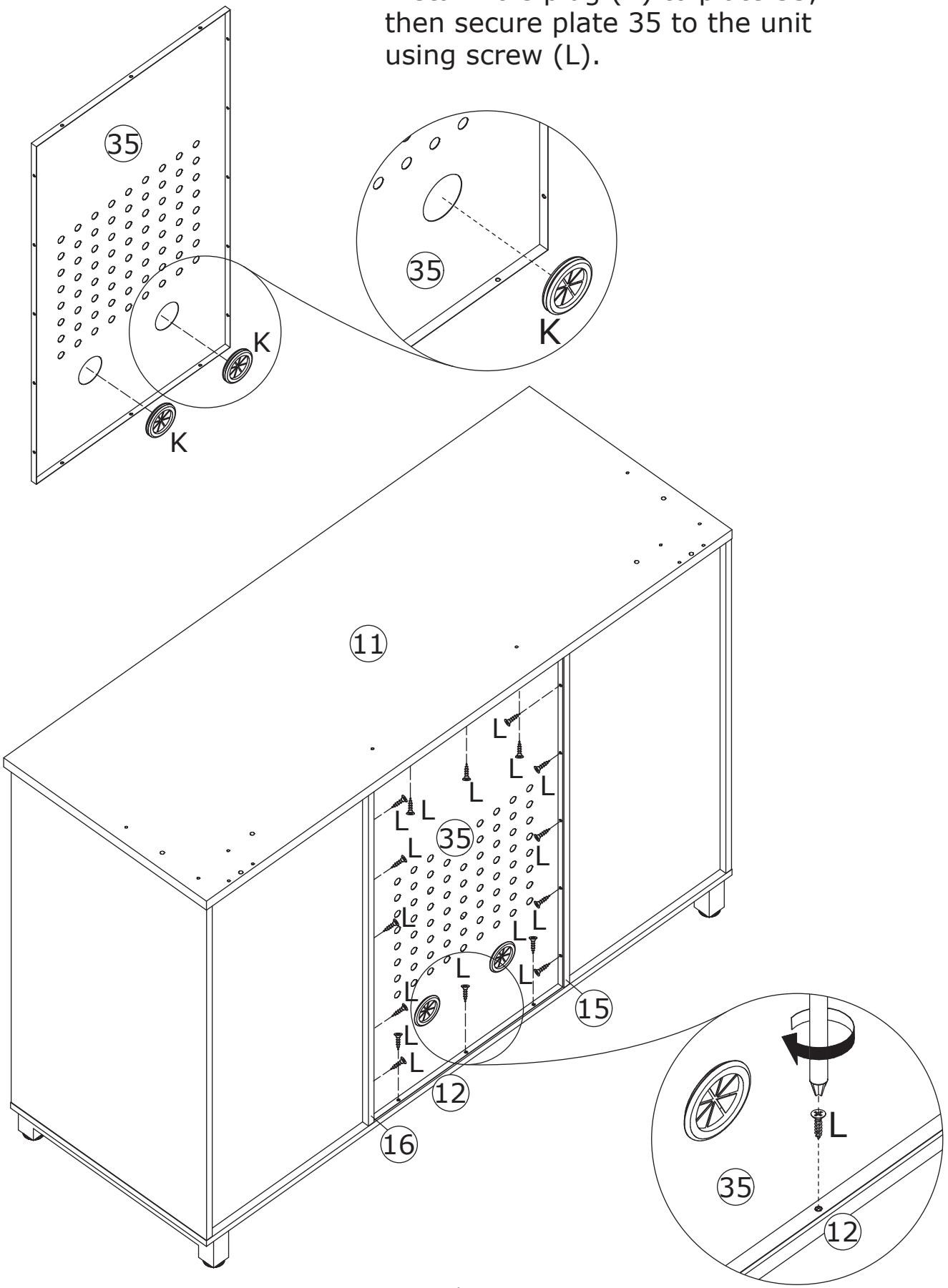

31

D x 12	U x 12	
 M3.5 x 14 mm	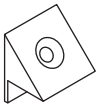	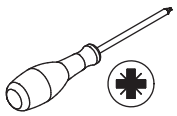

Insert clip (U) into back slots and secure them using screw (D).

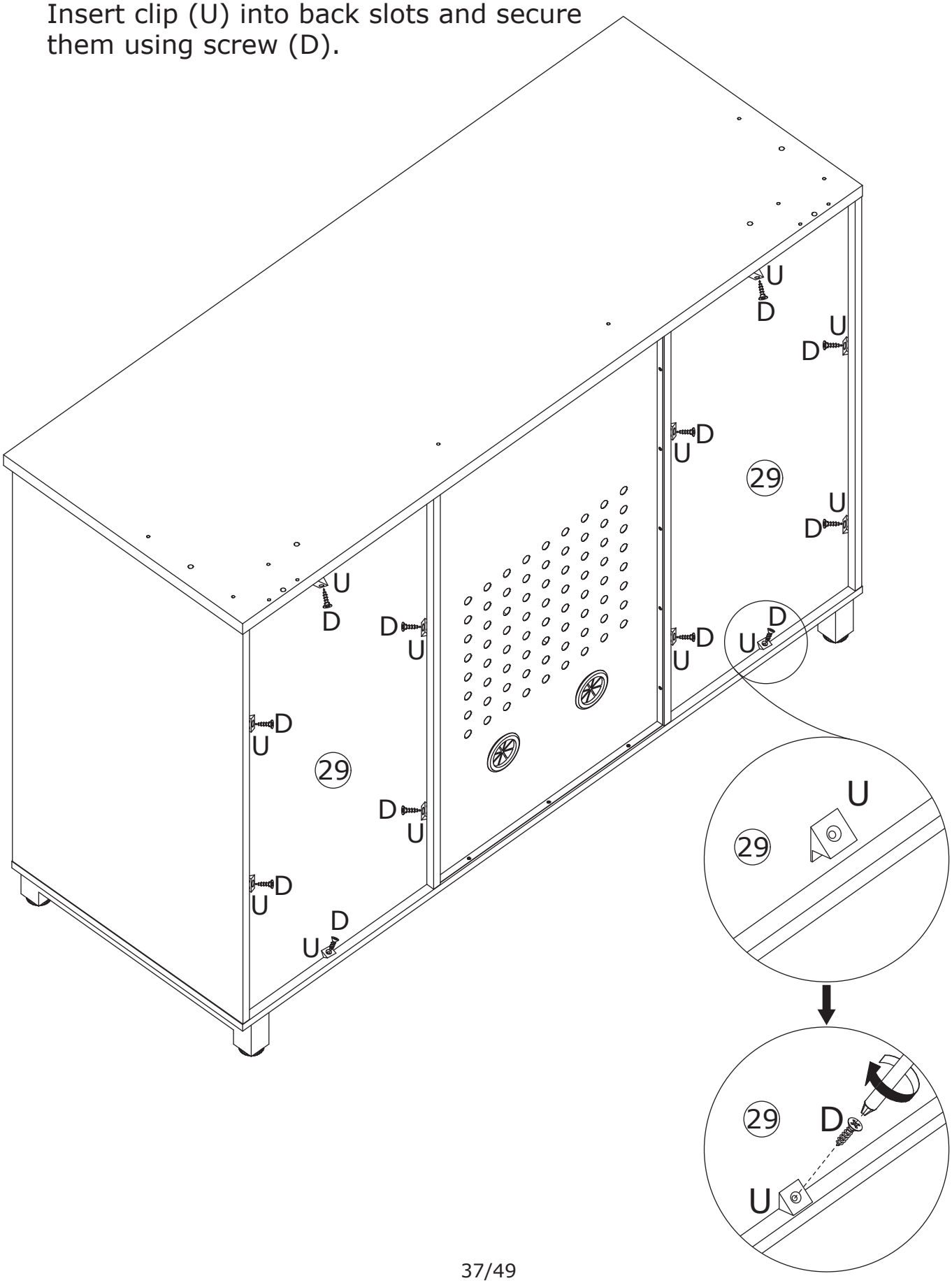

32

C x 6	J x 8	
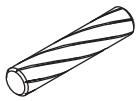	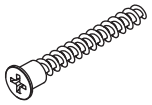	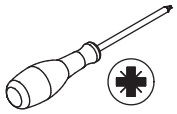
∅8 x 30 mm	M5 x 38 mm	

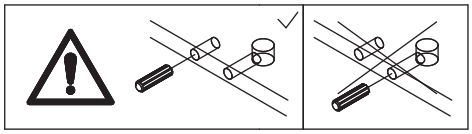

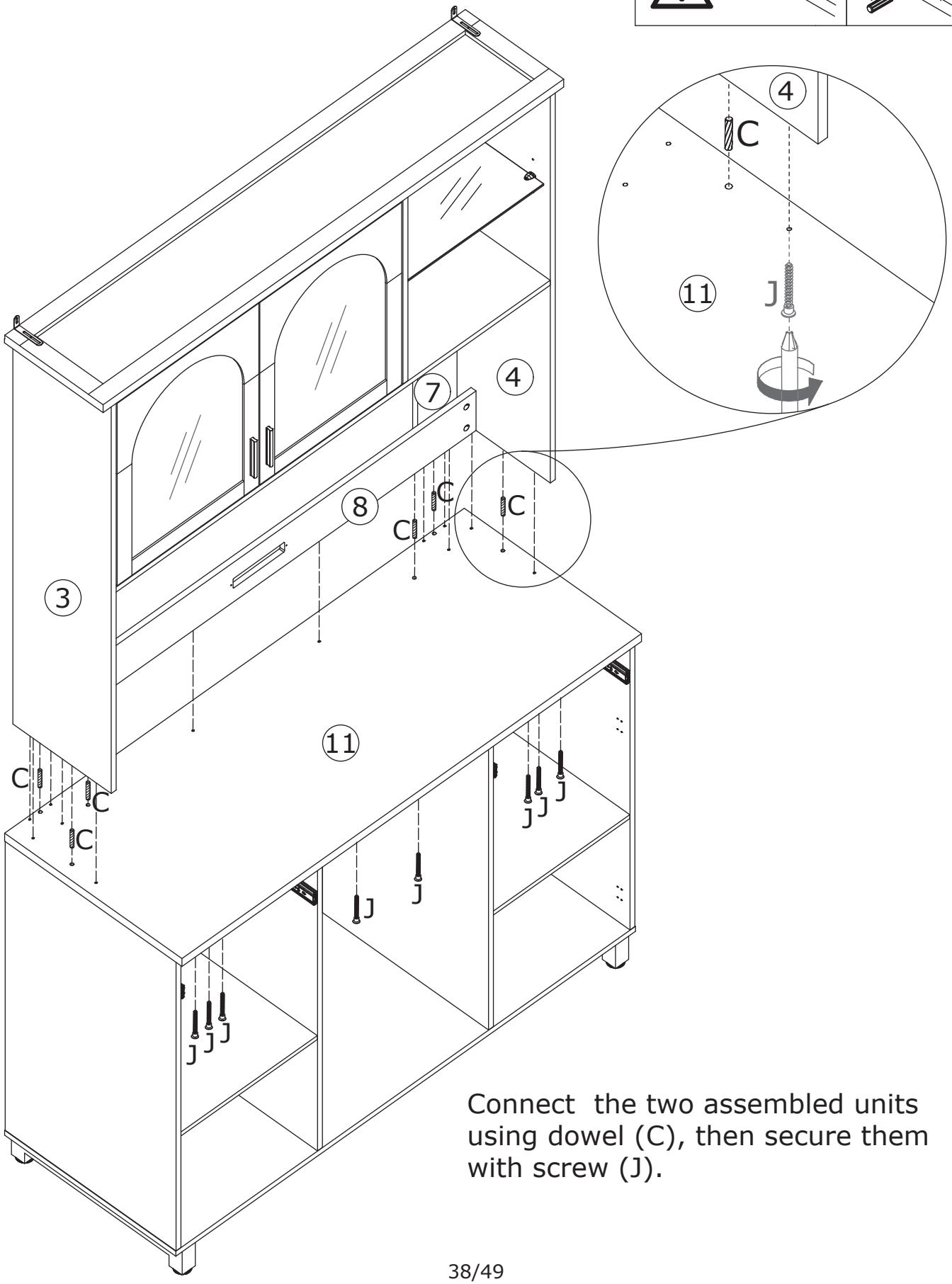

Connect the two assembled units using dowel (C), then secure them with screw (J).

33

J x 4

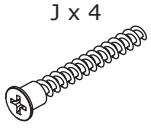

M5 x 38 mm

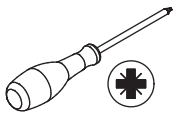

Secure board 11 to board 6 and 7 using screw (J).

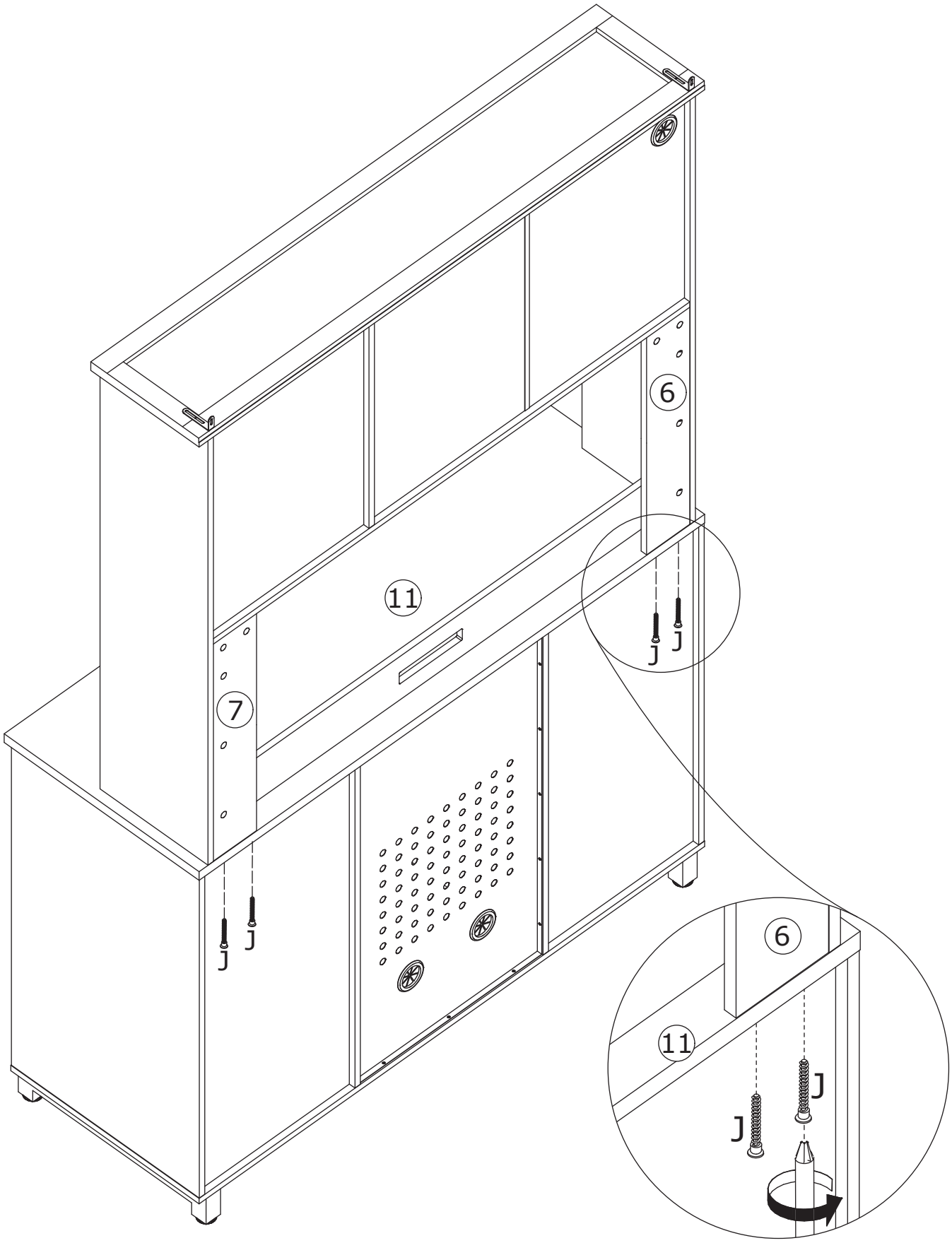

34

A x 10	E x 10	
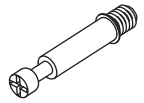	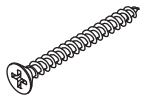	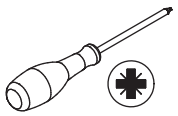
M6 x 35 mm	M4 x 35 mm	

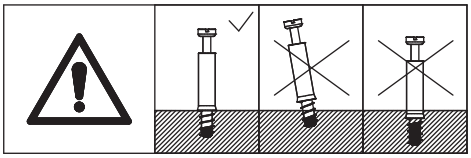

Screw eccentric rod (A) onto board 20 and 21.
Secure board 22, 25, and 23 to board 24 using screw (E).
Insert board 26 along the slots.

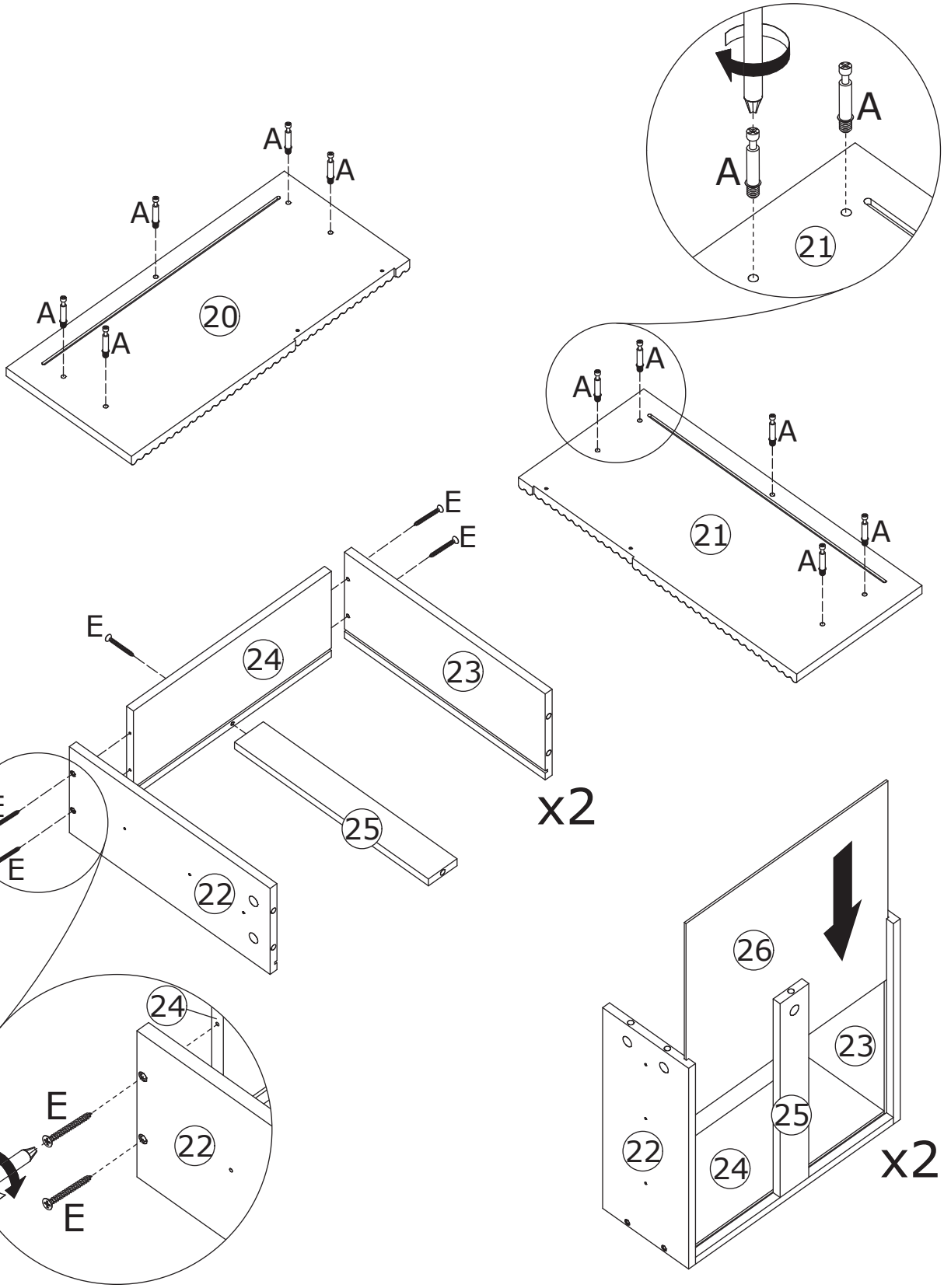

35

B x 10	G x 8	
	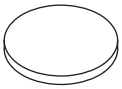	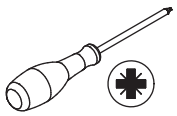
∅15 mm	∅20 mm	

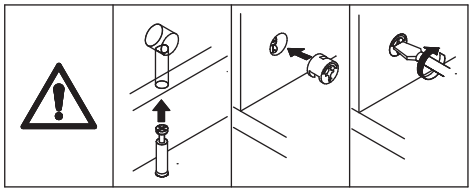

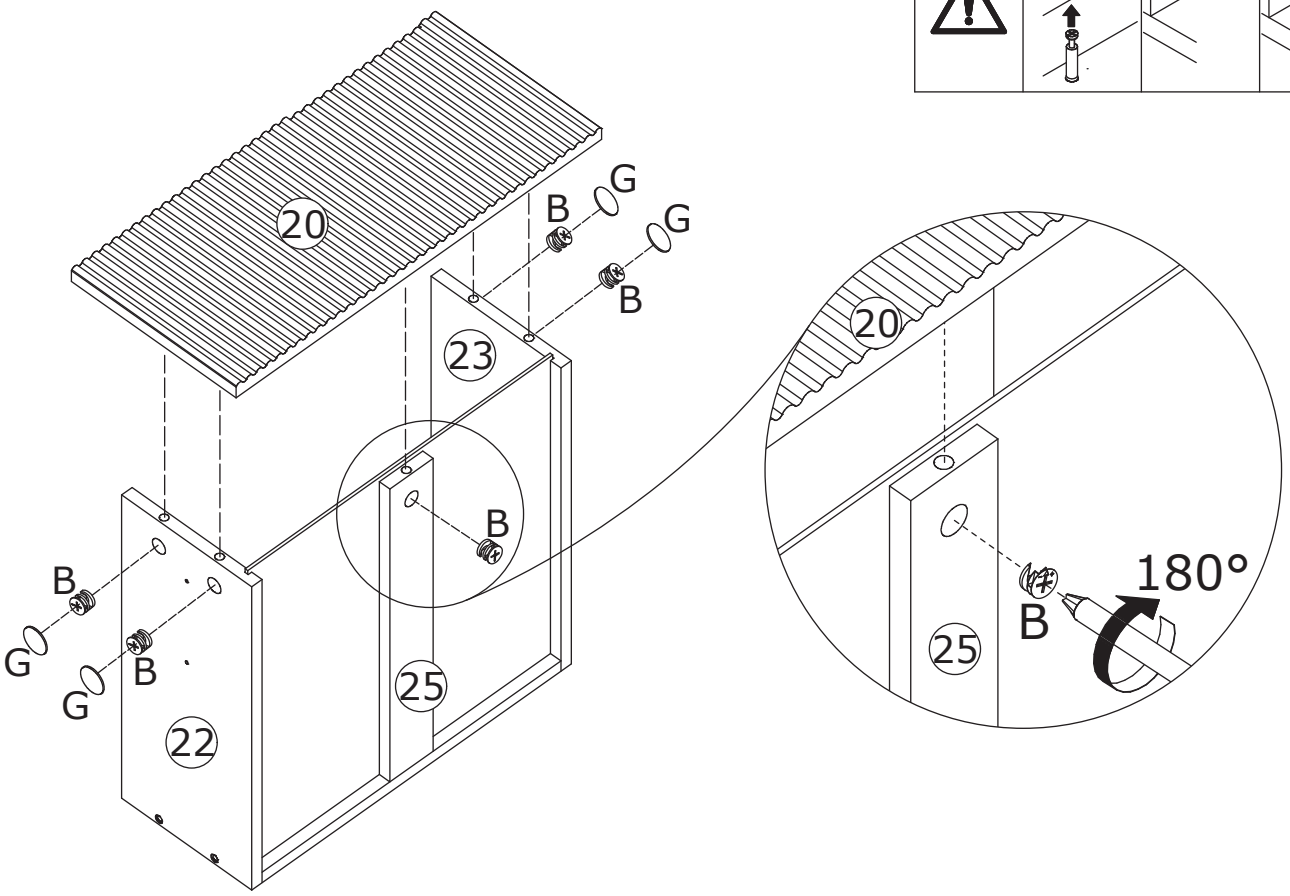

Connect boards 20 and 21 to board 22, 25, and 23 respectively, then tighten by turning eccentric cam (B) clockwise.

If necessary, cover exposed screw holes with sticker (G).

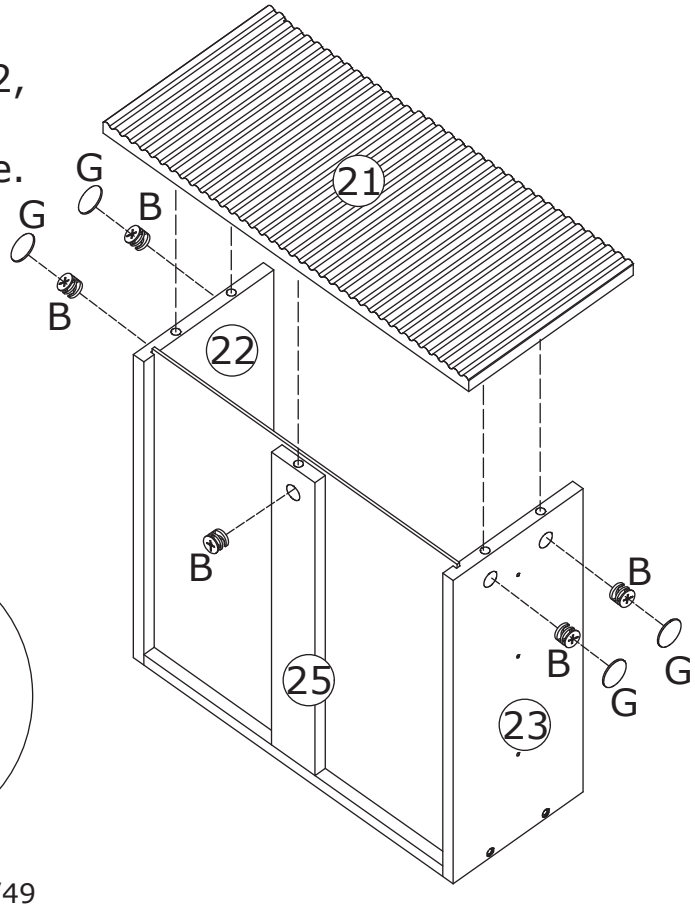

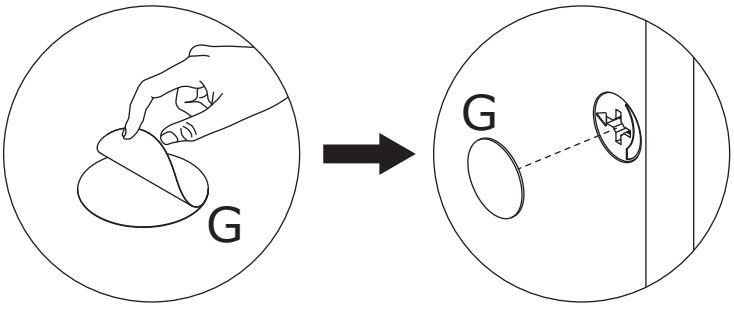

36

L x 12	N x 4	
	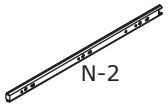	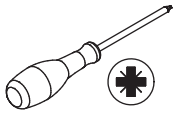
M3.5 x 12 mm	290 mm	

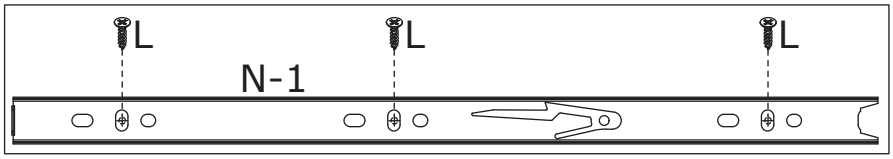

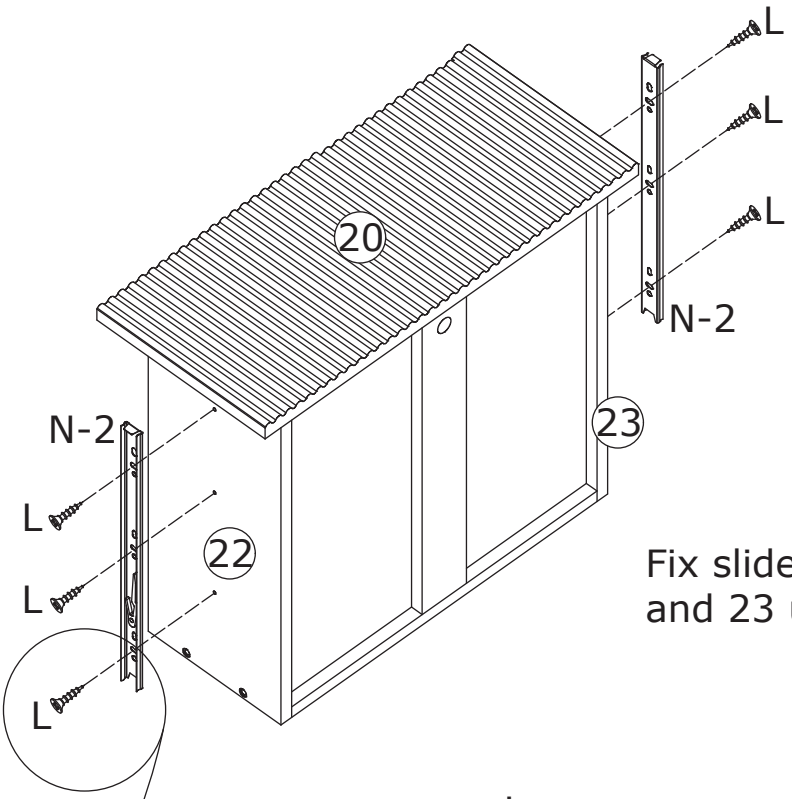

Fix slide rail (N-2) to board 22 and 23 using screw (L).

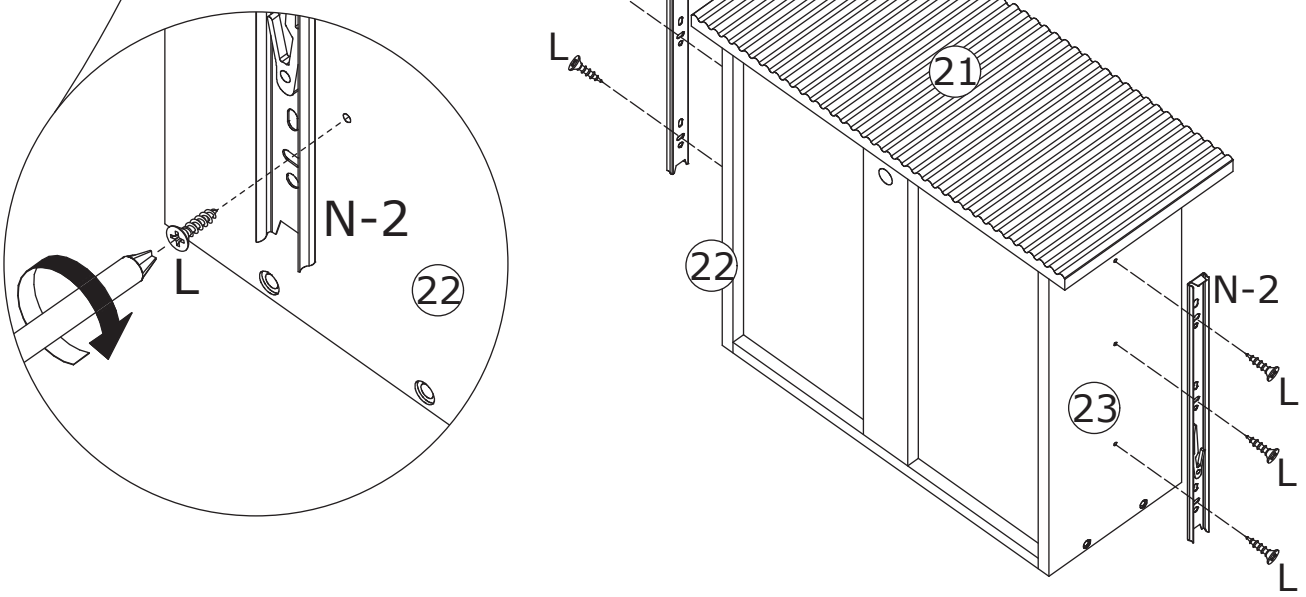

37

H x 2	L x 4	
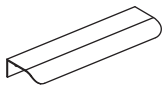	 M3.5 x 12 mm	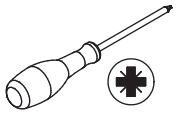

Secure handle (H) to board 20 and 21 using screw (L).

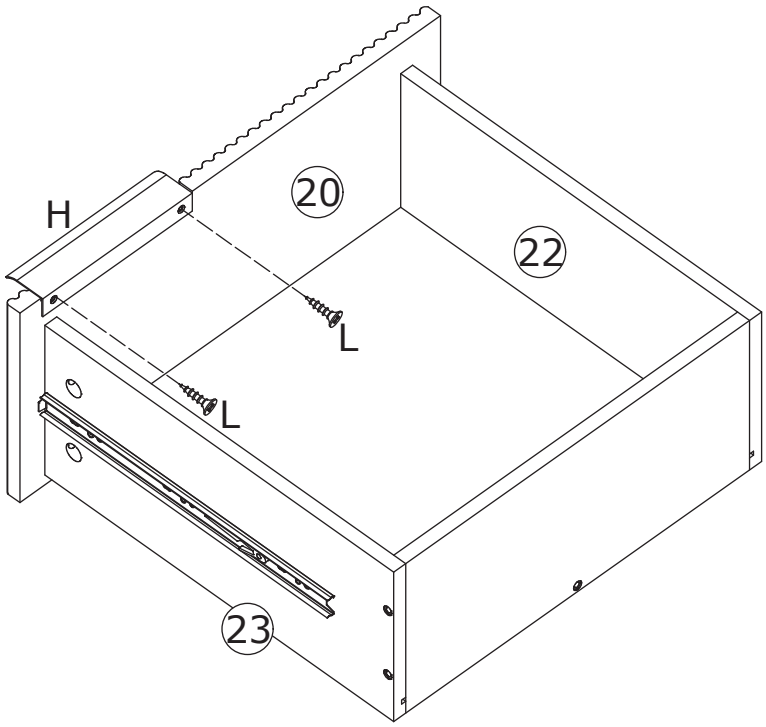

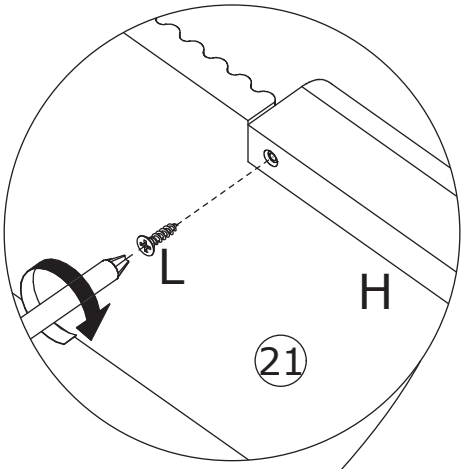

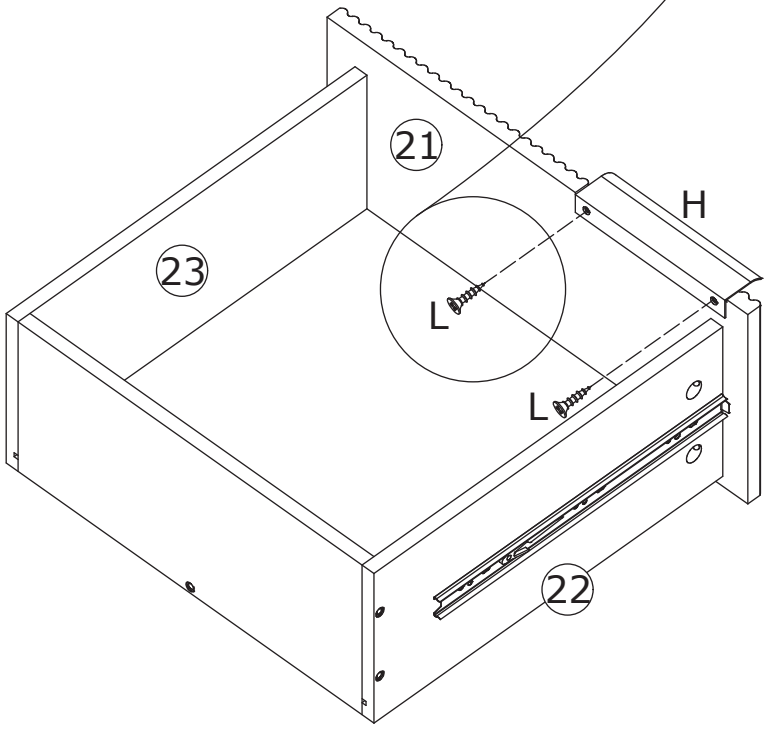

38

First pull out (N-1), then align it with (N-2), and then slowly push the drawer in.

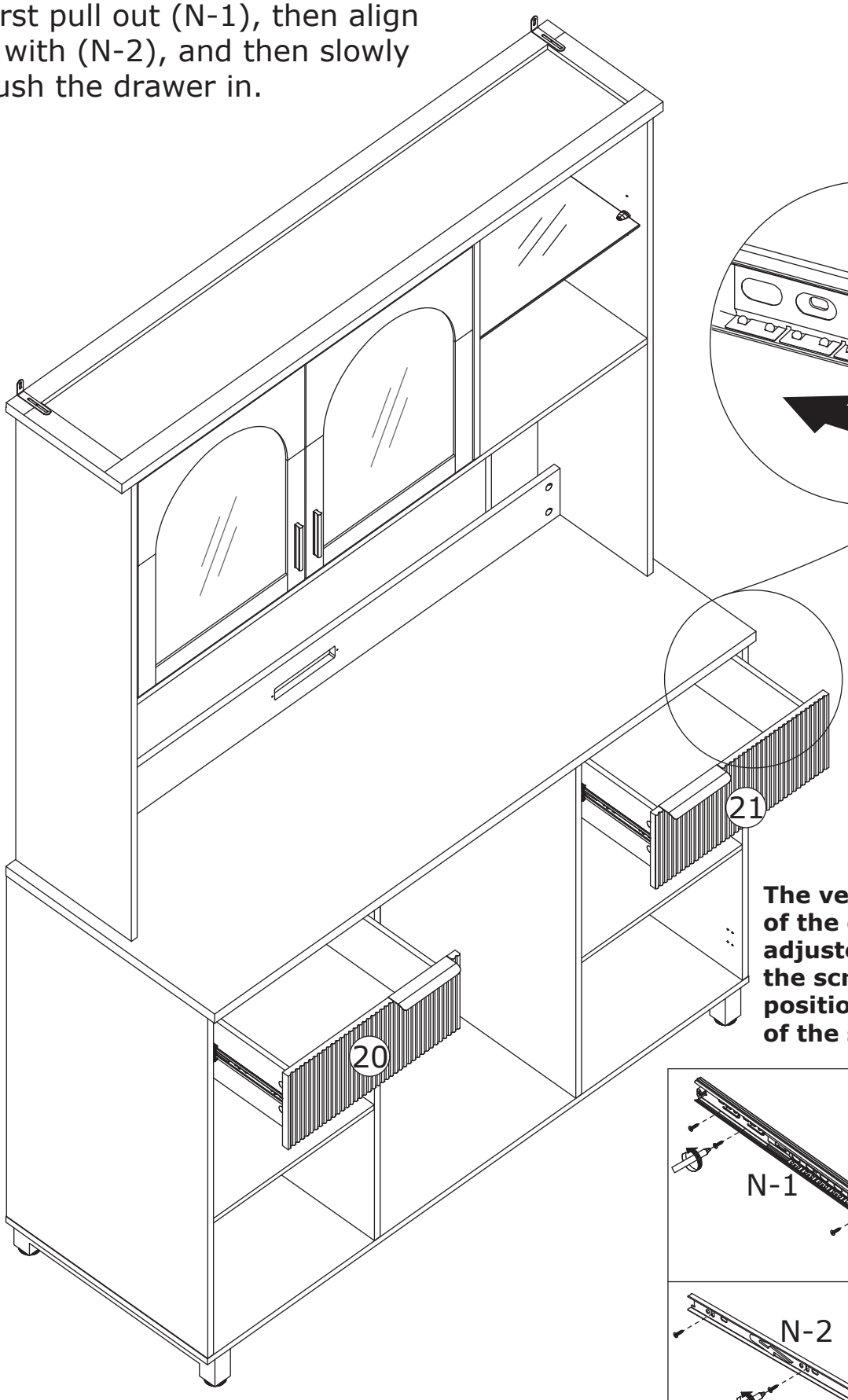

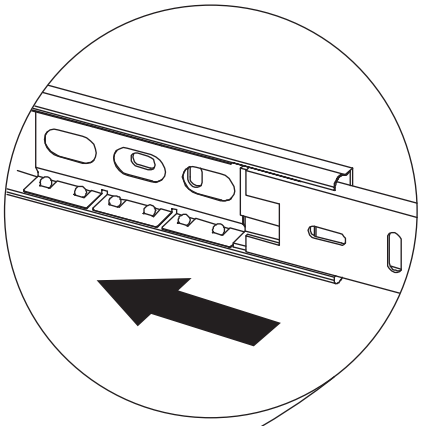

The vertical position of the drawer can be adjusted by adjusting the screw fixing position on part N-1 of the slide rail.

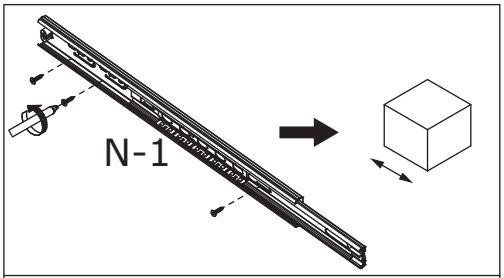

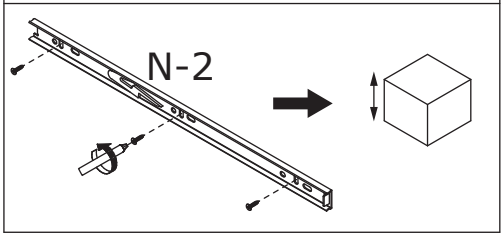

39

D x 8	F x 4	H x 2	L x 4	
M3.5 x 14 mm			M3.5 x 12 mm	

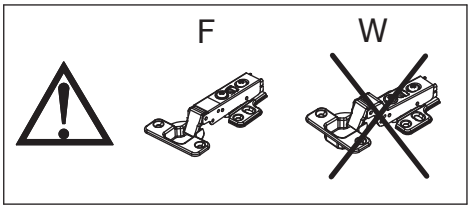

Secure hinge (F) to board 18 and 19 using screw (D), then secure handle (H) using screw (L).

40

D x 16



M3.5 x 14 mm

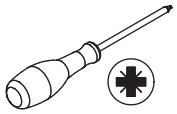

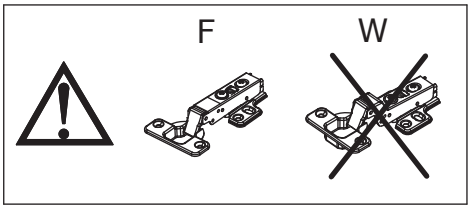

Connect board 18 and 19 to boards 13 and 14 via securing hinges using screw (D).

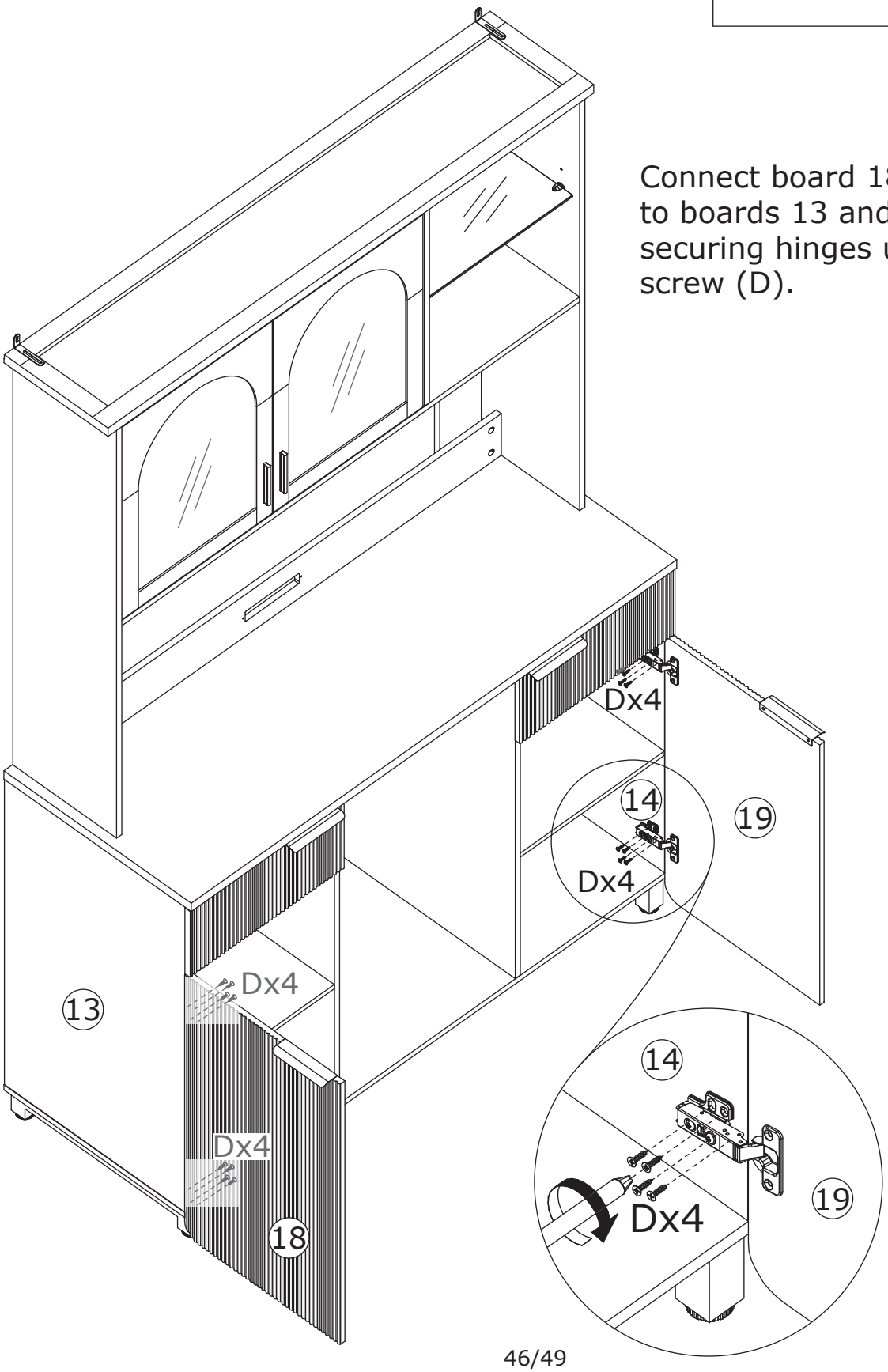

41

L x 2



M3.5 x 12 mm

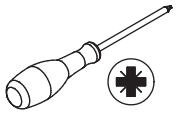

Fix power outlet 37 to board 8 using screw (L).

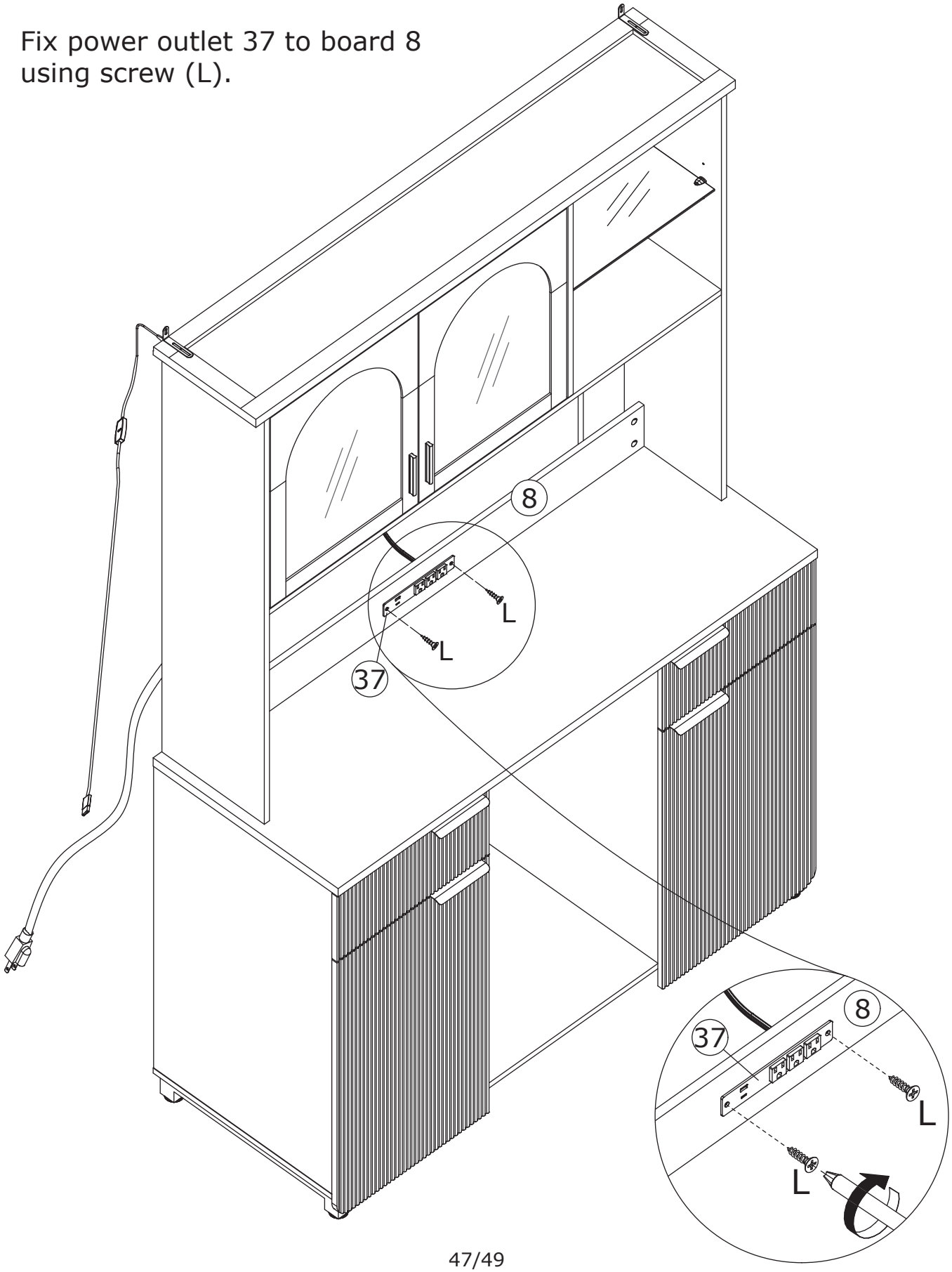

42

T x 2

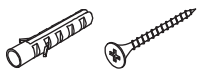

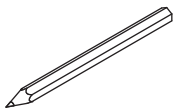

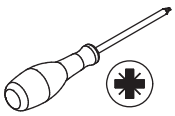

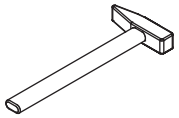

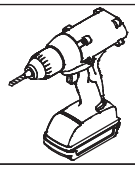

Install anti-tipping device as shown.

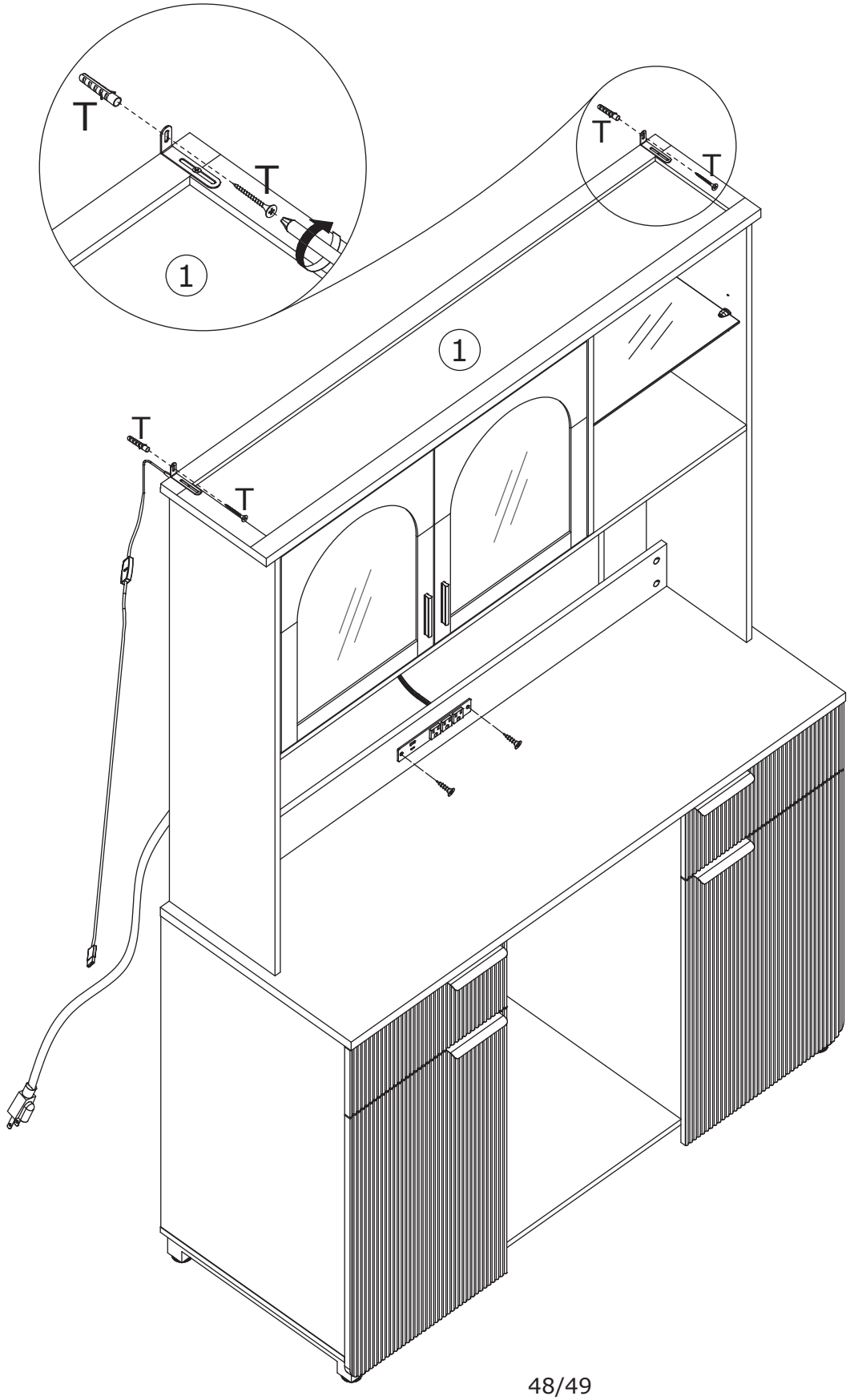

1.

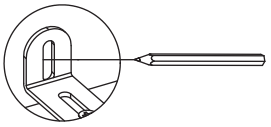

2.

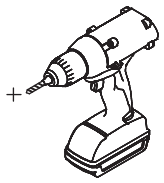

3.

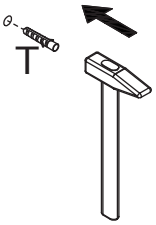

4.

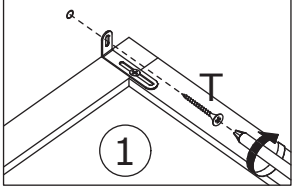

43

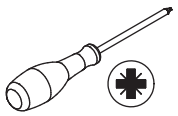

If the door panels are not aligned, please adjust the screws on the hinges according to the illustration.

Or you can search this link to view the teaching video.
https://youtu.be/n0Lb36SoODM

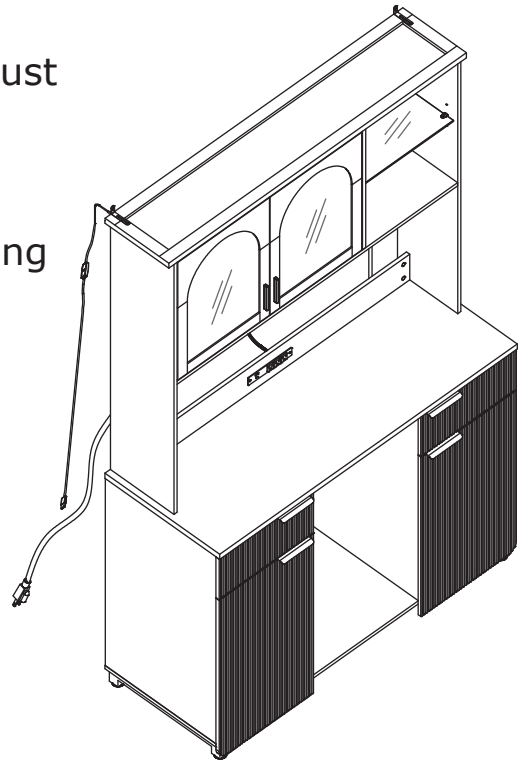

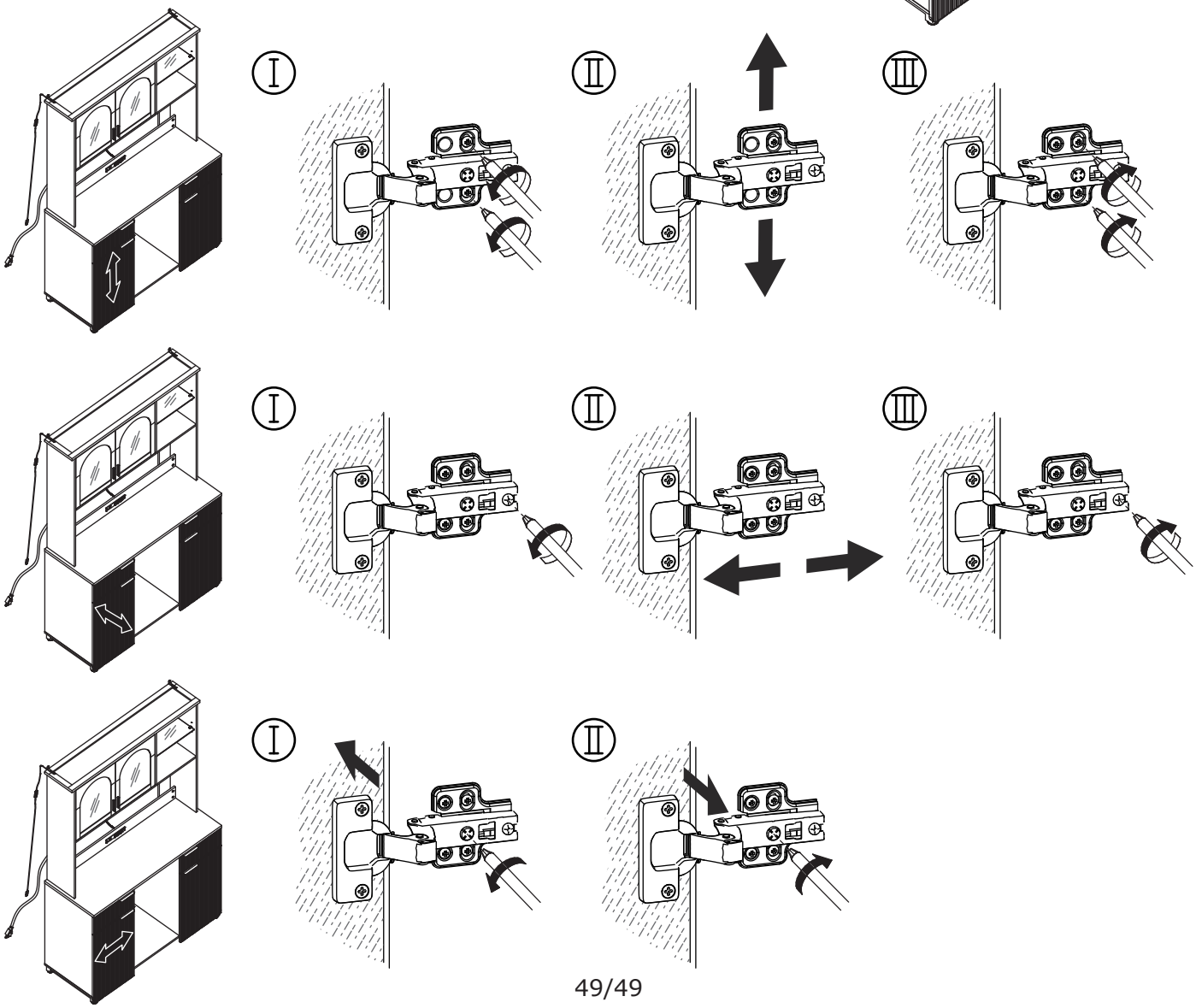

WARRANTY

WARRANTY CLAIMS

- There is a 30-day warranty for broken furniture or any other problems that do not work properly. The warranty will start from the date of purchase which must be verified by proof of purchase.

- Before making a claim, we may be able to answer your query, simply call us. Please leave your purchase order number, along with some details of the problem, if you want a replacement part. We will arrange within 48 hours. If there is out of stock, we will reply with a shipping date.

- The product must be used in accordance with the instructions provided. For health reasons.

- For other reasons, if the furniture needs to be returned, it must be cleaned and dried and operated within 30 days of receipt.

Type of Warranty Claim

- Failure to follow the furniture instructions will invalidate the warranty. Attention please.

- Does not include damage during installation, but includes damage during transportation.

Scope of responsibility

- Shall not bear any responsibility for misuse or user damage and / or loss of parts during the installation of furniture.

- After using, the damage and scratches of the furniture are not covered by the warranty.

The Warranty Relates to All Bought in The Us and Covers The Following Areas

- Sheet parts: 1 month from the date of purchase.

- Electrical parts: 1 month from the date of purchase.

RETURNS

CHANGED YOUR MIND AND NEED TO RETURN YOU ITEM?

PLEASE FOLLOW THE BELOW INSTRUCTIONS:

- If you have purchased and have simply changed your mind, follow the retailer's instructions for returns.

DEFECTIVE ITEMS

- If your item is defective in any way, i.e. it doesn't work but you can't identify why, in the first instance, please call us.

DAMAGED ITEMS

- If you receive an order with obvious shipping damage from the retailer, then we suggest the delivery is refused. If the delivery has been accepted and then shipping damage is found, please follow the specific instructions advised by the retailer.
  In all circumstances please save all packaging material and paperwork for the order. Please be aware that if you dispose of packaging material or attempt to return the merchandise without contacting the fulfiller, you jeopardise your chances of making a claim, and you may not receive a credit for the return.

AFTER-SALES CONTACT


adelahu@fufugaga.com


208-820-0068