Storage cabinet

Assembly Instruction

*Please follow this instruction to avoid assembly errors.

⚠ WARNING:

Important: Retain these instructions for future reference.
Assembly to be carried out by a competent adult only.
During assembly children should be kept away from the prduct due to possible risk of injury.
Do not use this item if any components are missing or damaged.
This product is suitable for children in the age range of children for 3-12 years.
Regularly check all fastenings to ensure that they properly tightened.
To avoid danger of suffocation, keep plastic bags away from babies and children.
Do not use this bag in cribs, beds, carriages or playpens. This bag is not a toy.

MAINTENANCE:

Please clean the product with dry soft cloth,don't clean this product with chemical cleaners: alcohol, ammonia water, glass cleaner, etc.
Please keep the product away from fire, substances flammable and humid environments to prevent damage.

Product Parts

1 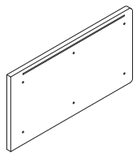	2 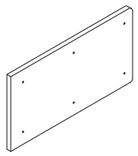	3 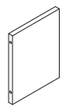
x1	x1	x2
4 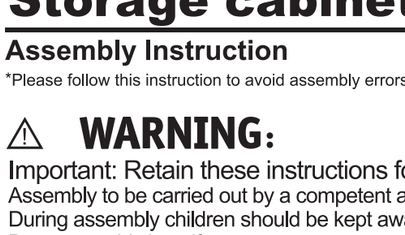	5 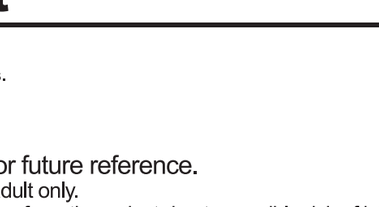	6
x1	x1	x1
7 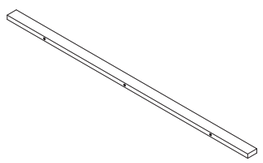	8 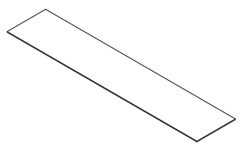	9 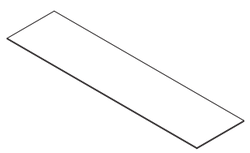
x2	x1	x1
11 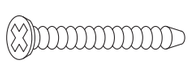 M4x45mm	12  M6x50mm	13 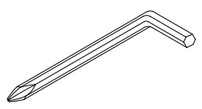
x6	x12	x1

15 	16 	17 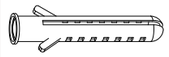	18 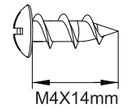 M4X14mm	19 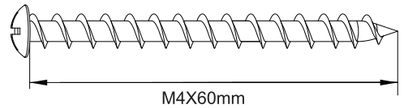 M4X60mm
x2	x8	x2	x4	x2

1

11 6PCS
M4x45mm

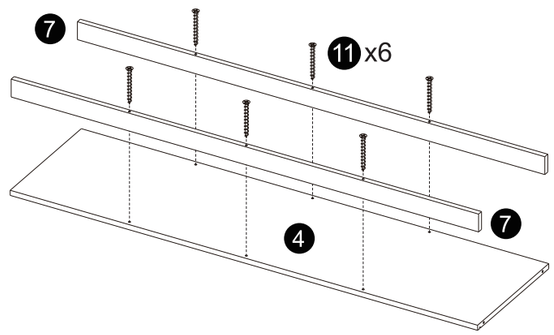

2

14 8PCS
M8x30mm

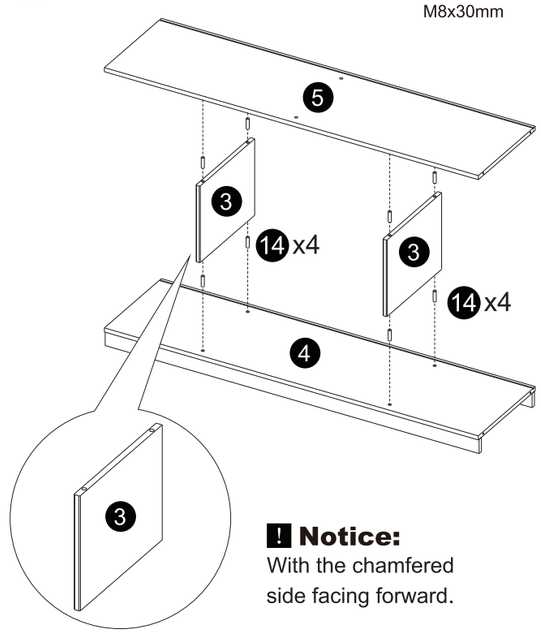

! Notice:
With the chamfered side facing forward.

3

12 4PCS
M6x50mm

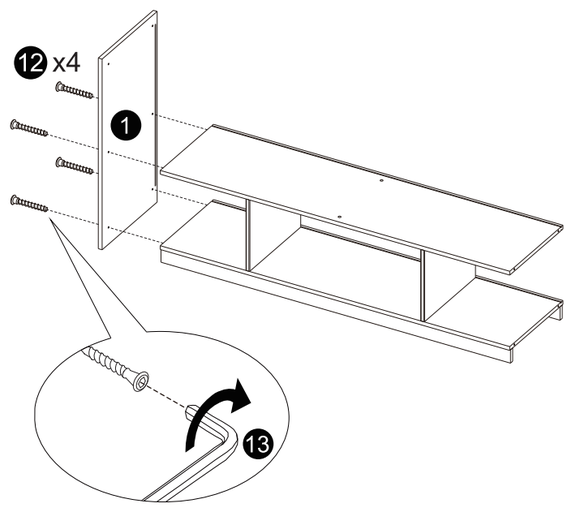

4

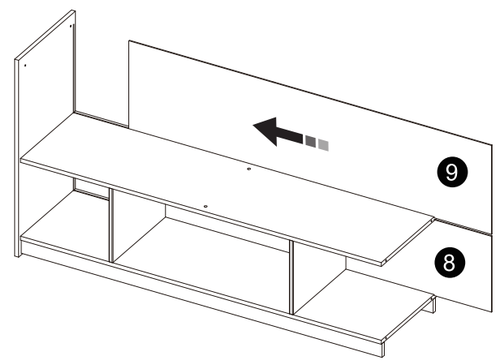

5

14 4PCS
M8x30mm

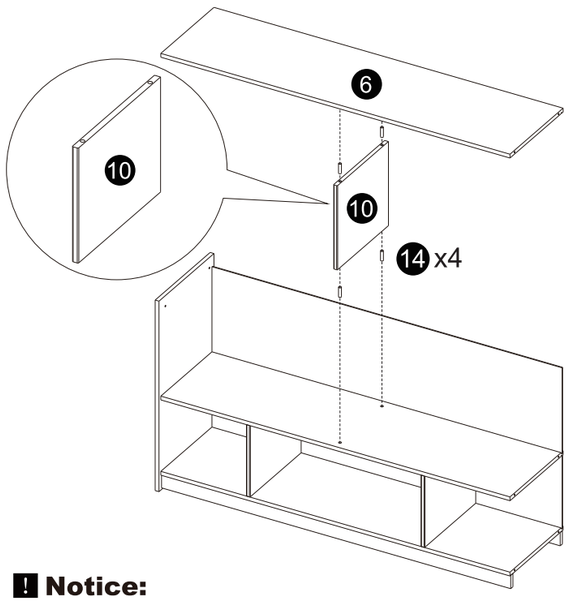

! Notice:
With the chamfered side facing forward.

6

12 2PCS
M6x50mm

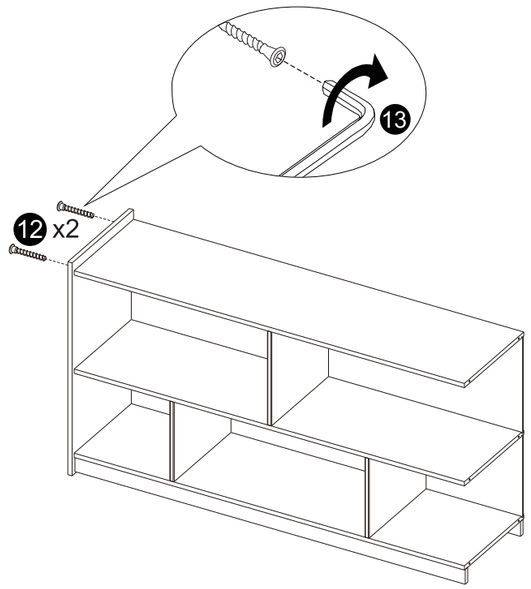

7

12 6PCS
M6x50mm

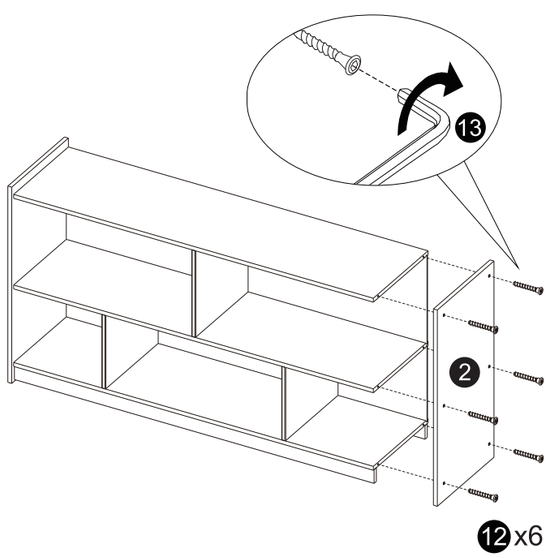

8

15 2PCS
16 4PCS
18 4PCS
M4X14mm

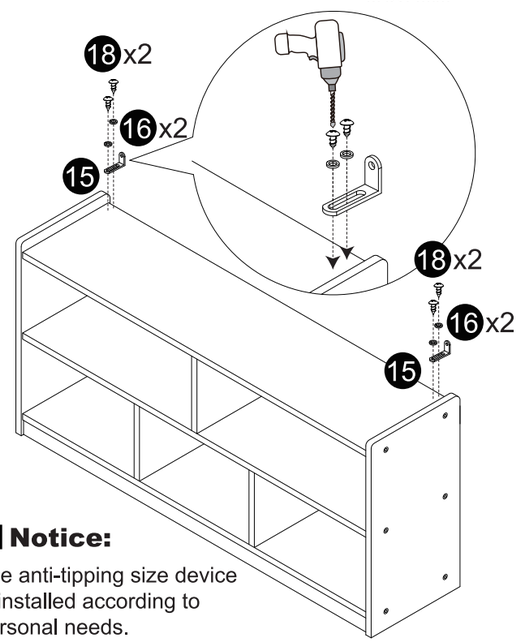

! Notice:
The anti-tip size device is installed according to personal needs.

9 Instruction of anti-tip assembly

17 2PCS

1 Step 1

Mark the drilled holes on the wall with a pen.

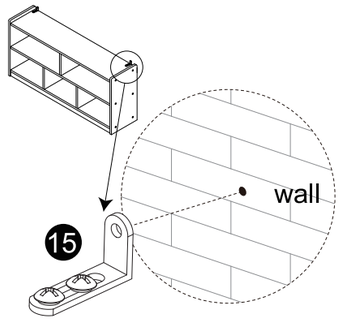

2 Step 2

Drill the marked positions with a 6mm diameter electric drill bit. The depth of holes should longer than the length of expansion hose P06.

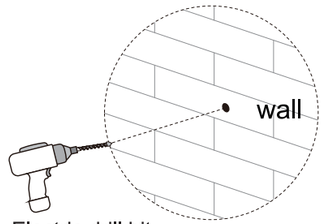

Electric drill bit

2 Step 3

Insert expansion hose P06 into the drilled hole until it is completely flush with the wall.

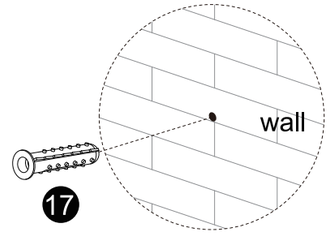

16 4PCS
19 2PCS
M4X60mm

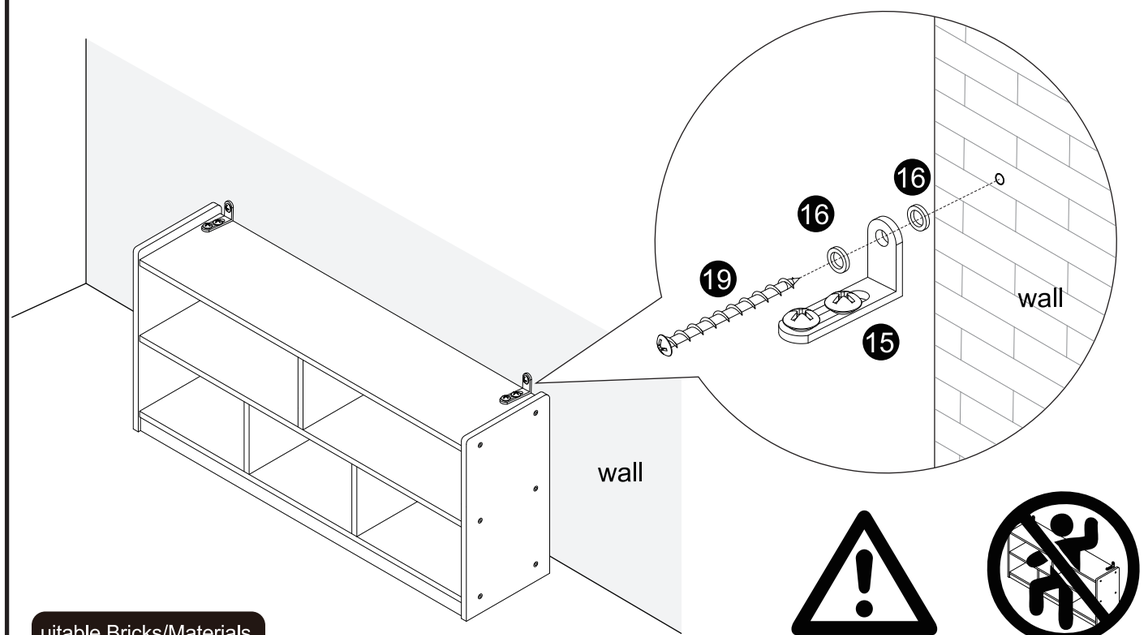

uitable Bricks/Materials

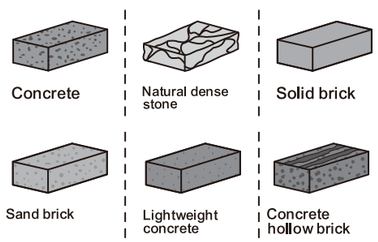

! Notice:
The anti-tip assembly can be secured on the wall to prevent the dresser from tipping during play.
It is recommended to place the dresser against the wall during use.
Avoid placing the dresser in open spaces and prevent your child from climbing on it.
The hardware accessories are primarily suitable for being assembled on walls shown in the instruction.
For other situations, consult your local hardware store to choose more suitable accessories.