ASSEMBLY INSTRUCTIONS

C-001

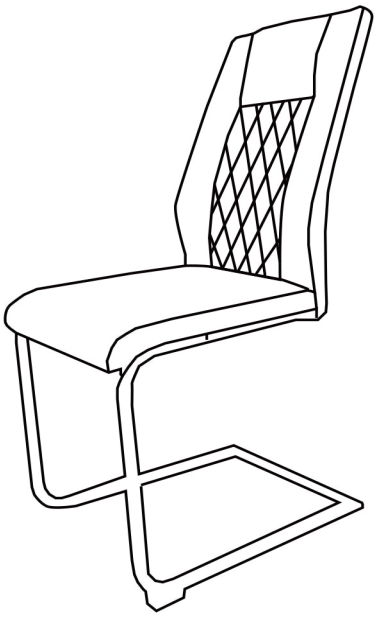

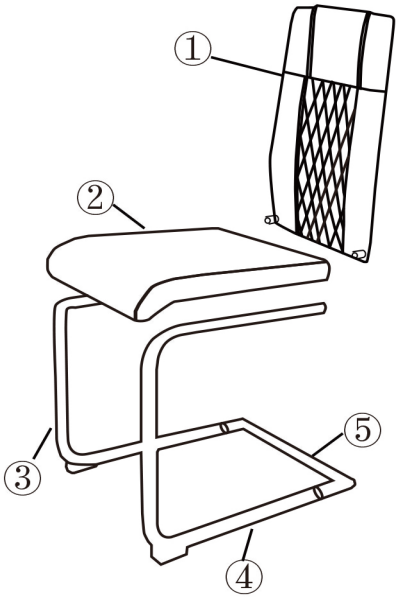

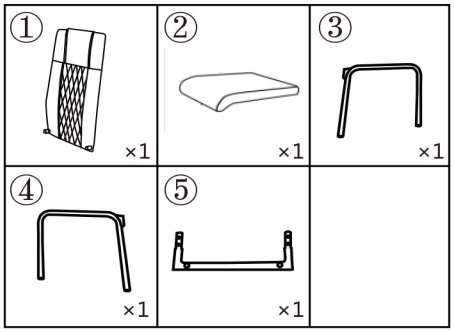

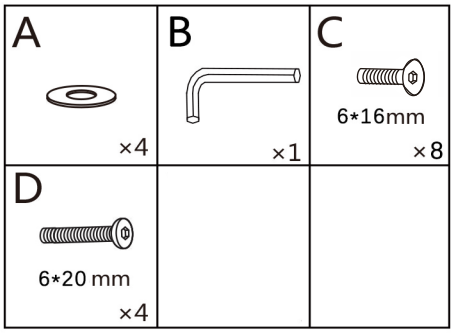

STEP 1 ③ and ④ are connected to ⑤ respectively, is inserted into the corresponding hole and tightened with .

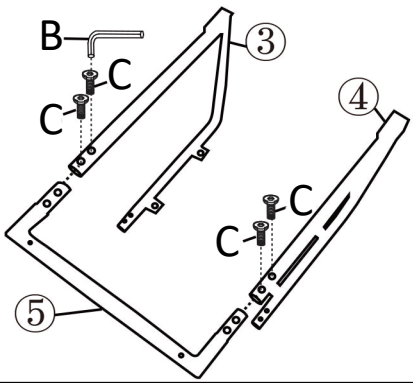

C×4
B×1

STEP 2 Connect ① to ③ and ④ respectively, insert C into the corresponding hole and tighten with .

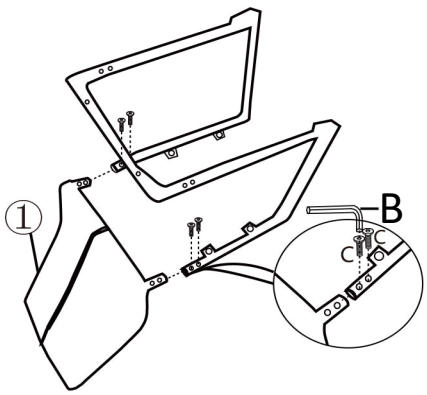

C×4
B×1

STEP 3 Connect ② to ③ and ④ respectively, insert D and A into the corresponding holes in turn and tighten with .

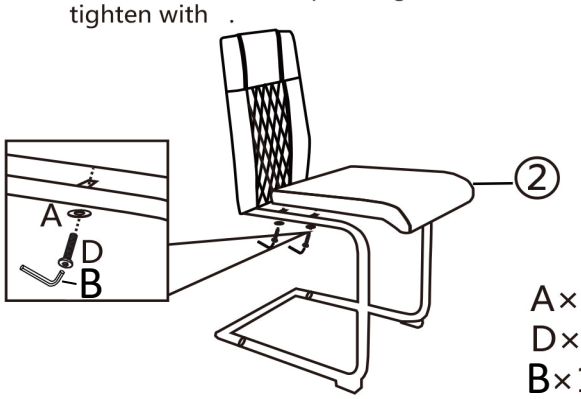

A×4
D×4
B×1

STEP 4 Installation complete

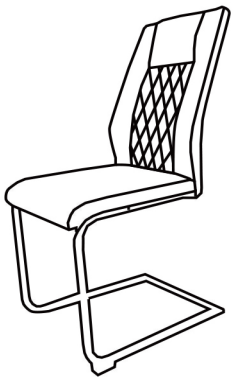

If you find any damage caused in transit, please contact us to solve the issue.
Please contact us in advance if you want to return it. That's very important for us.
Thank you for your understanding.