ASSEMBLY INSTRUCTION

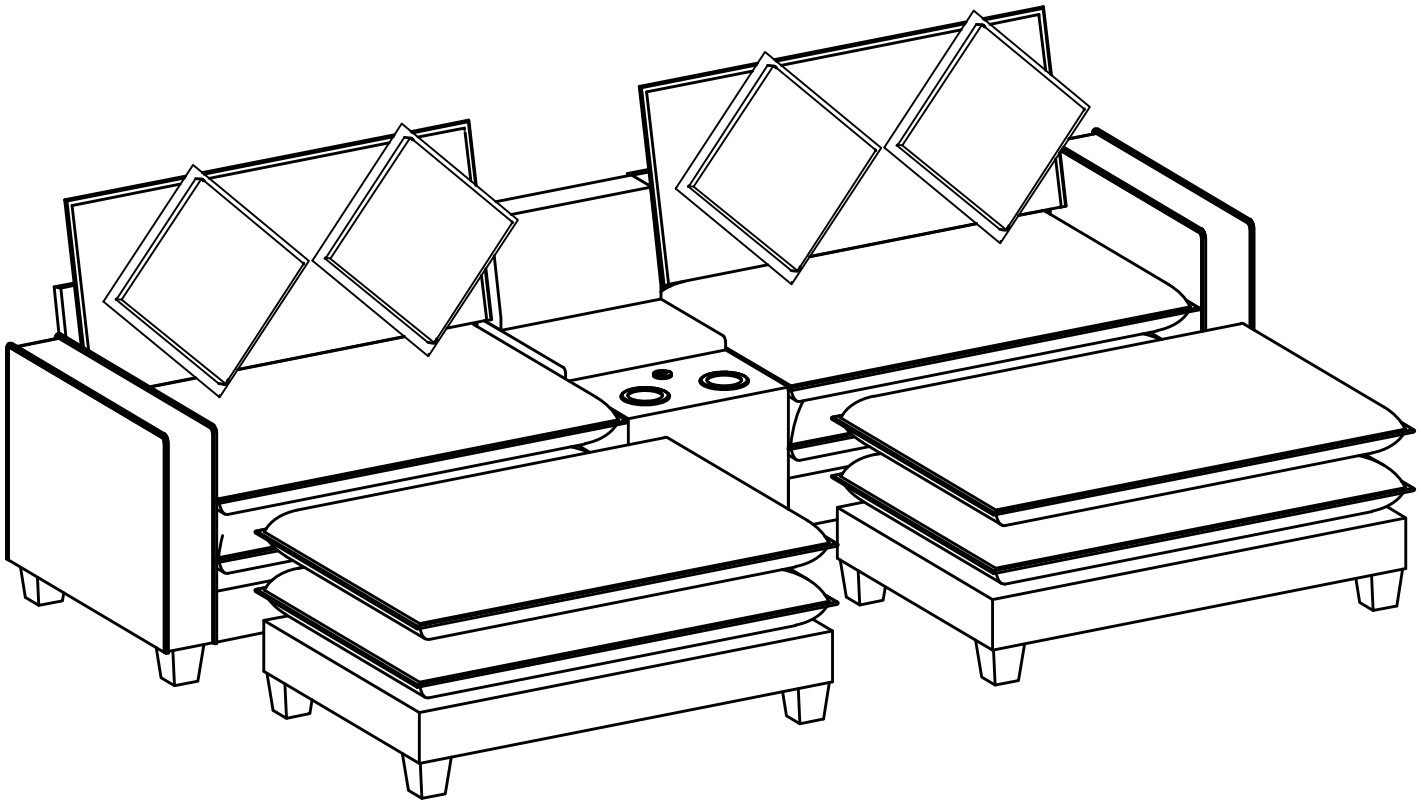

COMPONENT LIST

NO.	DRAWING	QTY	DESCRIPTION
Ⓐ	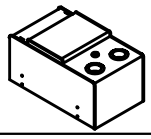	1	Center Arm
Ⓑ		1	Short Backrest
Ⓒ	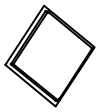	4	Pillows
Ⓓ		16	Legs
	HARDWARE	**QTY**	**DESCRIPTION**
①	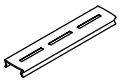	2	Two-Headed Pads
②		1	Allen Wrench
③		24	Bolt 5/16 x 45mm
④		24	Flat Washer Ø8 5/16"

COMPONENT LIST

NO.	DRAWING	QTY	DESCRIPTION
Ⓔ		2	Arms
Ⓕ		2	Backrests

COMPONENT LIST

NO.	DRAWING	QTY	DESCRIPTION
Ⓖ	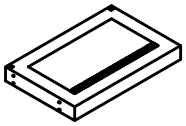	2	Love Seat Frames
Ⓗ	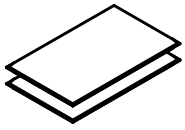	2	Seat Cushions
Ⓘ	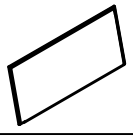	1	Back Cushion

COMPONENT LIST

H	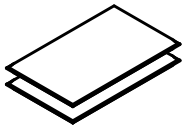	2	Seat Cushions
I	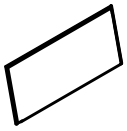	1	Back Cushion
J	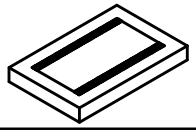	2	Otoman Frames

PARTS LIST

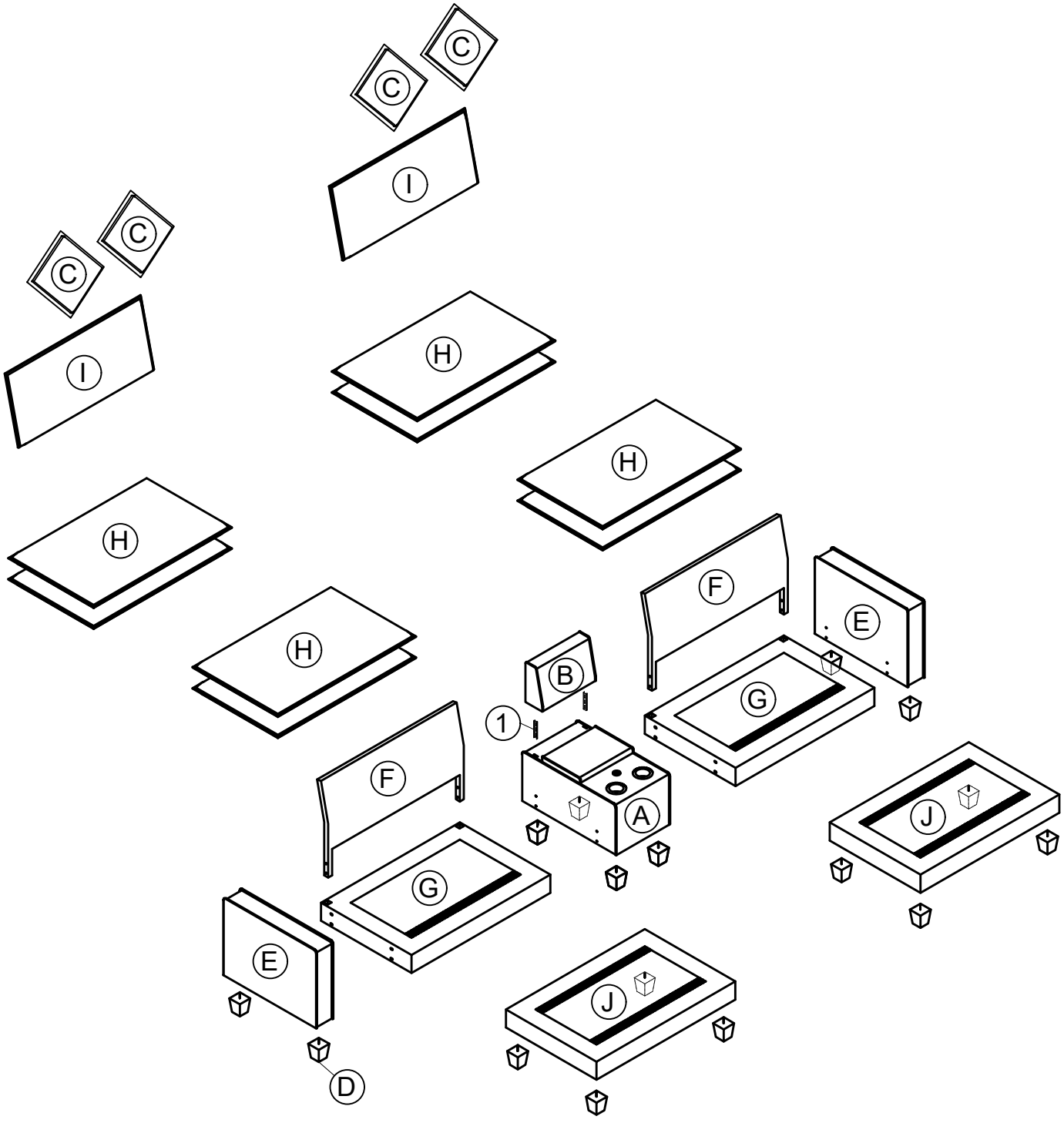

PARTS LIST

A	B	C	D	E	F
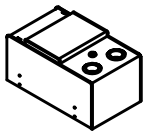		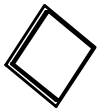		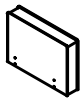	
Center Arm x 1 pc	Short Backrest x 1 pc	Pillows x 4 pcs	Legs x 16 pcs	Arms x 2 pcs	Backrests x 2 pcs

G	H	I	J
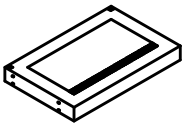	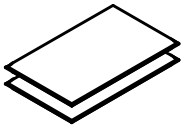	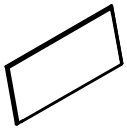	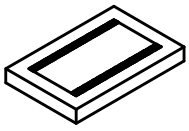
Love Seat Frames x 2 pcs	Seat Cushions x 4 pcs	Back Cushions x 2 pcs	Otoman Frames x 2 pcs

HARDWARE

1	2	3	4
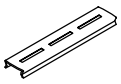			
Two-headed pads x 2 pcs	Allen Wrench x 1 pc	Bolt 5/16" x 45mm x 24 pcs	Flat Washer Ø8 5/16" x 24 pcs

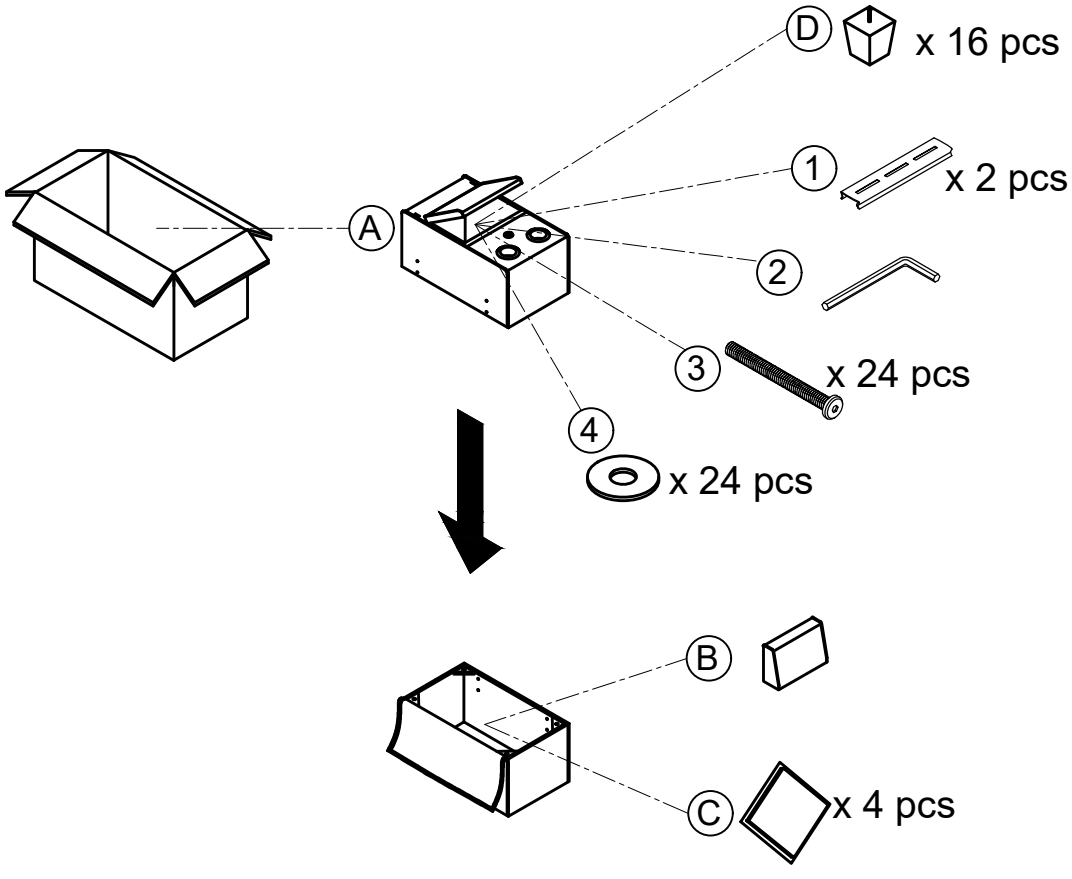

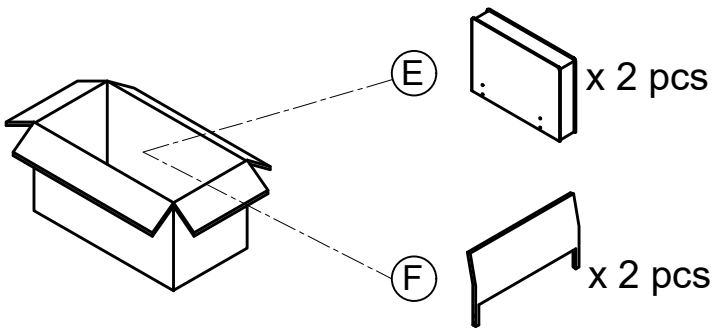
E
x 2 pcs
F
x 2 pcs

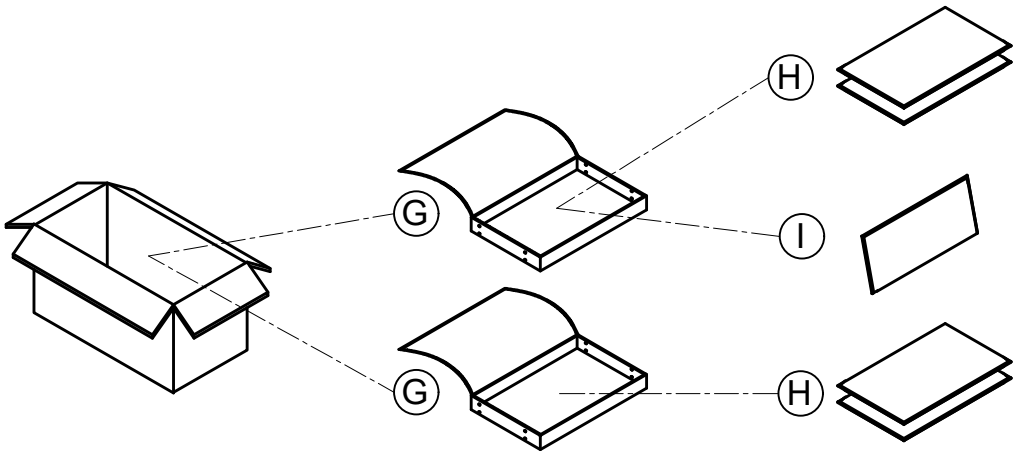
H
G
I
G
H

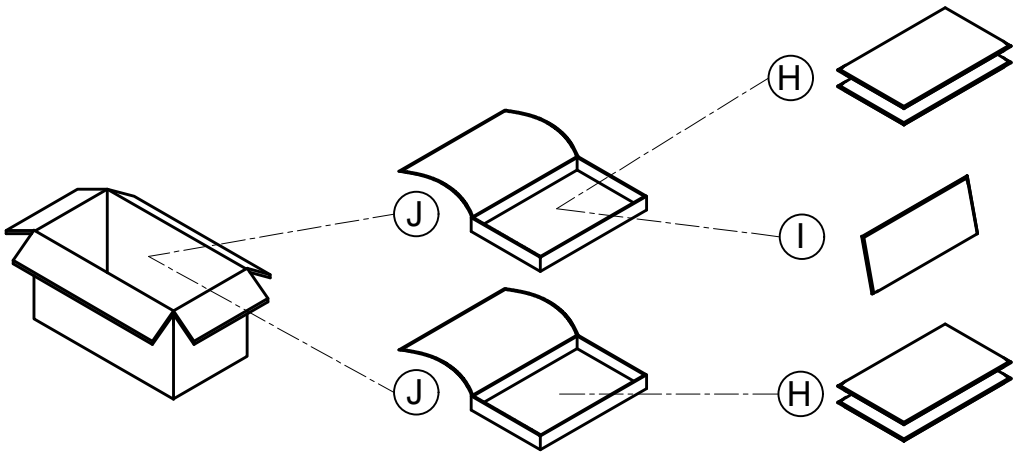
H
J
I
J
H

STEP 1:

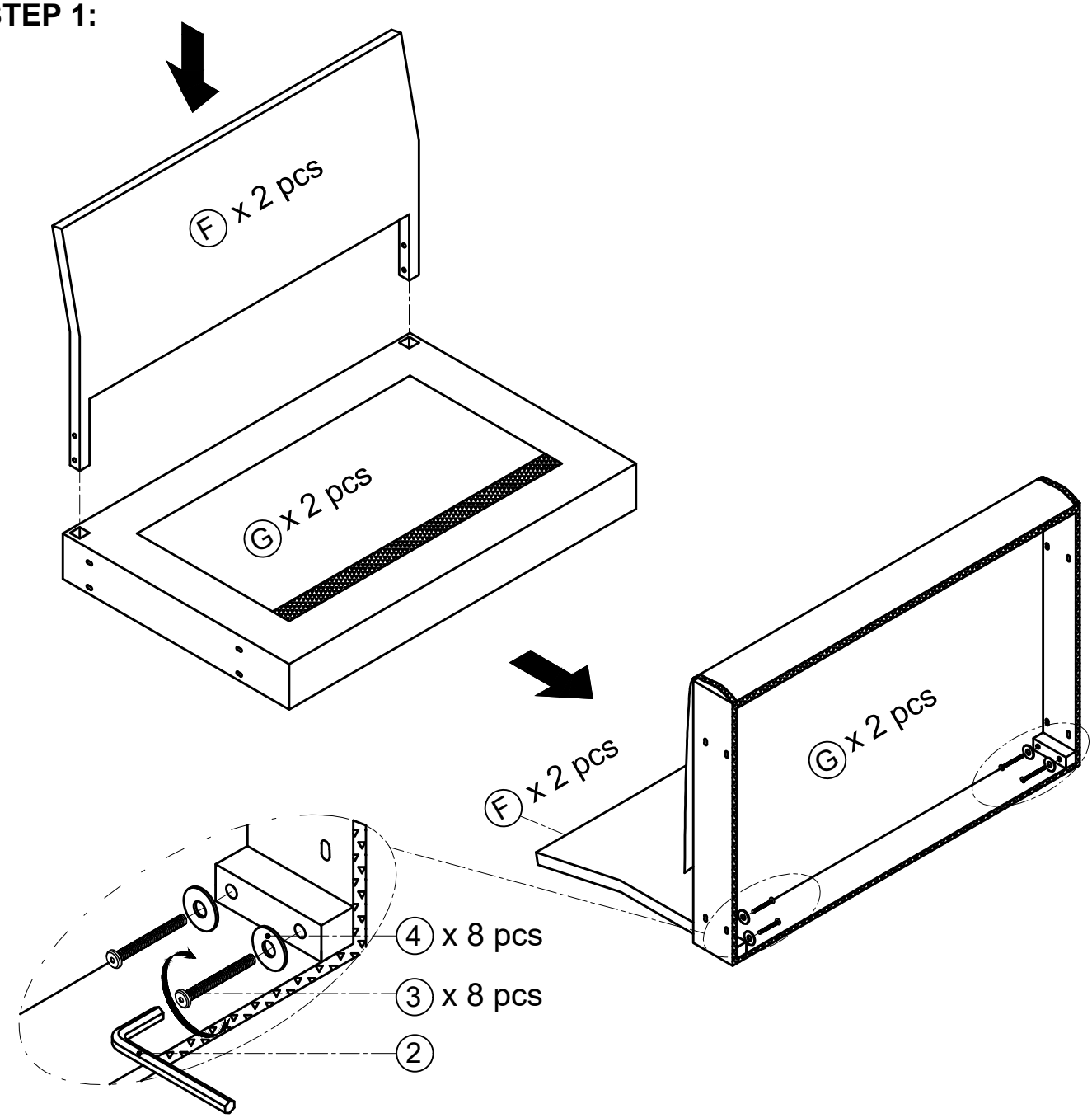

STEP 2:

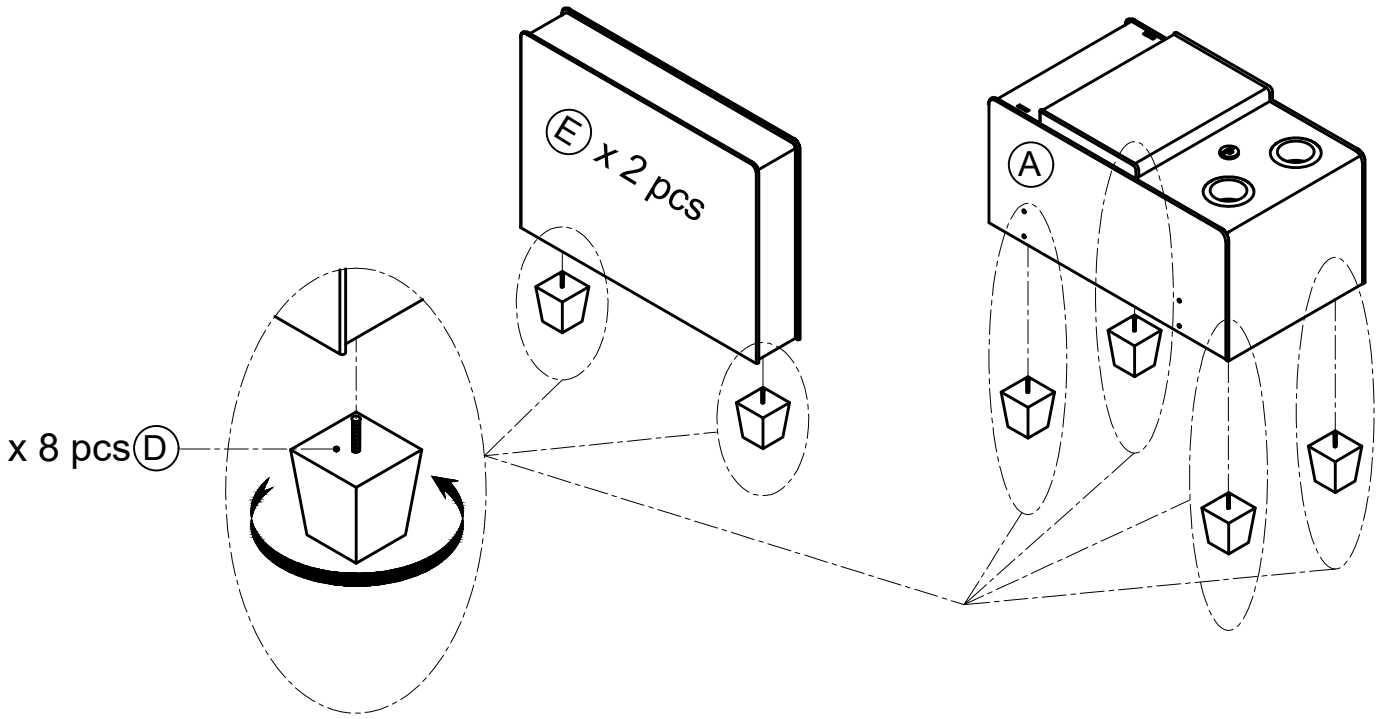

STEP 3:

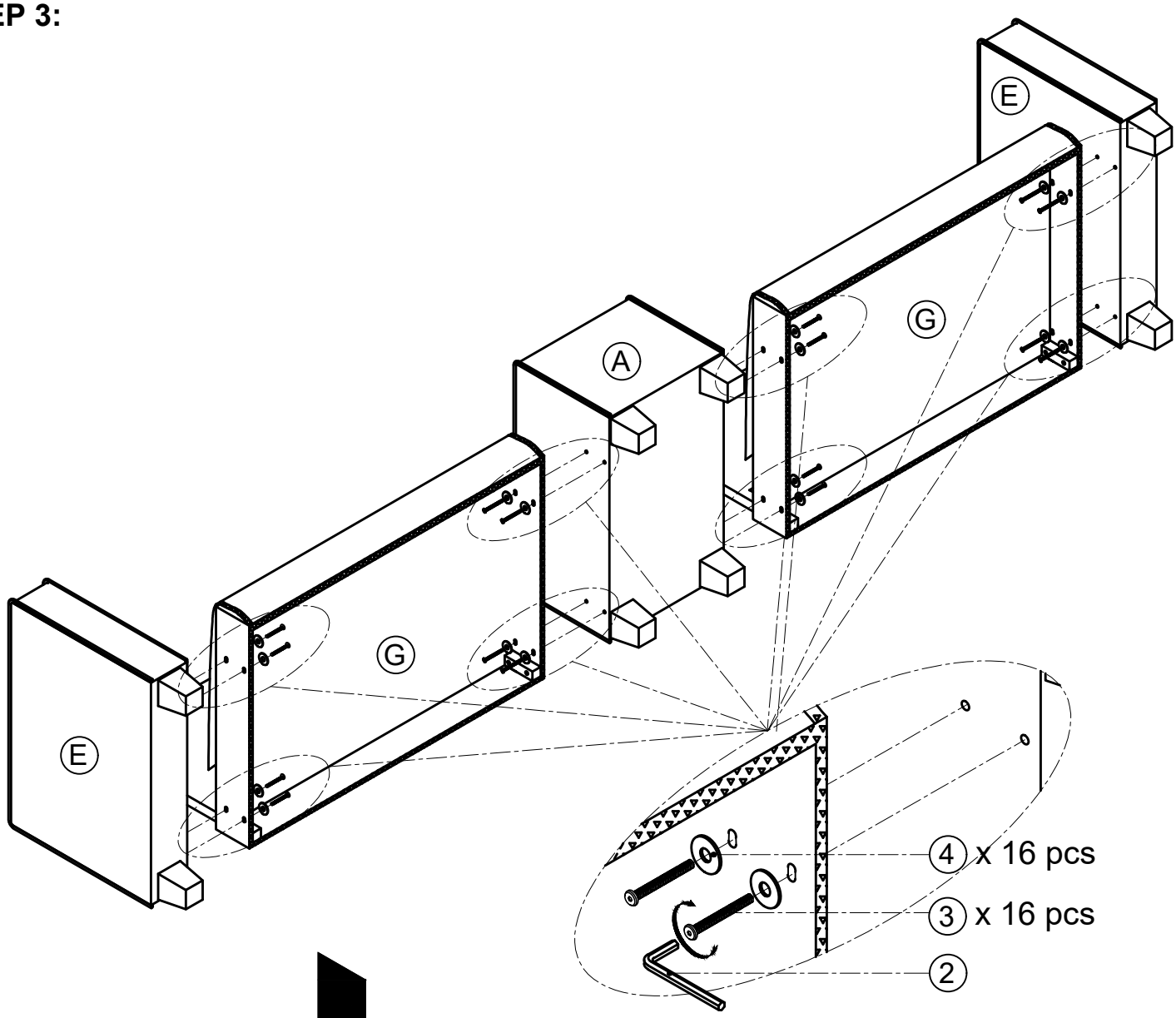

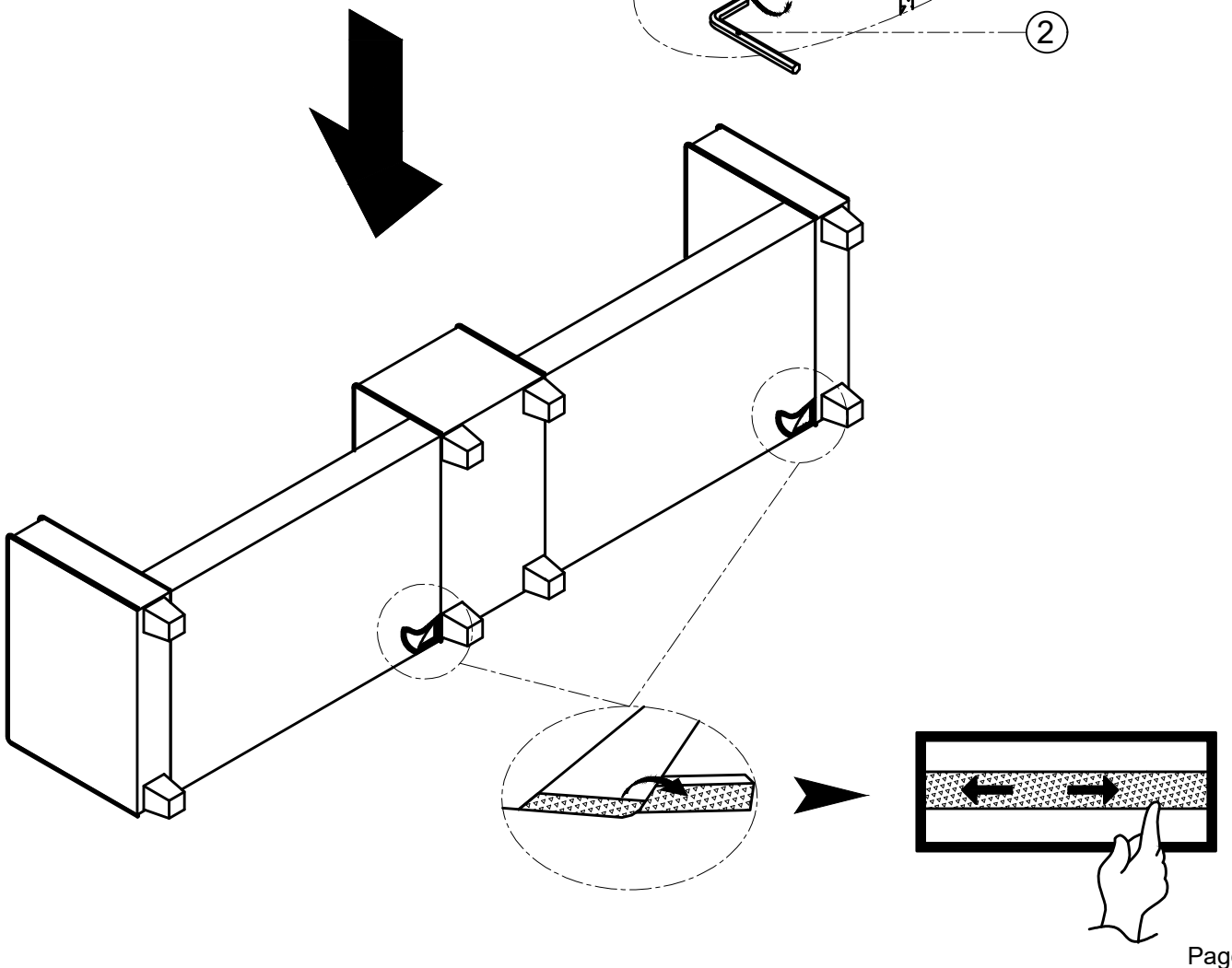

STEP 4:

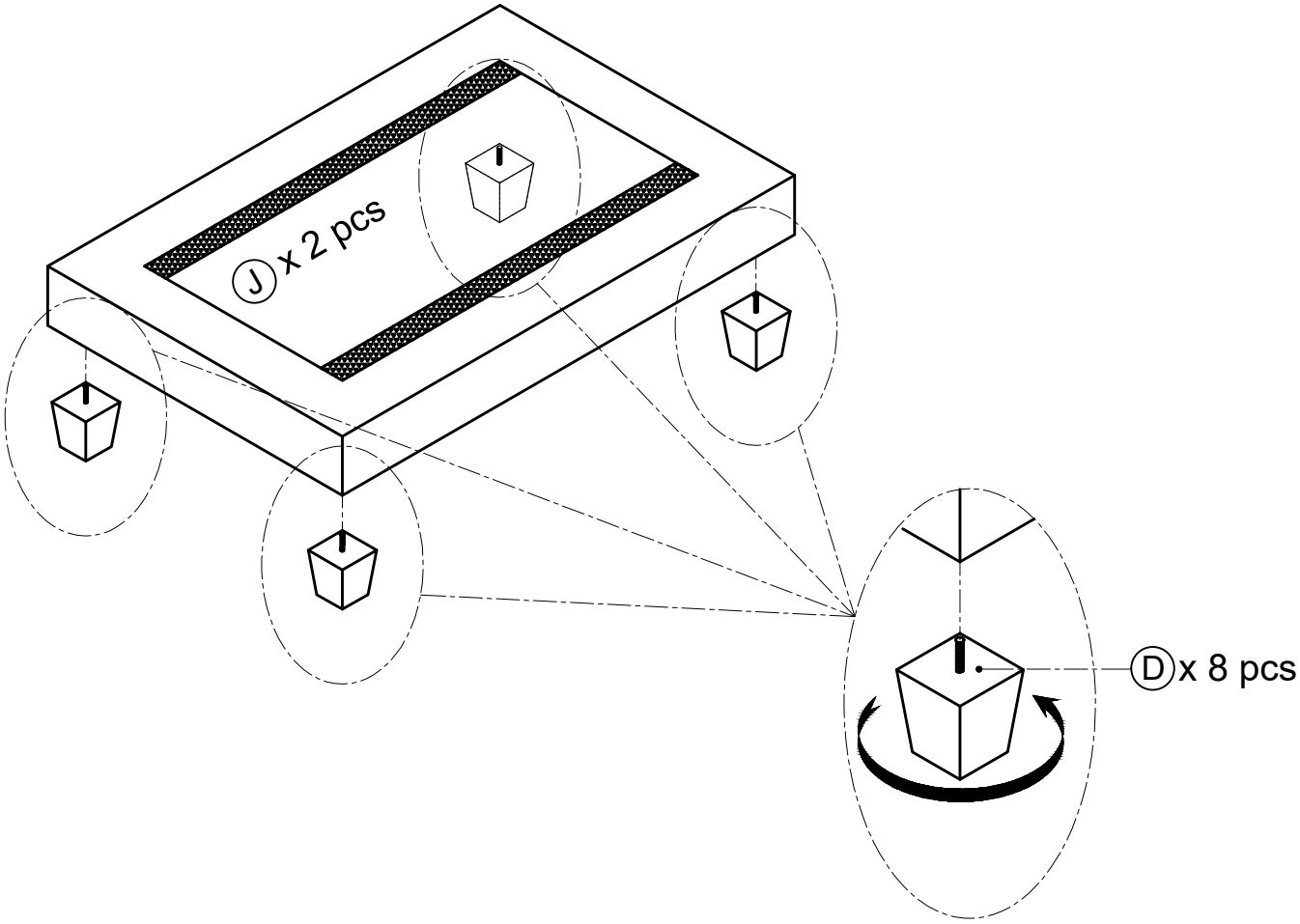

STEP 5:

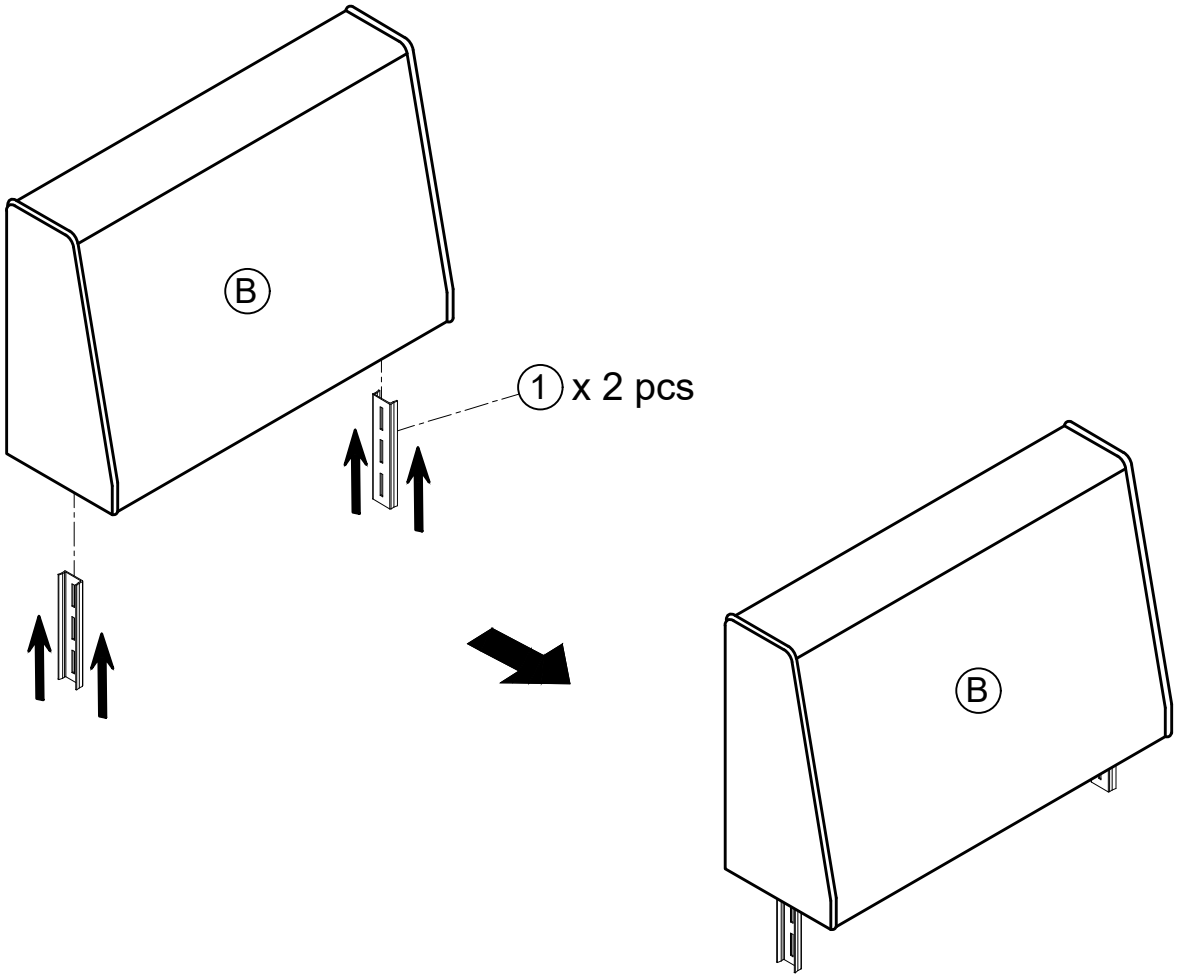

STEP 6:

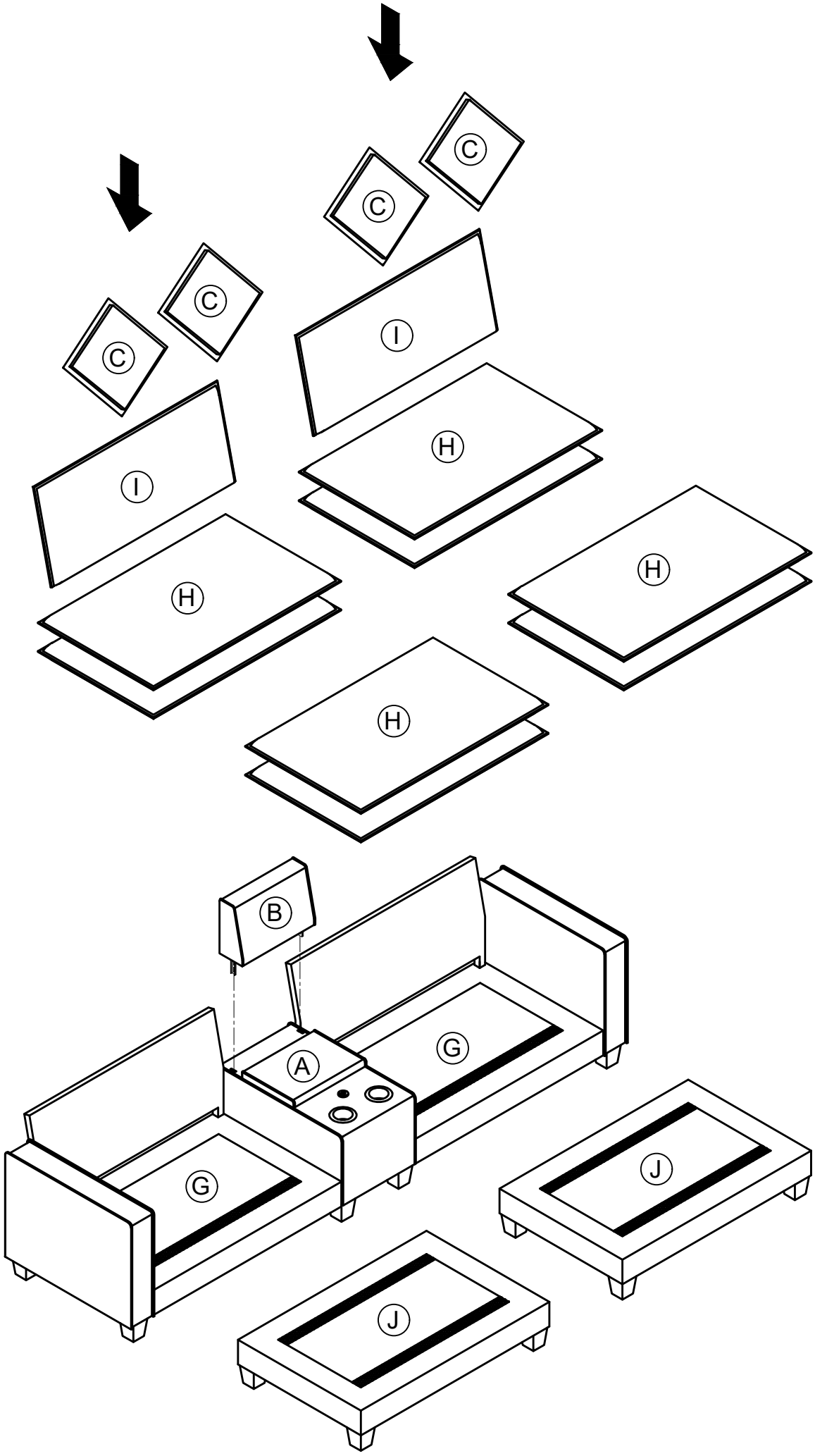

Helpful Hints

·Move your new furniture carefully, with two people lifting and carrying the unit to its new location.
·Your furniture can be disassembled and reassembled to move.
·Clean the product with a soft damp cloth. DO NOT use harsh chemicals or abrasive cleaners.

COMPLETED

