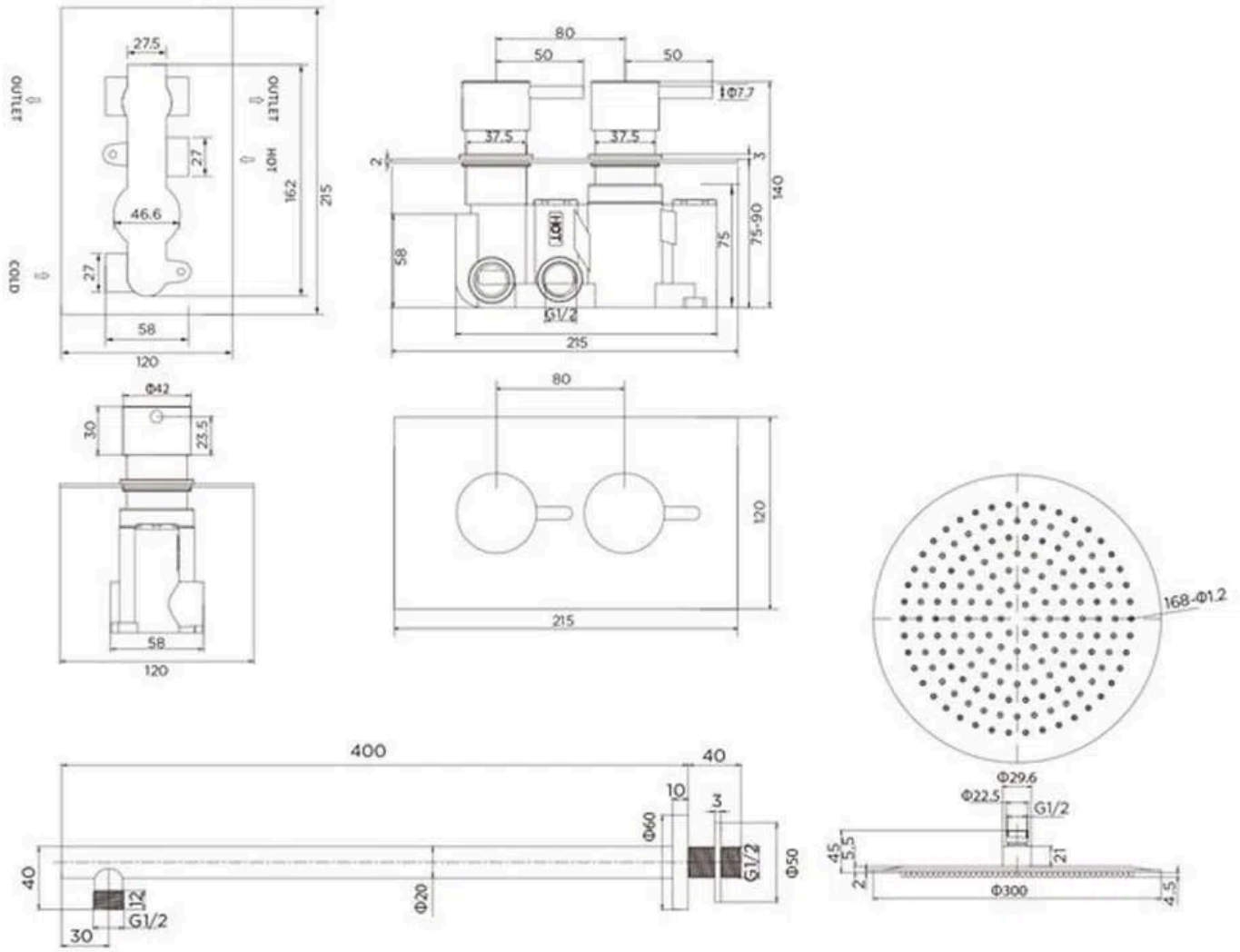
27.5
OUTLET
HOT
COLD
27
46.6
162
215
58
120
80
50
50
Φ7.7
37.5
37.5
2
3
140
75-90
75
58
G1/2
215
Φ42
30
23.5
58
120
80
120
215
168-Φ1.2
400
40
10
3
Φ60
G1/2
Φ50
40
G1/2
30
Φ20
Φ29.6
Φ22.5
G1/2
45
5.5
21
2
Φ300
4.5

unit: mm