V5

Assembly Instruction

QUEEN/FULL

IMPORTANT:

PLACE ALL PARTS ON A CLEAN AND SMOOTH SURFACE SUCH AS A RUG OR CARPETTO
AVOID THE PARTS FROM BEING SCRATCHED
KINDLY FOLLOW THE ADDEMBLY INSTRUCTIONS STEP
DO NOT TIGHTEN ALL SCREWS UNTIL THE BED IS FULLY SET-UP

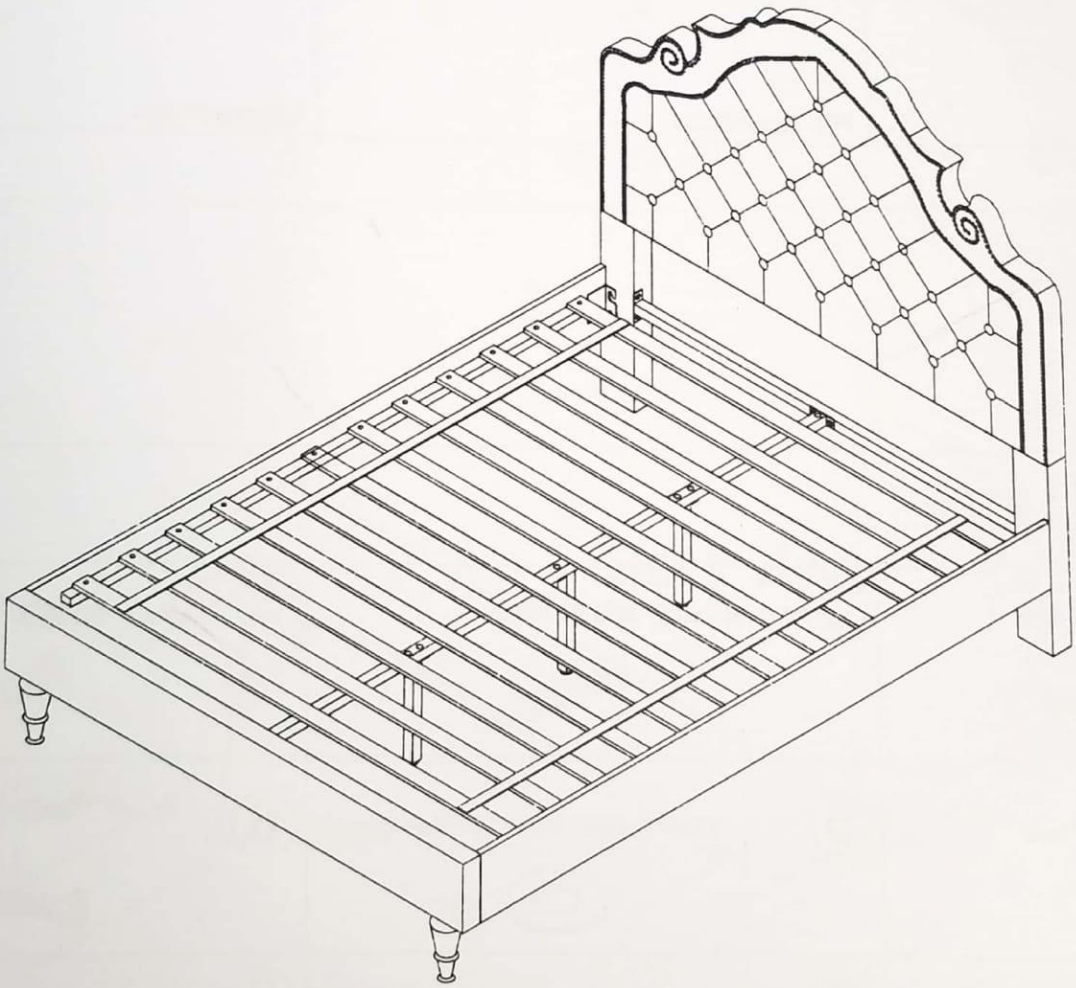

Scanned by CamScanner

PARTS LIST:

Ⓐ Part Ⓒ, Ⓕ, Ⓗ, Ⓘ & hardwares hidden inside of the headboard, plz lift the cover. Headboard=1pc	Ⓑ 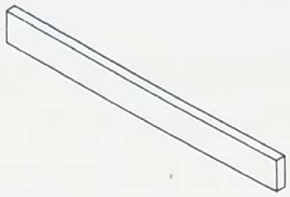 Footboard=1pc	Ⓒ FB legs=2pcs
Ⓓ 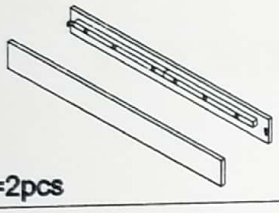 Siderail=2pcs	Ⓔ 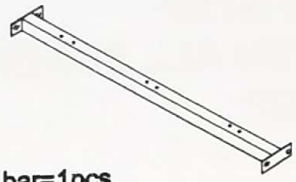 Support bar=1pcs	Ⓕ Support leg=3pcs
Ⓖ 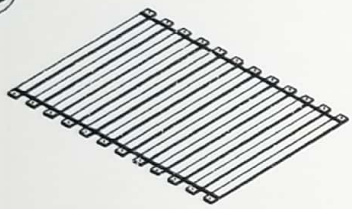 Slats=1units	Ⓗ HB legs=2pcs	Ⓘ 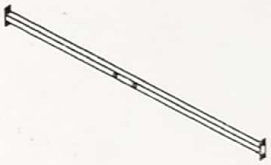 Crossband=1pc

HARDWARE LIST:

① Allen Key⌀5/16″=1pc	② Bolt ⌀5/16″X2″L=12pcs	③ Bolt ⌀5/16″X 1-1/2″L=14pcs
④ Spring Washer=20pcs	⑤ Flat Washer ⌀5/16″X⌀19mm=54pcs	⑥ Screw 10mmX1-1/4″L=24pcs
⑦ Nut=8pcs	⑧ Wrench=1pc	⑨ Flat Washer ⌀5/16″X⌀22mm=4pcs

Scanned by CamScanner

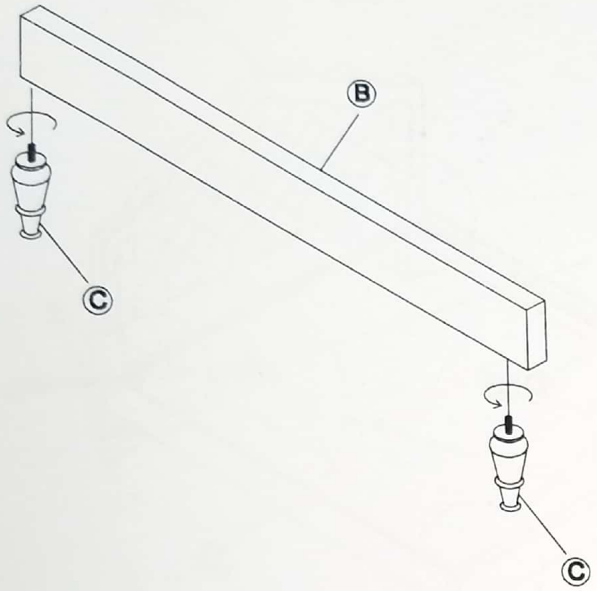

step 1

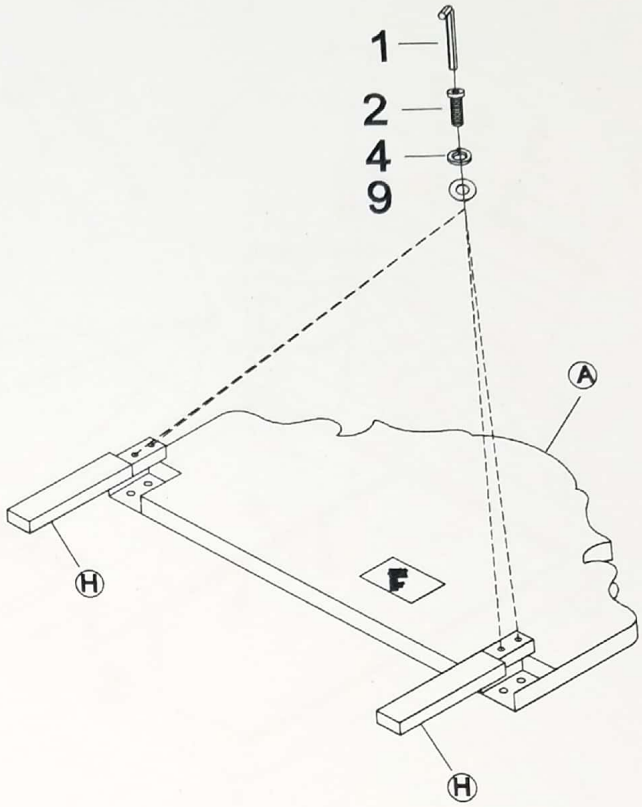

step 2

Back view

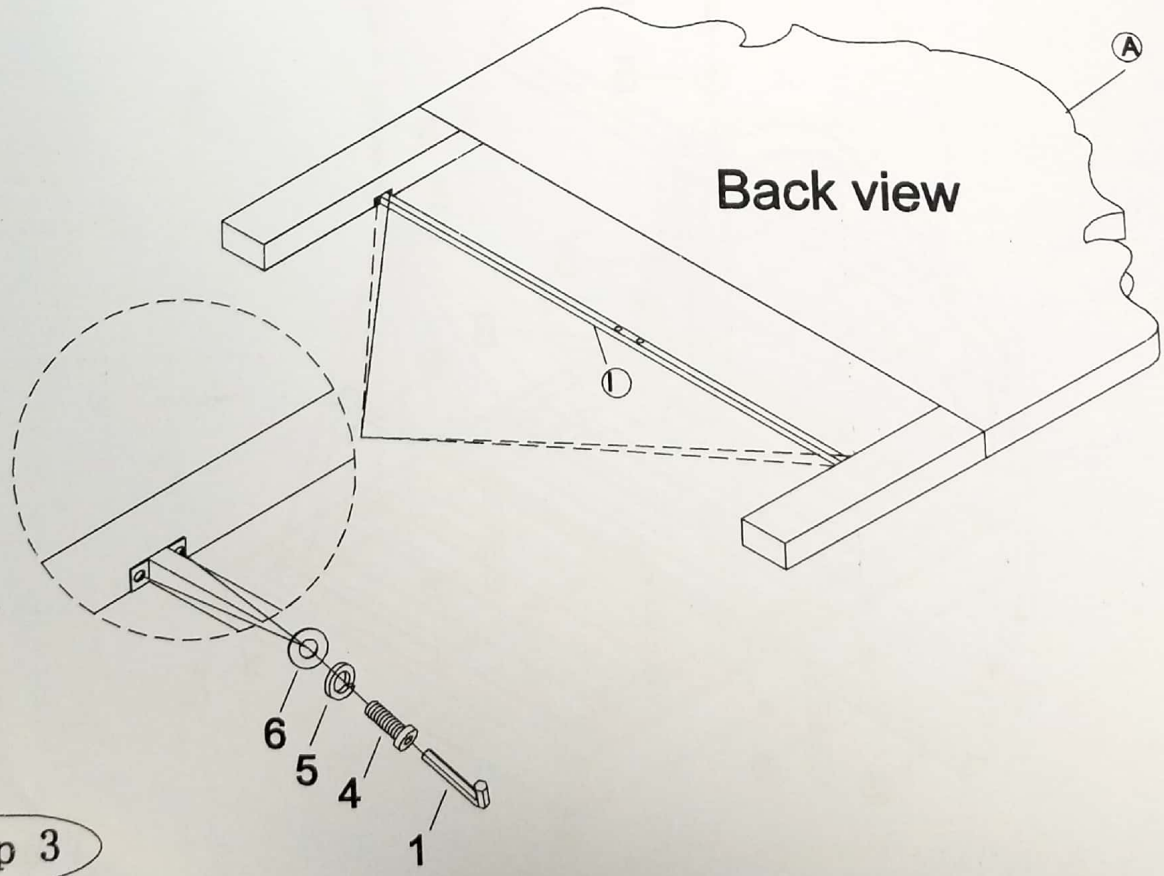

step 3

Scanned by CamScanner

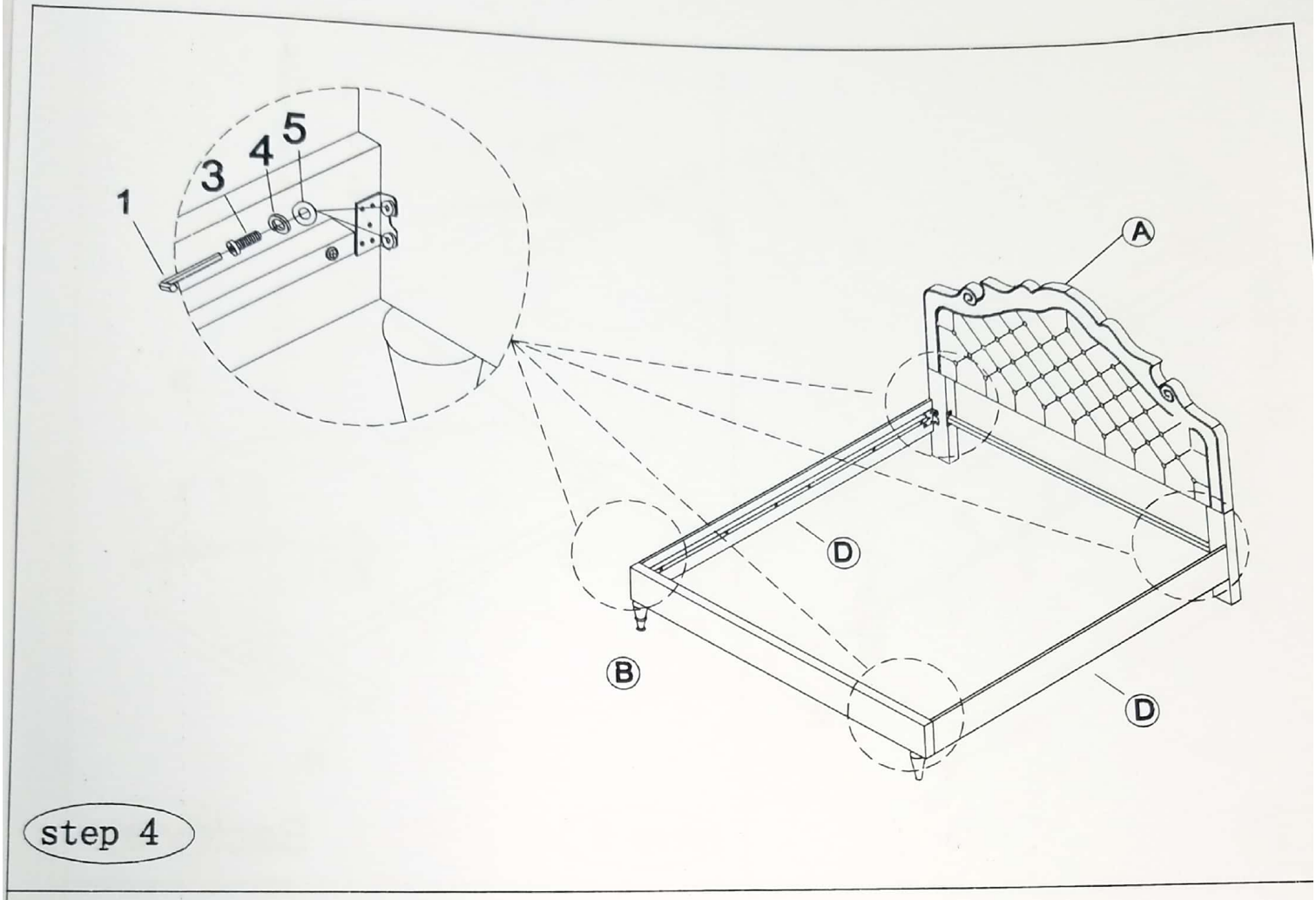

step 4

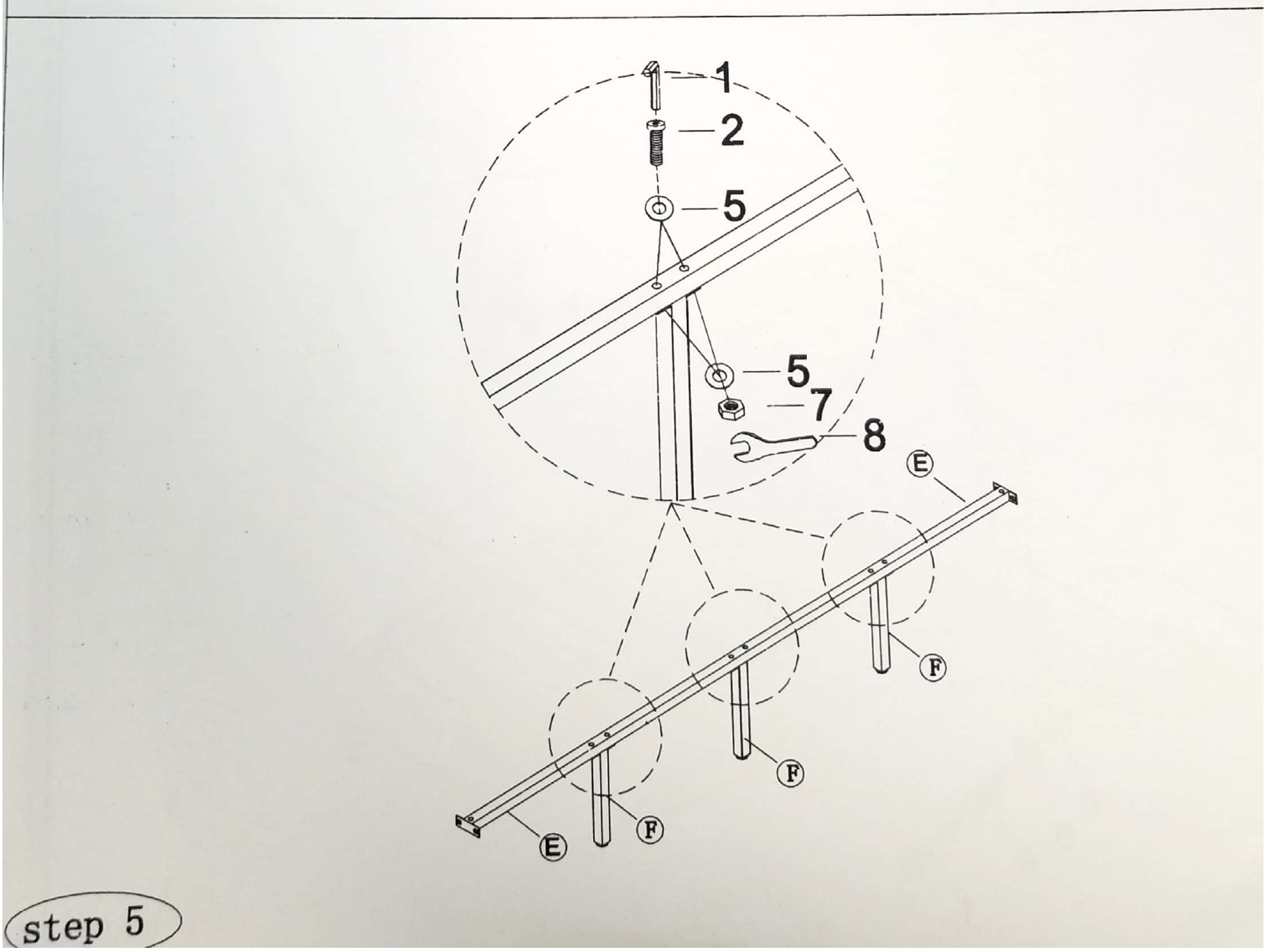

step 5

Scanned by CamScanner

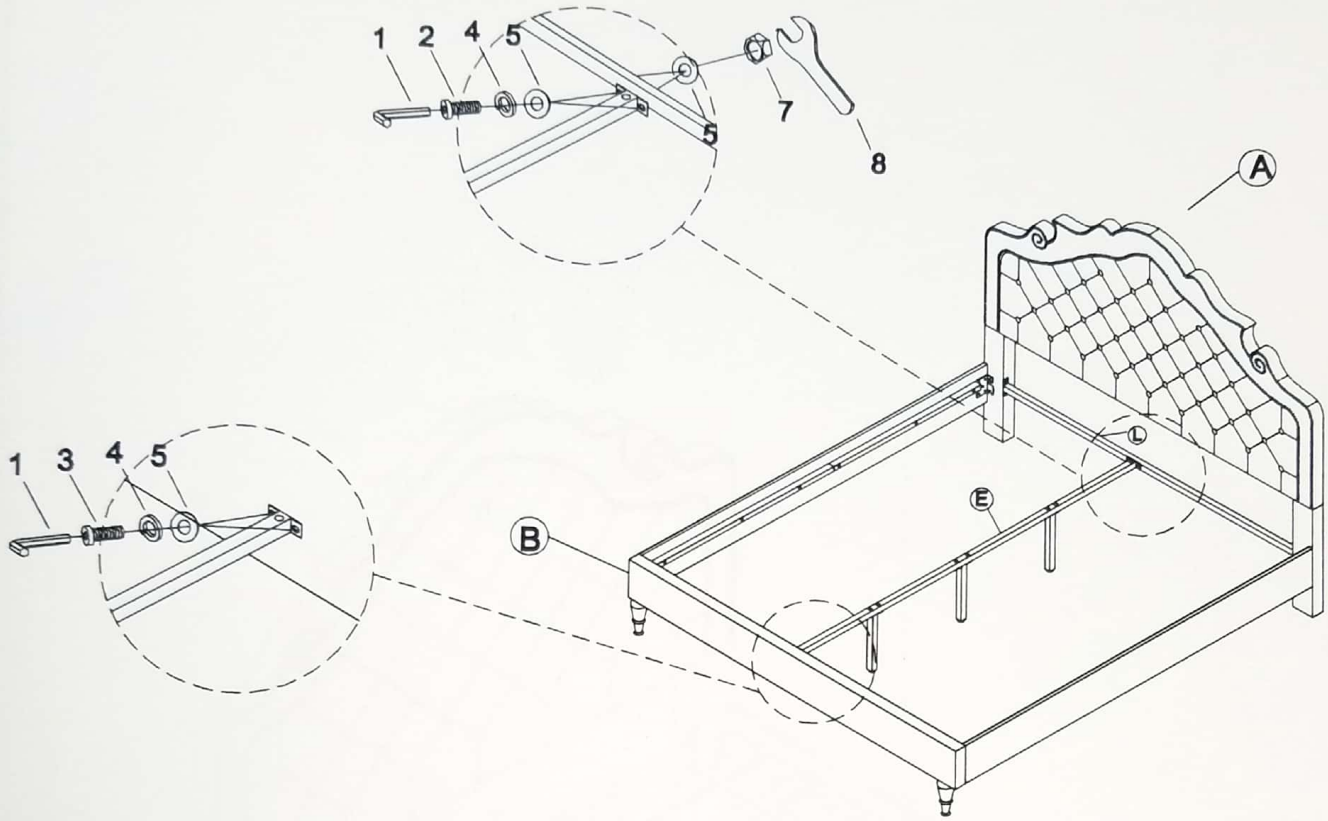

step 6

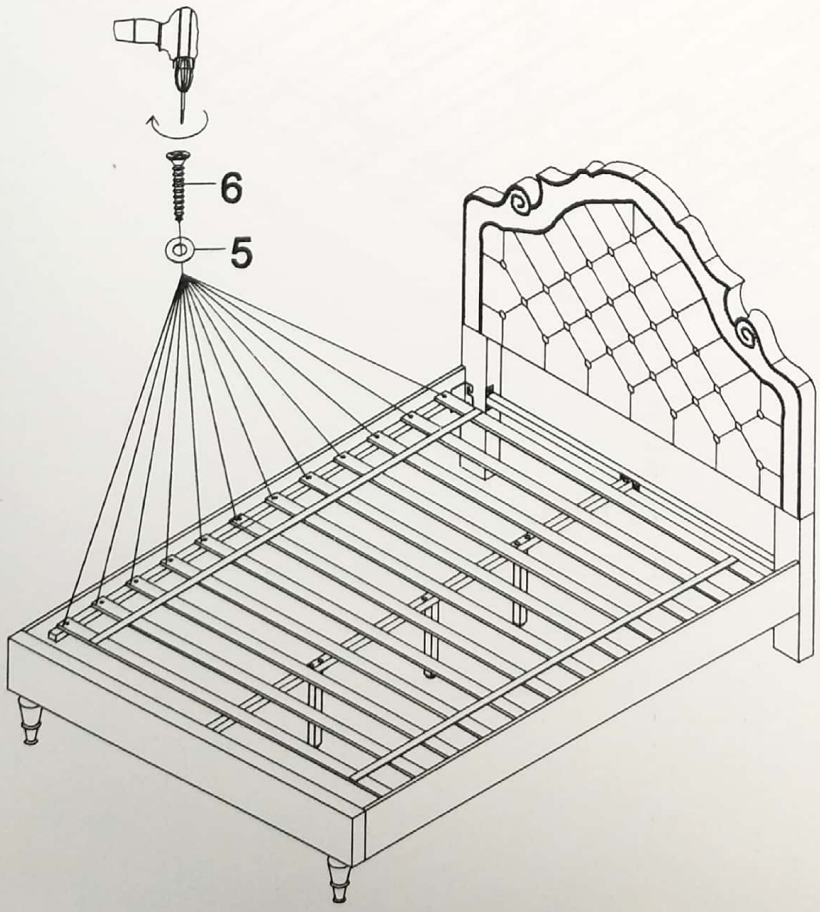

step 7

Scanned by CamScanner