Specification

Each piece comes with one box.

Left Armchair

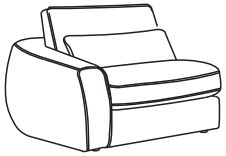

Right Armchair

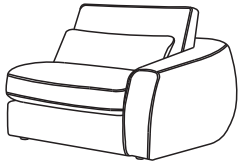

Armless Chair

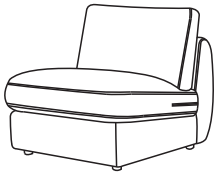

Right Armless Chaise

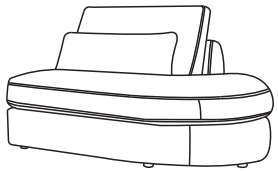

Left Armless Chaise

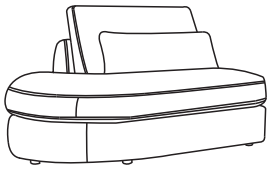

Corner

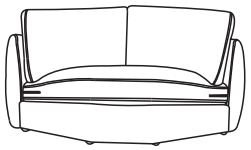

Assembly Manual

Modular Sofa

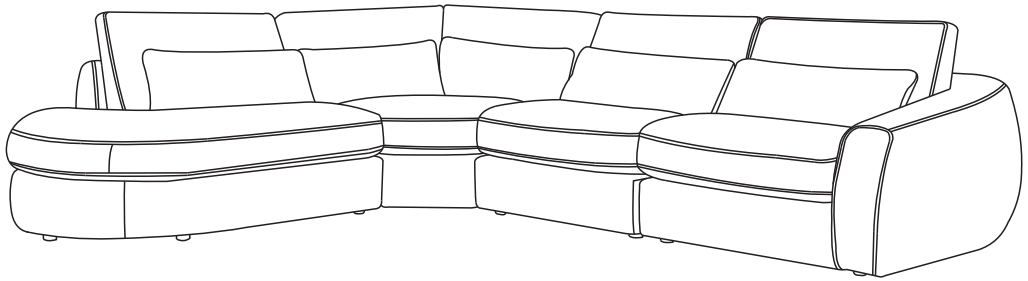

Assembly Manual

Left Armchair

Parts

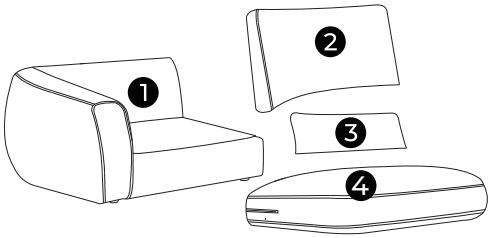

1. Seat Base x 1
2. Back Cushion x 1
3. Lumbar Pillow x 1
4. Seat Cushion x 1

Step 1

Take out the Seat Base, Back Cushion, Seat Cushion and Lumbar Pillow from Box.

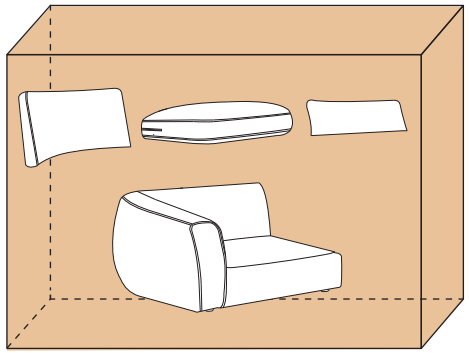

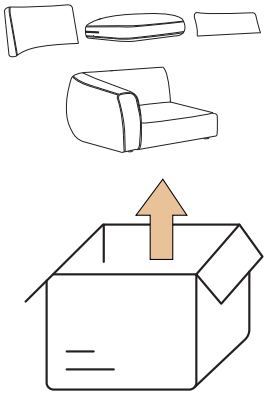

Assembly Manual

Left Armchair

Step 2

Fluff the Back Cushion, Seat Cushion and Lumbar Pillow, put it on the Seat Base to complete the assembly of your Left Armchair.

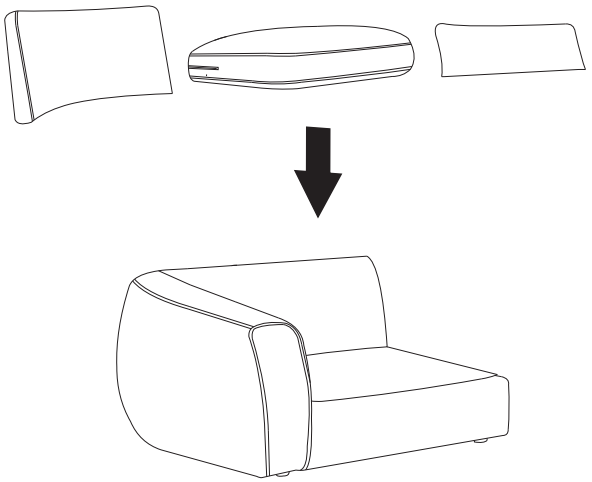

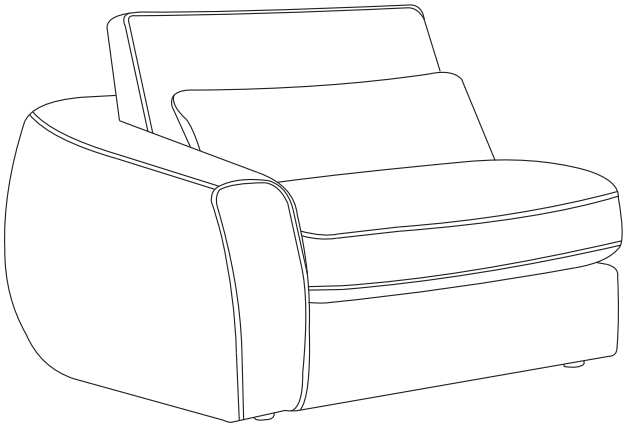

Congratulations!
Left Armchair is ready!

Right Armchair

Parts

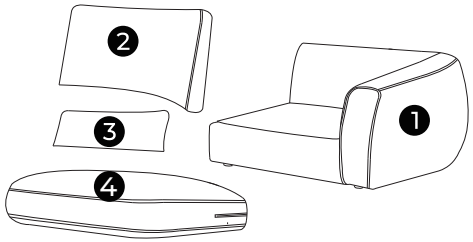

1. Seat Base x 1
2. Back Cushion x 1
3. Lumbar Pillow x 1
4. Seat Cushion x 1

Step 1

Take out the Seat Base, Back Cushion, Seat Cushion and Lumbar Pillow from Box.

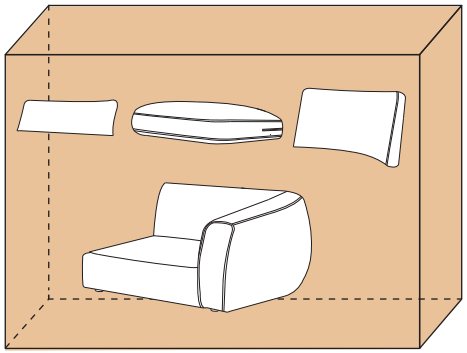

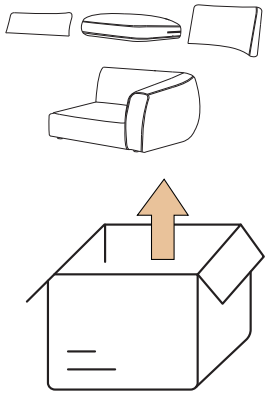

Right Armchair

Step 2

Fluff the Back Cushion, Seat Cushion and Lumbar Pillow, put it on the Seat Base to complete the assembly of your Right Armchair.

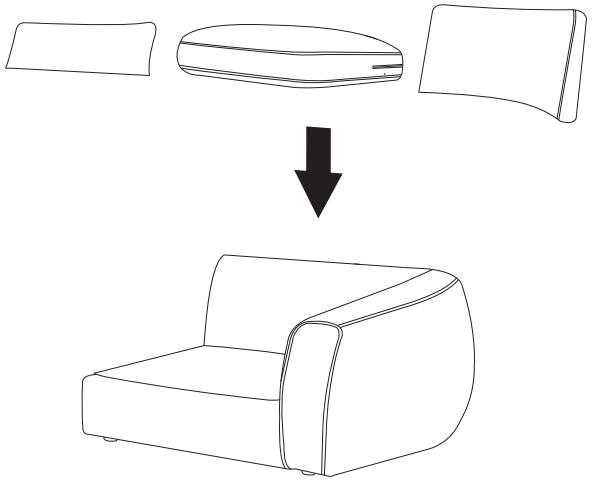

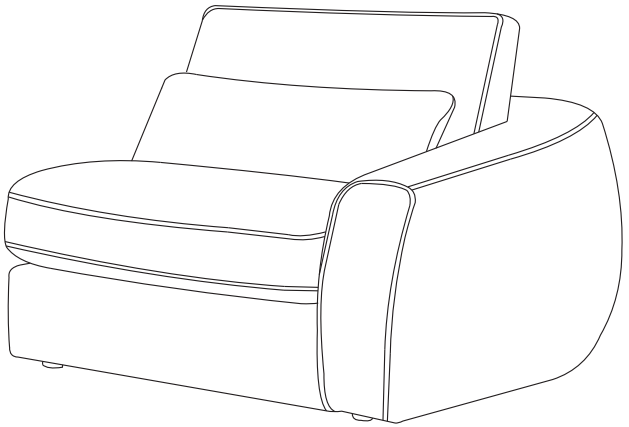

Congratulations!
Right Armchair is ready!

Armless Chair

Parts

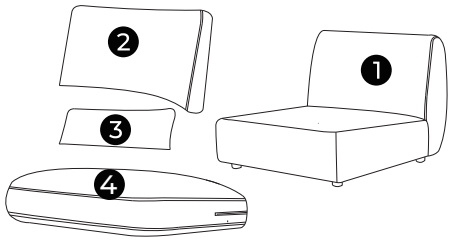

1. Seat Base x 1
2. Back Cushion x 1
3. Lumbar Pillow x 1
4. Seat Cushion x 1

Step 1

Take out the Seat Base, Back Cushion, Seat Cushion and Lumbar Pillow from Box.

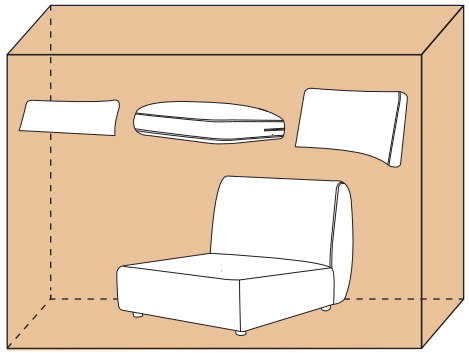

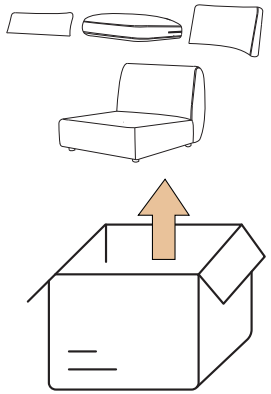

Armless Chair

Step 2

Fluff the Back Cushion, Seat Cushion and Lumbar Pillow, put it on the Seat Base to complete the assembly of your Armless Chair.

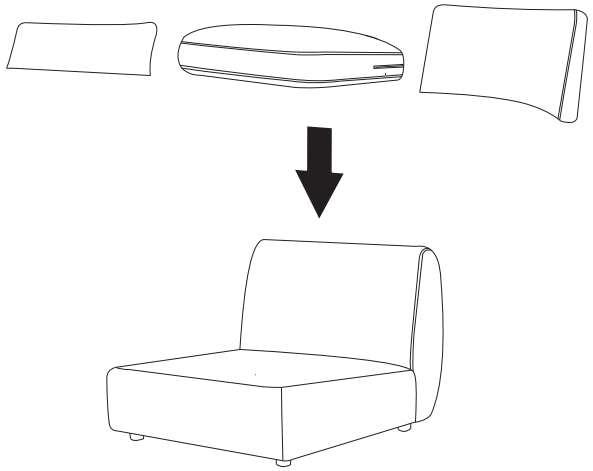

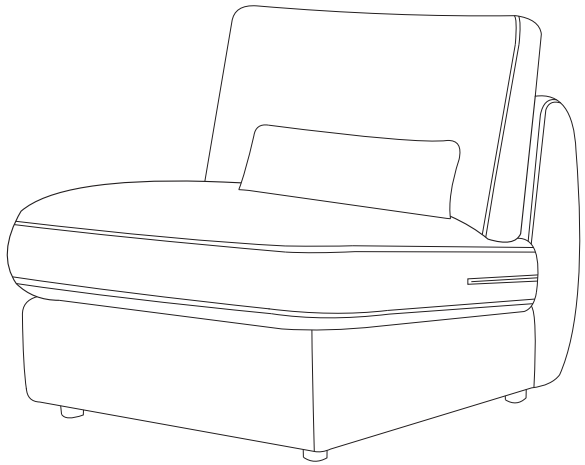

Congratulations!
Armless Chair is ready!

Left Armless Chaise

Parts

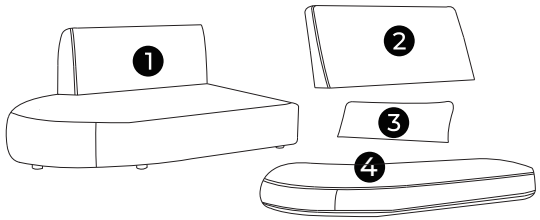

1. Seat Base x 1
2. Back Cushion x 1
3. Lumbar Pillow x 1
4. Seat Cushion x 1

Step 1

Take out the Seat Base, Back Cushion, Seat Cushion and Lumbar Pillow from Box.

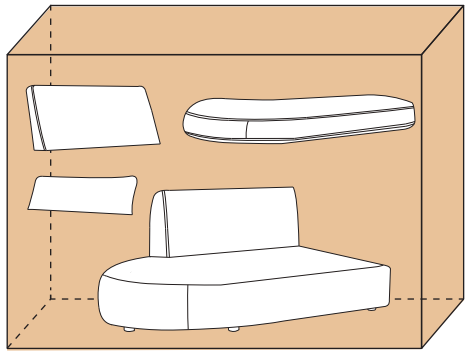

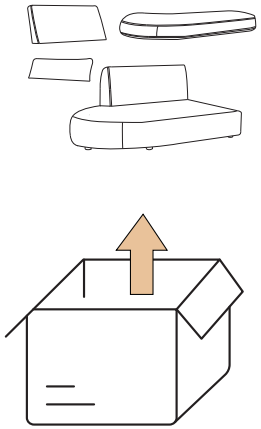

Left Armless Chaise

Step 2

Fluff the Back Cushion, Seat Cushion and Lumbar Pillow, put it on the Seat Base to complete the assembly of your Left Armless Chaise.

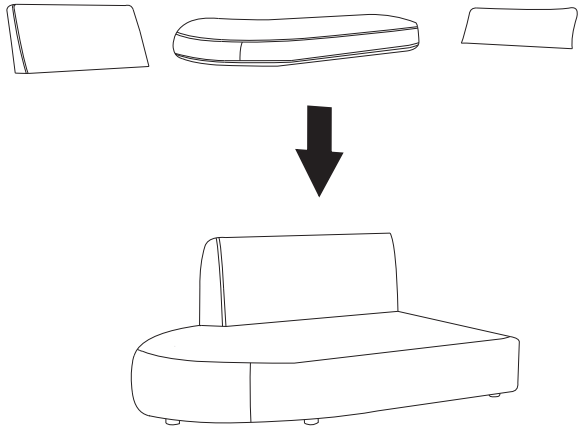

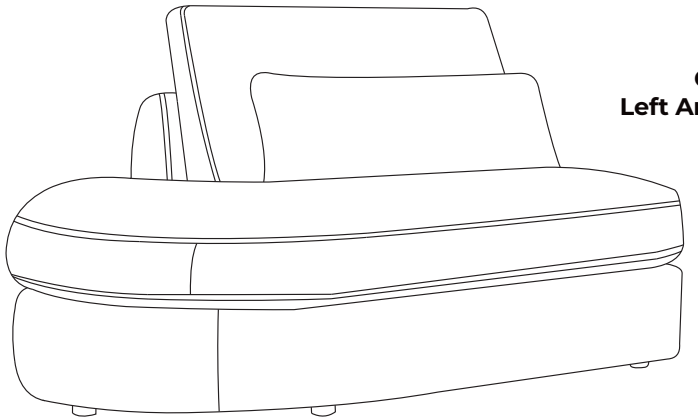

Congratulations!
Left Armless Chaise is ready!

Right Armless Chaise

Parts

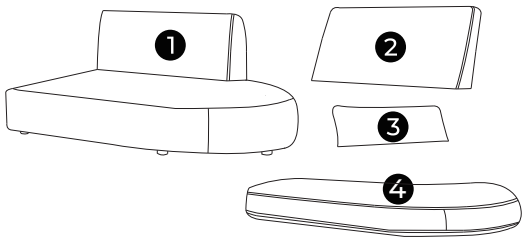

1. Seat Base x 1
2. Back Cushion x 1
3. Lumbar Pillow x 1
4. Seat Cushion x 1

Step 1

Take out the Seat Base, Back Cushion, Seat Cushion and Lumbar Pillow from Box.

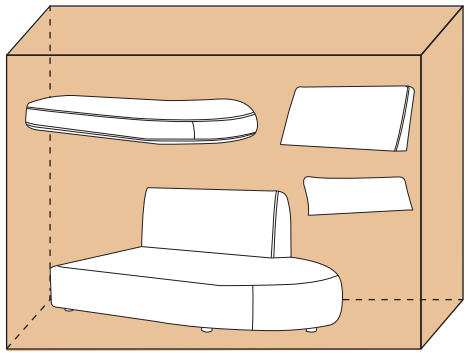

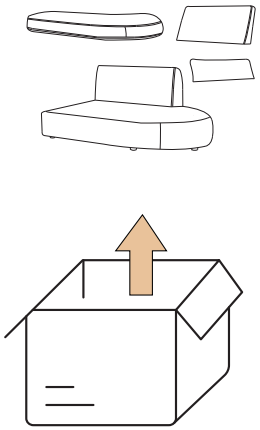

Right Armless Chaise

Step 2

Fluff the Back Cushion, Seat Cushion and Lumbar Pillow, put it on the Seat Base to complete the assembly of your Right Armless Chaise.

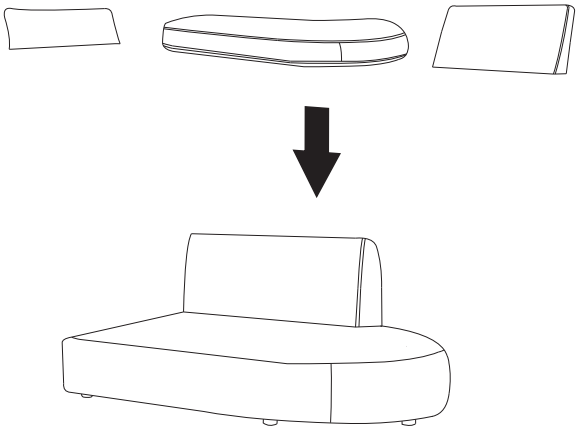

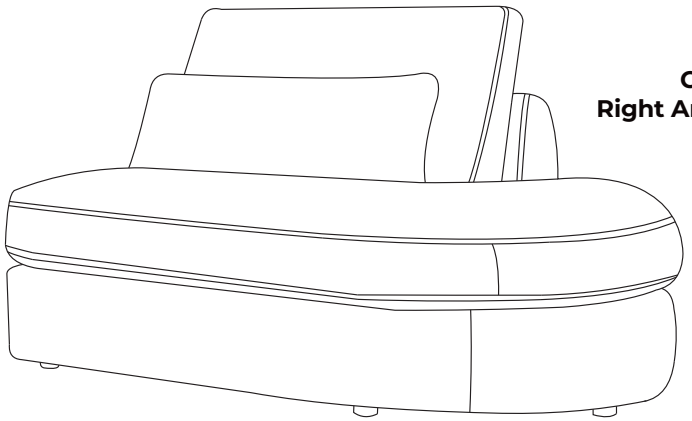

Congratulations!
Right Armless Chaise is ready!

Corner

Parts

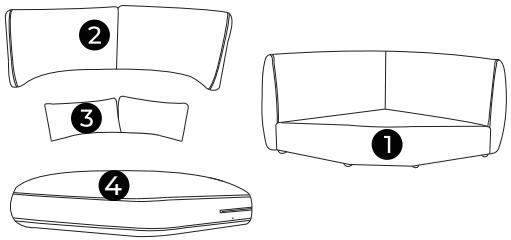

1. Seat Base x 1
2. Back Cushion x 2
3. Lumbar Pillow x 2
4. Seat Cushion x 1

Step 1

Take out the Seat Base, Back Cushion, Seat Cushion and Lumbar Pillow from Box.

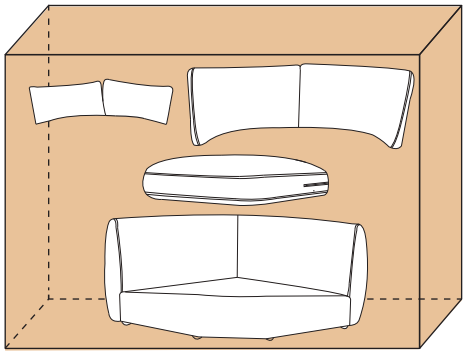

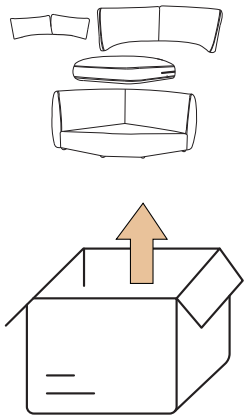

Corner

Step 2

Fluff the Back Cushion, Seat Cushion and Lumbar Pillow, put it on the Seat Base to complete the assembly of your Corner.

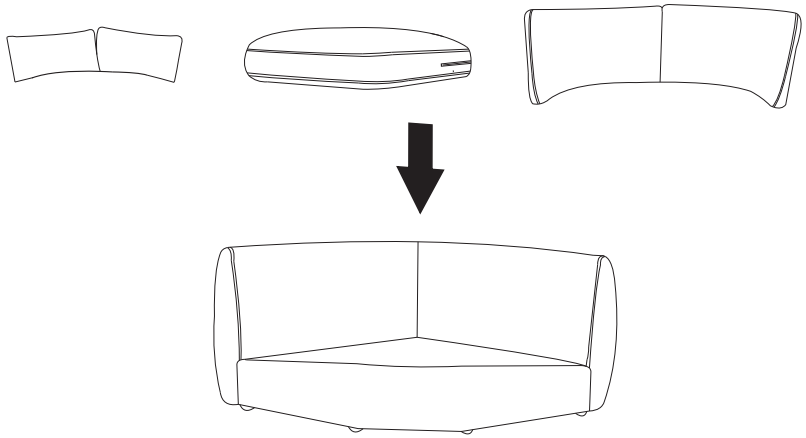

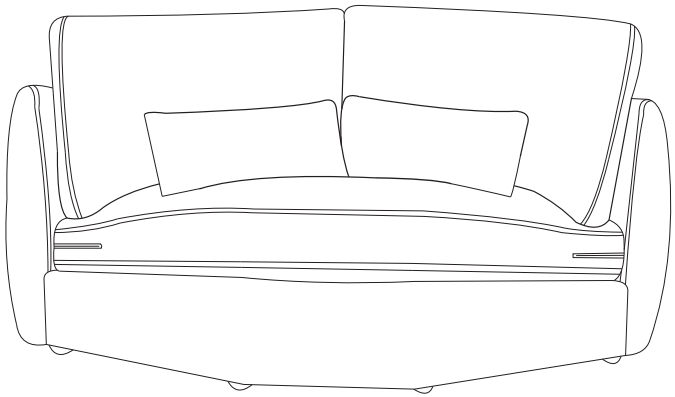

Congratulations!
Corner is ready!

HOW TO CONNECT

Now you have successfully completed the assembly of each module. All modules connect using connectors attached to the underside of each seat frame.

Step 1: Place all assembled modules upright on a level, stable surface.
Step 2: Align the Left Armchair flush with the Armless Chair. Slide its receiving plate fully onto the latch plate of the Armless Chair, then push horizontally toward the center until you hear a distinct click.
Step 3: Repeat Step 2 for the Corner.
Step 4: Repeat Step 2 for the Right Armless Chaise.
Step 5: Verify that both joints are fully engaged: there should be no visible gaps, and no movement when gently pressed.

Note: If the connector does not engage with an audible click, gently lift the module, recheck alignment, and try again. Never force the connection.

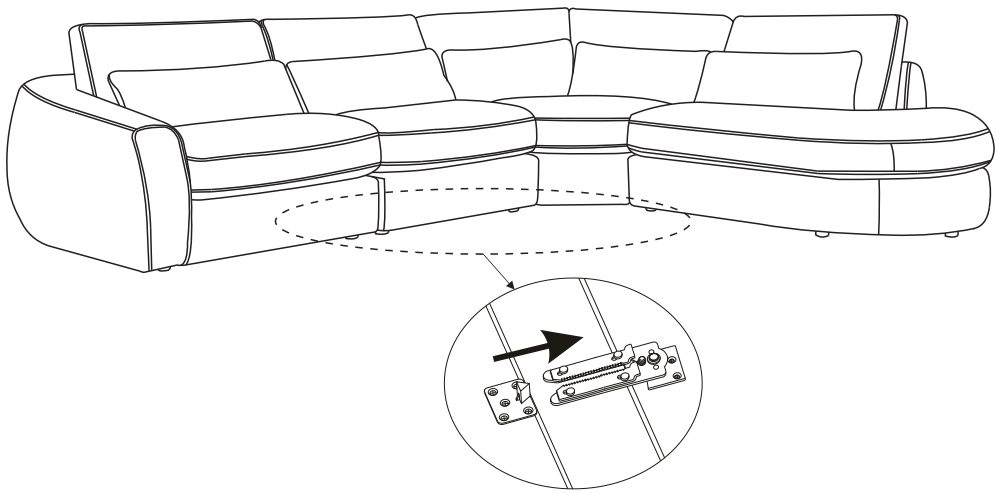

Care Instruction

For non-removable areas:

Blot and spot clean immediately with a clean, absorbent cloth and a water-free stain remover (Cleaning Code: S).

For cushion covers:

- Dry clean only.
- Do not tumble dry.
- Do not bleach.
- Iron at low temperature (230°F / 110°C or below).