Thank you for your purchase!

We hope you enjoy this new addition to your home for many years to come.

Our commitment to providing quality products does not simply end when you purchase our product. We fully stand behind our products from start to finish. Our customer service department is available Monday – Friday 8:30 AM – 5:30 PM Pacific Time and can help with assembly questions as well as, if necessary, replacing damaged or missing parts. To help expedite our service, please have these assembly instructions readily available, along with your order receipt.

## CHECK BEFORE STARTING

- ☐ **Are you missing anything?** Double-check all parts, hardware and accessories listed are all accounted for.
- ☐ **Should we send any replacements?** Are there any irregularities or flaws in the parts? We can send replacements!
- ☐ **Check out our Quick Tips!** We recommend reviewing the pre-assembly handouts. Even experts need a refresher now and then!
- ☐ **Prep Time!** Please review the assembly instructions and all diagrams prior to assembling.

## PRE ASSEMBLY INTRODUCTION

We understand building ready-to-assemble furniture can be a challenging experience for some. To help avoid confusion, we have provided some helpful tips that may speed up the process.

**Teamwork**

ALWAYS have at least two people to help with transporting and assembling the product to avoid potential injury and/or damage.

**Suitable Location**

Assembling near the area of the intended location is highly recommended.

**Sufficient Space**

Make sure you have enough space to move around during the assembly.

**Avoid Scratches**

Use cardboard, blankets or a carpeted area while assembling furniture to prevent to prevent scratches and damages.

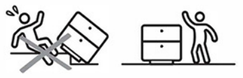

**Flat Surface**

Make sure the furniture rests on a flat and level surface with each leg evenly touching the floor.

## ASSEMBLY AND CARE ADVICE

**FAILURE TO FOLLOW THE GUIDELINES BELOW MAY RESULT IN INJURY AND/OR PROPERTY DAMAGE.**

Position each part correctly and insert screws or bolts into their respective holes.

Turn clockwise to tighten and only tighten when step is completed or when instructed to do so.

Use the appropriate hand tools or power tools for assembly. Select steps, such as tightening screws and/or bolts, may require hand tools to avoid causing damage during assembly.

Save the instructions and store any supplied tools for later maintenance.

After two weeks, check and tighten any loose hardware and repeat again every six months thereafter.

**IT IS THE USER'S RESPONSIBILITY TO MAINTAIN THE FURNITURE. THE HARDWARE MAY LOOSEN OVER TIME AND MAY CAUSE THE FURNITURE TO BE WOBBLY AND UNABLE TO SUPPORT ITS INTENDED WEIGHT CAPACITY. THIS MAY LEAD TO COLLAPSE AND MAY CAUSE SERIOUS INJURY.**

## CHEST

### PARTS

1

CHEST
1pc

2

BUNFEET
4pcs

### HARDWARE

A

ANTI TIP KIT
1pc

## ASSEMBLY INSTRUCTIONS

1 Part #1 x 1pc
Part #2 x 4pcs

Take the leg box out of the drawer

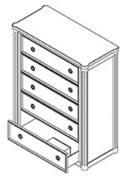

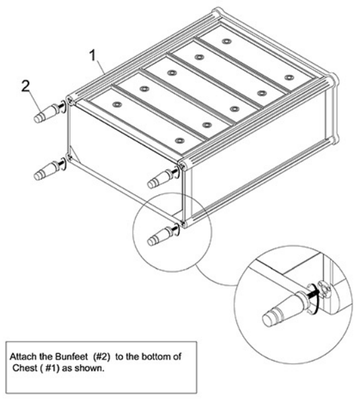


Attach the Bunfeet (#2) to the bottom of Chest ( #1) as shown.

## ASSEMBLY INSTRUCTIONS

2 Hardware #A x 1pc

Use anti-tip kit to secure Chest to the wall.

**ASSEMBLY COMPLETED**

Please ensure the Furniture rests on an even and flat surface. If the product wobbles or feels loose, double-check all bolts and/or screws are properly tightened and secured.

**Keep this handy!**
Please retain this instruction manual and any order-related information for future reference.

**Lift, don't drag!**
To avoid damage to product please always LIFT the product when transporting of adjusting the placement

## ASSEMBLY INSTRUCTIONS

**Wall Mounting and Fixing**

**EXPANSION WALL ANCHOR**

Our provided expansion wall anchors are only suitable for masonry walls, such as drywall, plaster or concrete, and are best for holding lightweight items or for anti-tip prevention. If you are unsure of the correct wall anchor to use with the product, please request professional guidance. liability for product damage or failure due to using the incorrect anchors will fall on the installer.

**CHECK BEFORE PROCEEDING**

Prior to drilling or hammering, please check for wires or pipes. We recommend using a stud finder to locate a stud, which will offer more appropriate resistance and hold more weight.

### QUICK TIPS

1.If unsure of the proper size, always choose a larger screw and wall anchor.

2. Match the drill bit to the wall anchor and hole size.

3. Only drill horizontally. Do not force the drill or enlarge the hole for the wall anchor.

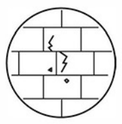

4. Take extra care when drilling into high walls or ceramic tiles. Wall anchors should be a tight fit for the hole. Never use wall anchors in ceilings.

**MAINTENANCE**

Yearly Check

We recommend a yearly check to see if the wall anchor or screw has loosened. If so, please remove the existing wall anchor and screw, and use a new anchor.