Wall Mounted Basketball Hoop

Product ID. 7LNOG

Scan for Support
support@garvee.com

Distributed by
GARVEE.com

V260428T30C

ⓘ NOTICE

●Firmly secure all screws before use.

●If any parts are missing, broken, damaged, or worn, stop using this item until repairs are made or factory replacement parts are installed.

●Do not use this item in a way inconsistent with the manufacturer's instructions.

⚠ SAFETY INSTRUCTIONS

1.Due to the uncertainty of the weather (sudden gusts of wind, etc.), for extra safe, please put a couple of sandbags on the base. (it is recommended that you do this, even if the base has already been filled with water or sand.) That will hold the basket more steady and safe.

2.Do not place hard things on the base. (such as sharp stones, irregular bricks, etc.)

3.Do not step on the base, otherwise it will be damaged.

4.Do not use system during windy or severe weather. System may tip over. Place system in an area protected from the wind or in an area away from property.

5.Please ensure to check the overall weight of the base (if the base is not sufficiently heavy, the basketball hoop may topple over) and verify the tightness of the screws prior to use in order to prevent any damage to the product or harm to the users.

6.More than two adults are recommended for installation, and children are prohibited from installing.

7.Please check the base for any leaks before using it, as even a small amount of water leakage can lead to the product tipping over.

8.The product is designed for leisure and entertainment purposes, not for intense competition. It is strictly prohibited to engage in aggressive dunking and hanging on the product.

9.After the installation is complete, it is necessary to immediately fill the base with water or sand to ensure stability and prevent it from toppling over. Additionally, it is crucial to place the base on a level and flat surface before use to prevent tippling or damage caused by sharp objects.

⚠ WARNING

1.Climbing or hanging on the hoop, backboard bracket, and net is strictly prohibited.

2.Using products with potential safety hazards is prohibited. If any parts require repair or replacement, please promptly contact the after-sales service.

3.To exercise caution when moving on uneven ground, as it may damage the product's side material. Please be cautious.

4.To prevent damage to the base caused by freezing temperatures below 0 degrees Celsius, the water in the base must be drained or replaced with sand.

5.If the product is used outdoors for an extended period, please ensure that the top of the main pole and the lifting pole are covered with plastic caps to protect against rainwater, which could affect the product's lifespan.

6.It is advised not to wear watches, necklaces, earrings, or other jewelry while using the product to avoid entanglement or loss during exercise.

7.When adjusting the height, keep your fingers away from the moving parts.

8.Children are prohibited from moving the product or adjusting its height.

TOOL REQUIRED



#13-14 Wrench*2
(PROVIDED)



#17-19 Wrench*2
(PROVIDED)

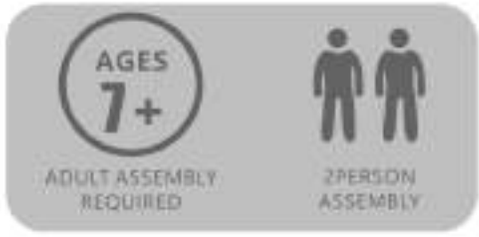

HARDWARE

A1、A2、A3

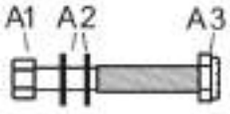

M10 x 50MM

Bolt 8pcs

B1、B2、B3

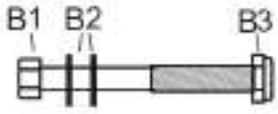

M10 x 70MM

Bolt 5pcs

C1、C2



M8 x 20MM

Bolt 4pcs

D1、D2、D3

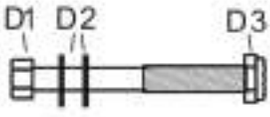

M8 x 80MM

Bolt 1pc

I



Bolt 6pcs

P



Net 1pc

AA



Rim 1pc

CC

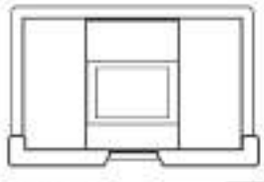

Backboard 1pc

PARTS

F1

1PC

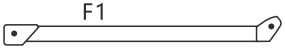

F2

1PC

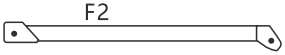

U1

1PC

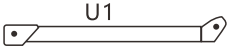

U2

1PC

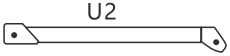

H

1PC

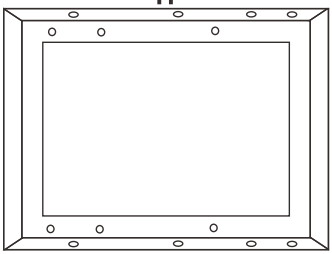

1PC

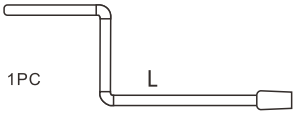

L

J

1PC



K

1PC

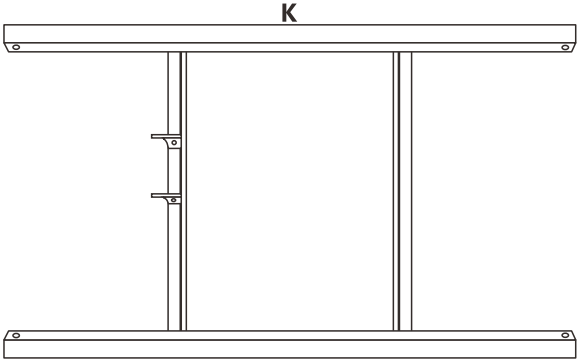

M

1PC

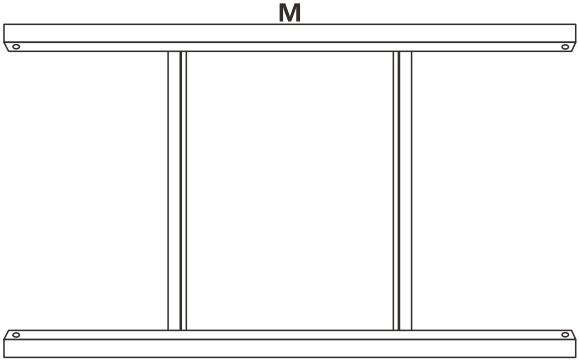

PRODUCT ASSEMBLY

STEP 1

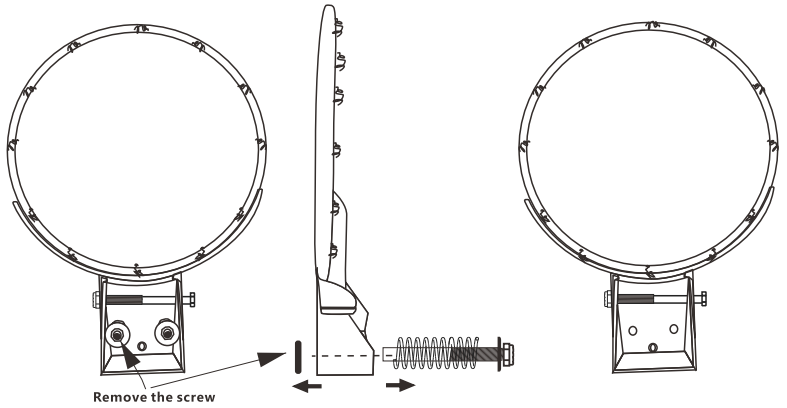

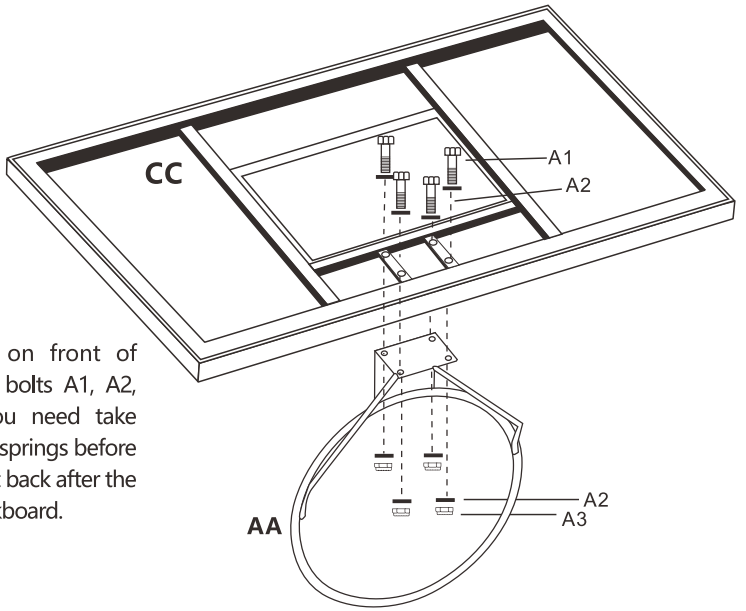

Fix the rim AA on front of backboard CC by bolts A1, A2, A3 as shown. You need take apart the 2pcs rim springs before this step, and put it back after the rim is fixed on backboard.

STEP2

Fix the lower bracket M and upper bracket K on the back of backboard CC as shown. Please make sure the direction of bracket M and upper bracket K should be assembled same as below picture, otherwise you couldn't continue next steps.

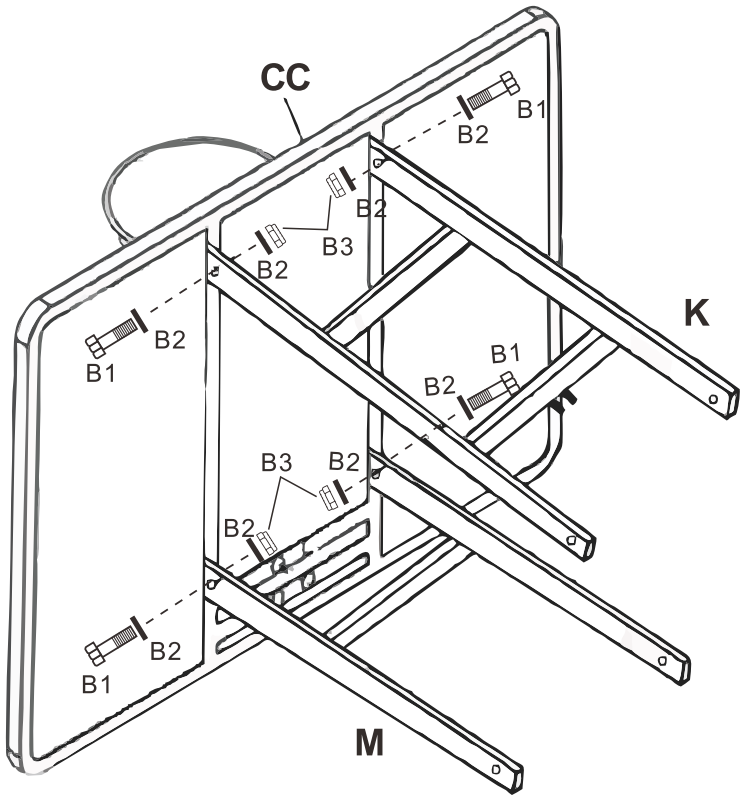

STEP3

Fix the lower bracket M and upper bracket K on the back of backboard CC as shown. Please make sure the direction of bracket M and upper bracket K should be assembled same as below picture, otherwise you couldn't continue next steps.

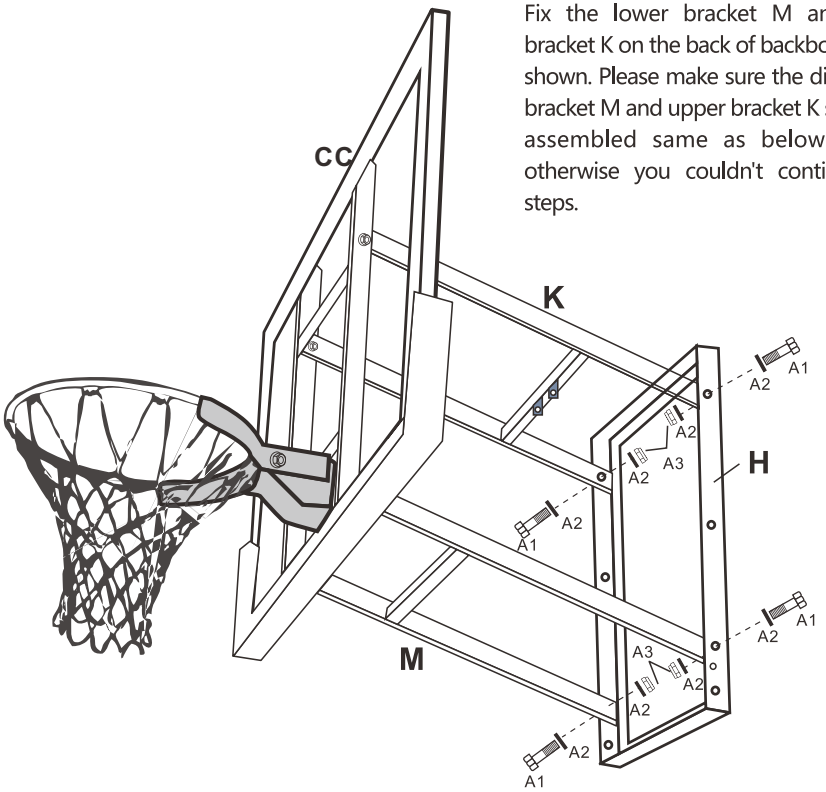

STEP4

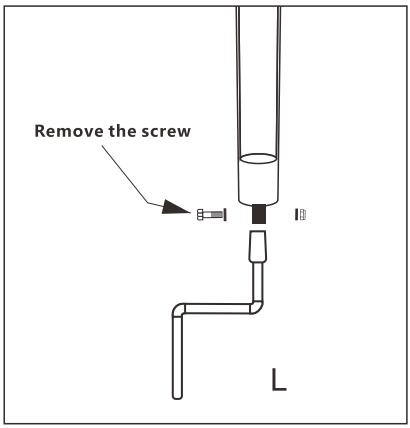

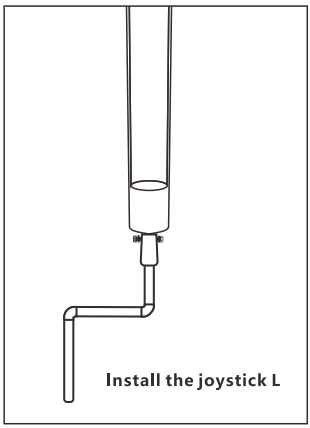

STEP5

a. Fix the top end of adjustment mechanism J on upper bracket K by bolt B1, B2, B3 as shown.
b. Fix the 4pcs braces F1 F2, U1, U2 on the bottom of adjustment mechanism J by bolts D1, D2,D3,D4 as shown.

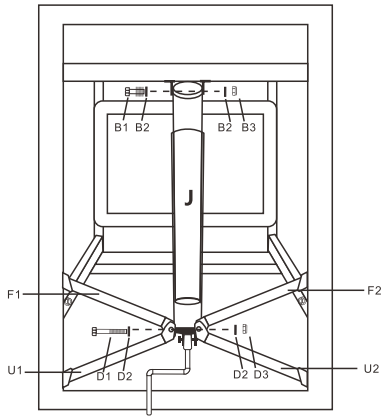

STEP6

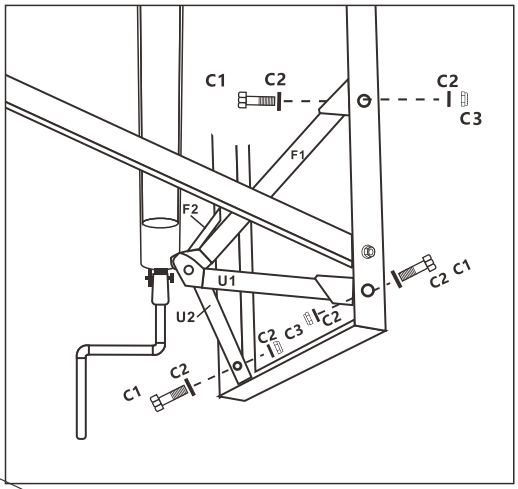

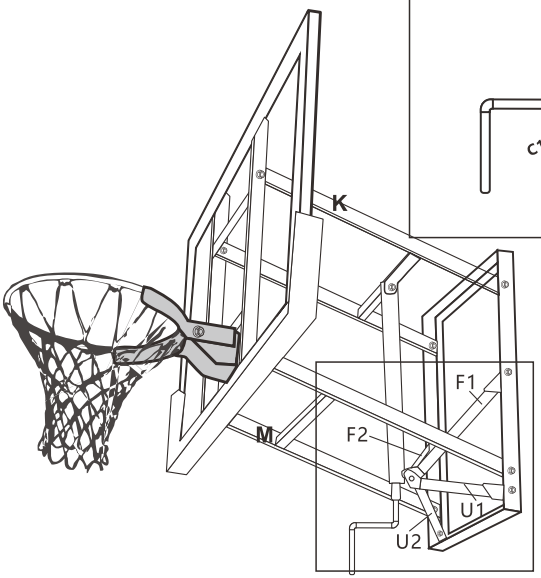

a. Install the crank handle L at the axle bottom of adjustment mechanism J as shown.
b. Fix the other ends of the 4pcs braces F1,F2,U1,U2 on mounting frame H refer to following pictures and photos.

STEP7

Mark 6 position on the wall that you are going to install the whole backboard system according to the holes on mounting bracket H. Then drill holes for the 6pcs plug bolts I. Fix the whole assembled backboard on the wall frrmly.

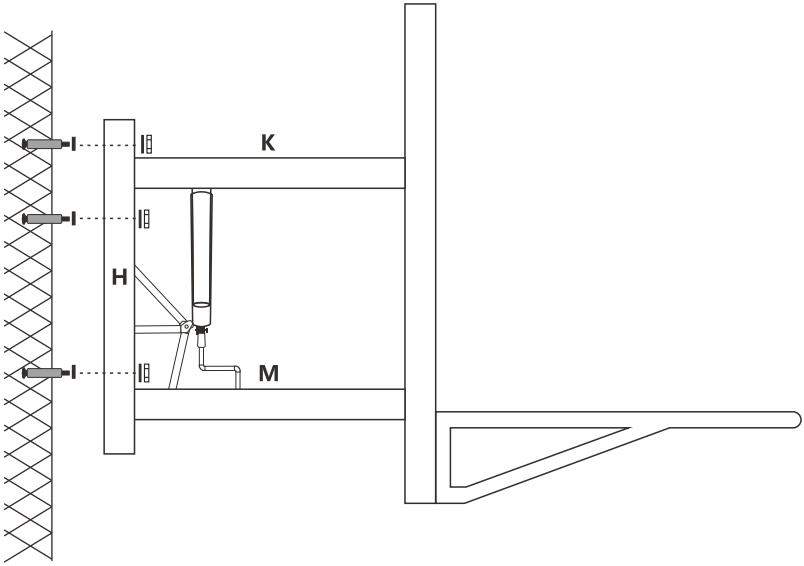

STEP8

Assemble net P on rim AA as shown.

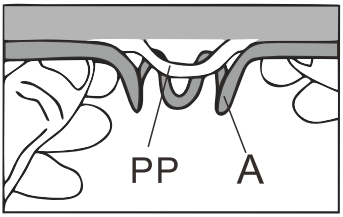

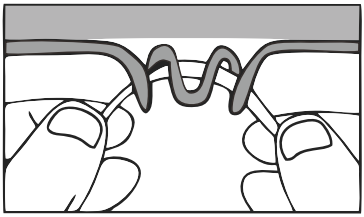

GARVEE

support@garvee.com