Assembly Instruction

①*1pc		A*10+1EXT	M6*30MM
②*1pc		G*1	M6
③*1pc			
④*1pc	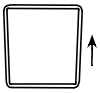		

STEP 1

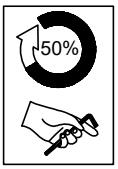

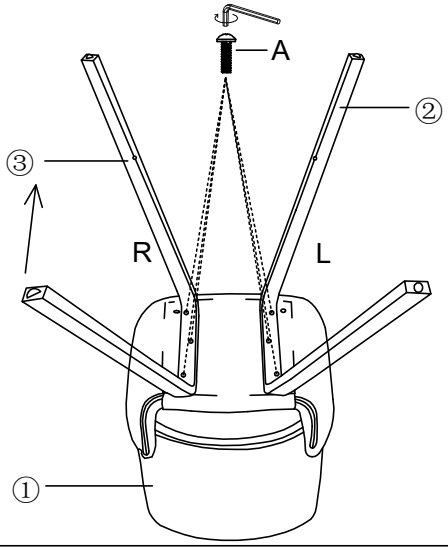

STEP 2

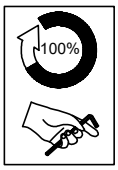

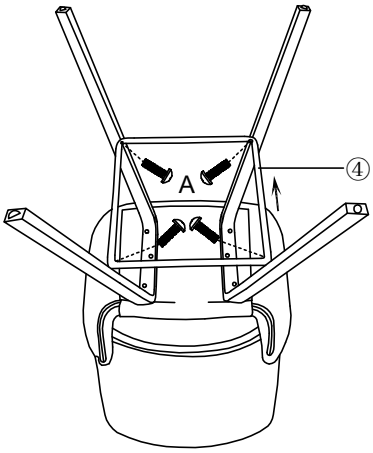

Fasten All screws indicate on Step 1& Step2.

STEP 3

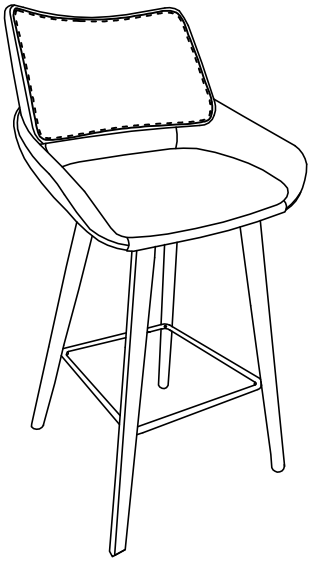

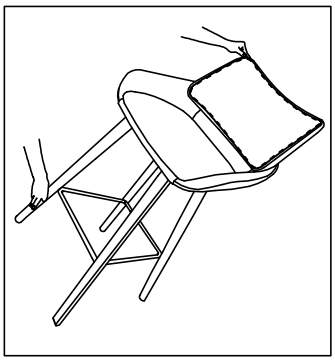

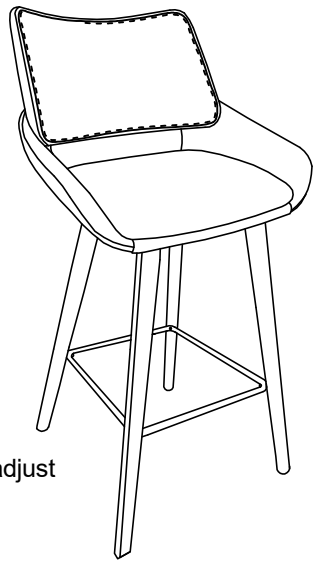

NOTE:

If the legs are uneven, please adjust it by pressing the legs.