Installation instructions

Installation of hanging plate

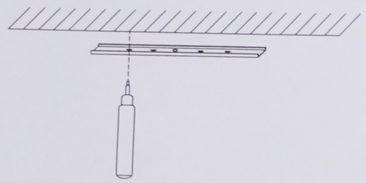

Step 1: draw a mark on the ceiling with the hanging board as a reference

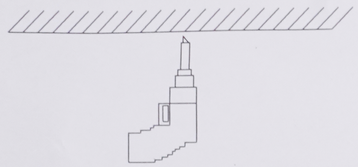

Step 2: drill the hanging plate hole on the ceiling with an electric drill

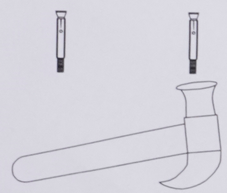

Step 3: tap the expansion screw into the drilled hole

Step 4: fix the hanging plate on the expansion screw and tighten it with nuts

Main view

installation diagram

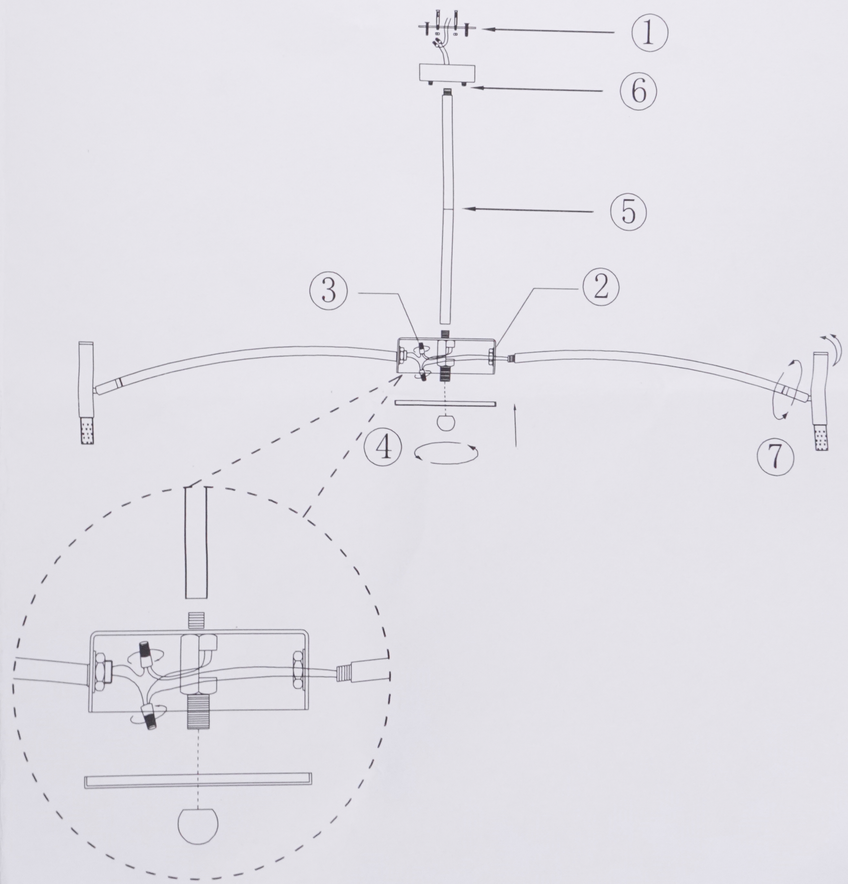

Please complete the assembly in sequence:

① ② ③ ④ ⑤ ⑥ ⑦