80119 Product Installation Instructions

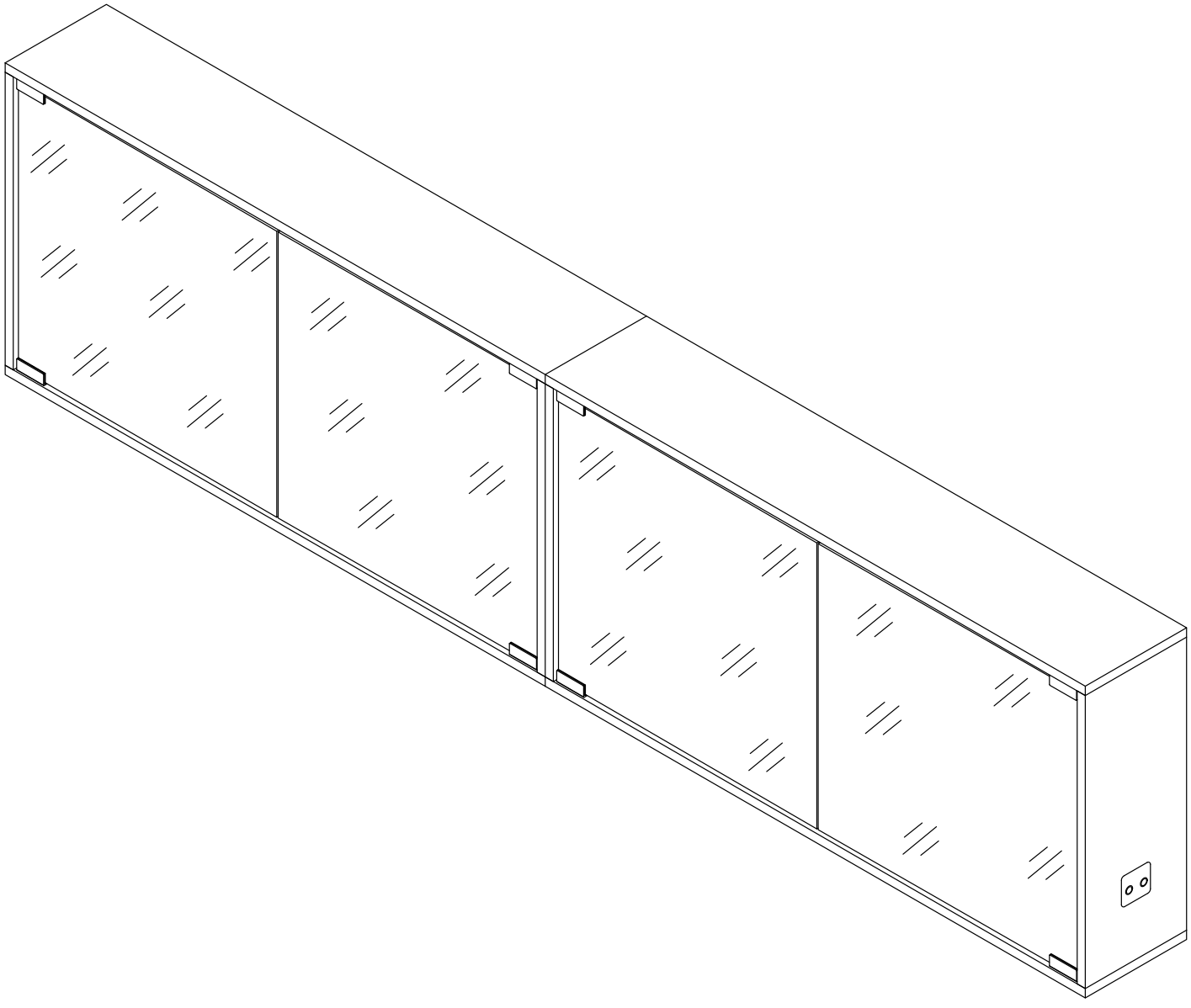

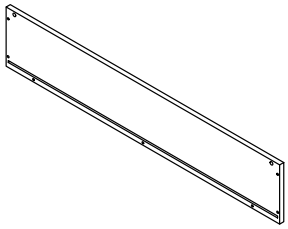

Ax2

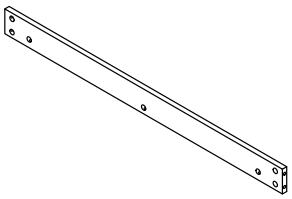

Bx2

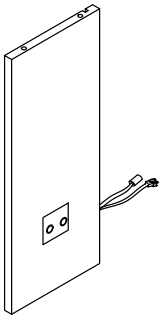

Cx1

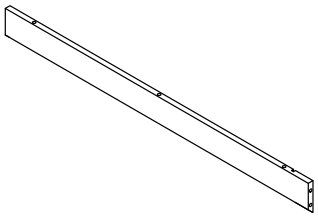

Dx1

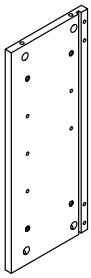

Ex1

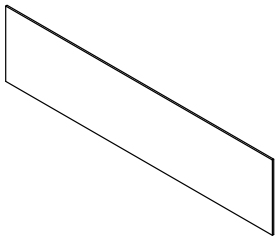

Fx4

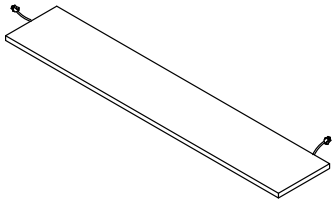

Gx1

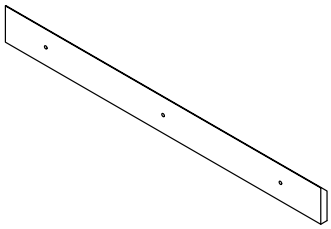

Hx2

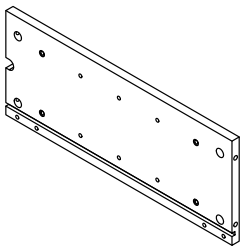

Ix1

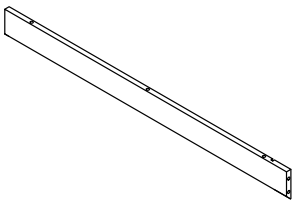

Jx1

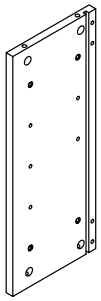

Kx1

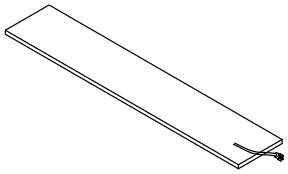

Lx1

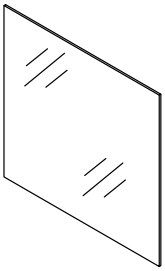

Mx4

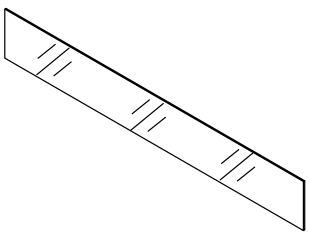

Nx2

1	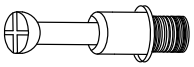	Two in one screw (6x28mm)	44pcs +5pcs
2		Two in one nut (10x12mm)	44pcs +5pcs
3	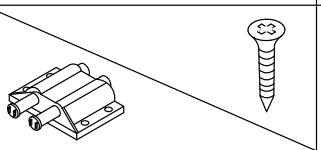	Rebound device & Screw (3x16mm)	2pcs / 8pcs +1pcs
	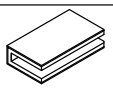	Iron sheet	4pcs
	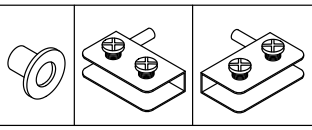	Hinge	8pcs 4pcs 4pcs
4	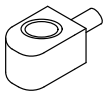	Laminate support nail	8pcs +2pcs
5	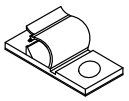	Wire clamp	2pcs +1pcs
6	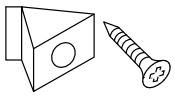	Fixing clip & screw (3x16mm)	8pcs +2pcs
7		Sticker (50x10mm)	8pcs +2pcs
8	Wall-mounted hardware 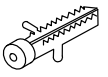 x4  x4 (4x45mm)  x8  x4 (3.5x14mm)  x4		
9	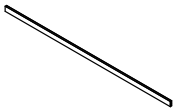	Backboard card strip(772mm)	2pcs
10		screw (4x20mm)	4pcs +2pcs
	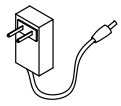	AC/DC Adapter (12V⎓2.0A)	1pcs

Double-head screwdriver, use as required

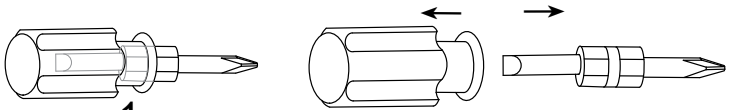

1pcs

Product structure decomposition

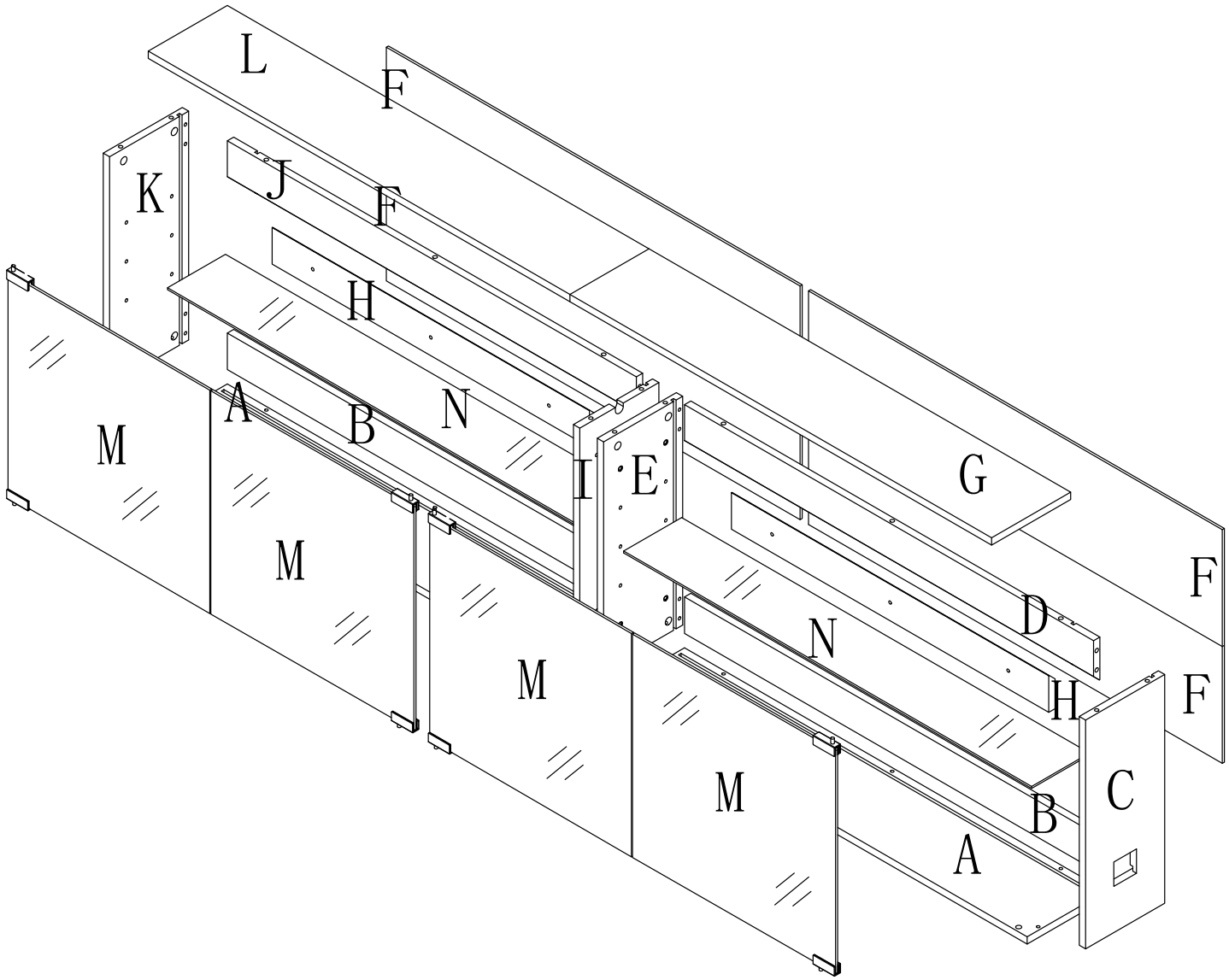

Use parts 1 and 2

Step1

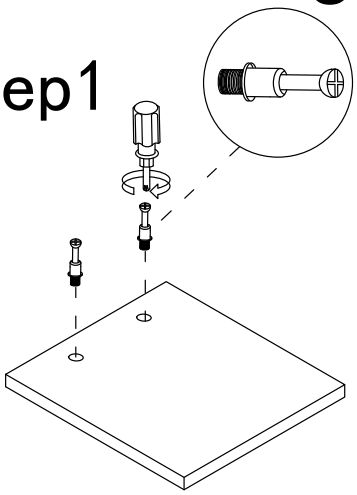

Step2

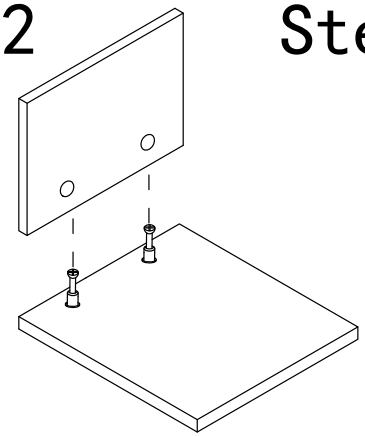

Step3

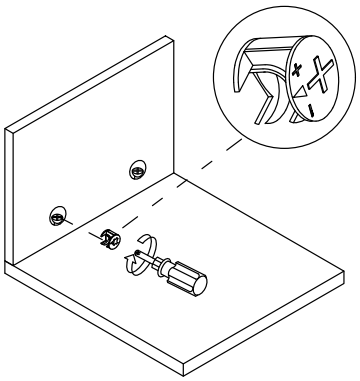

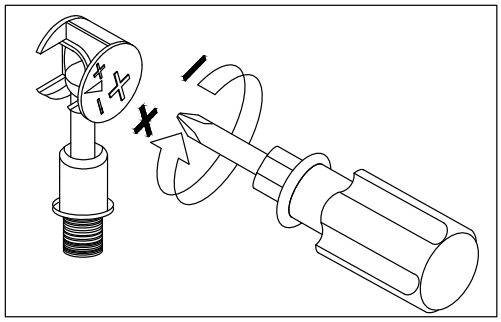

Use a screwdriver to lock in the direction of the "+" sign

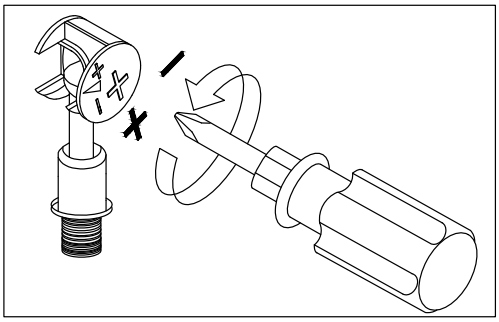

Disassemble along the direction of "-" sign

Step 1

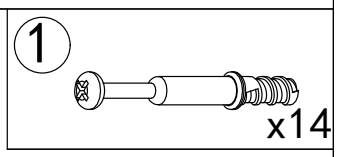

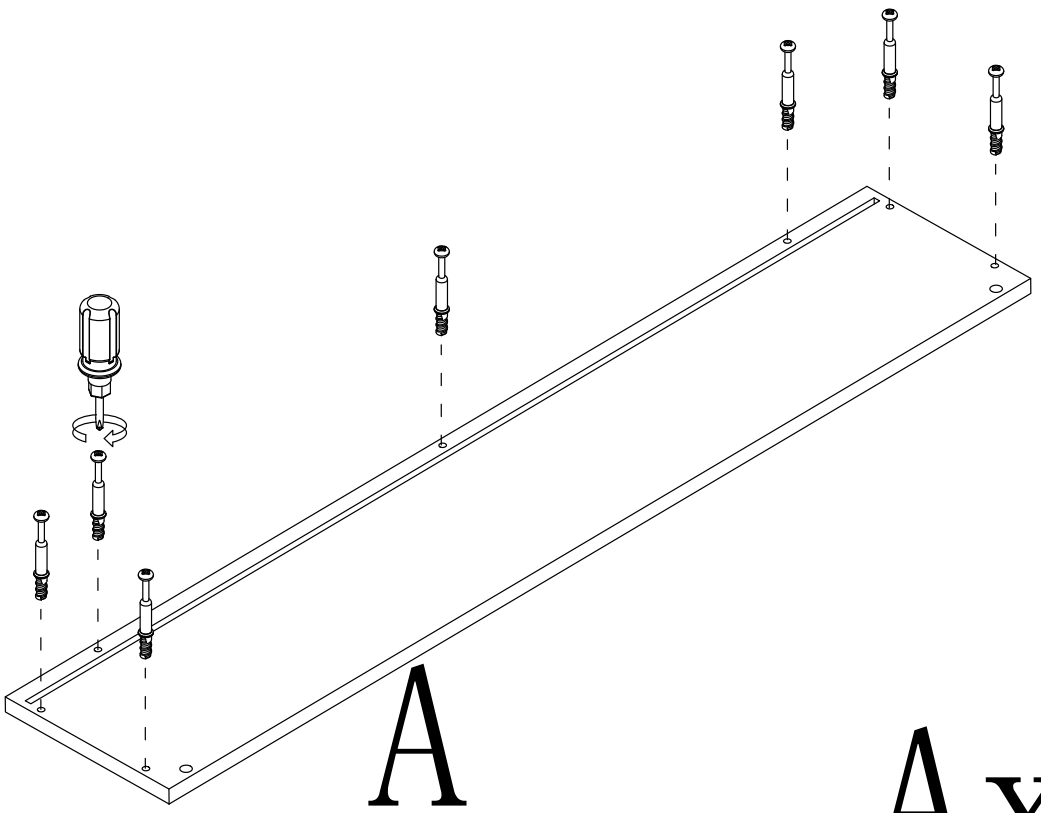

A

Ax2

Step 2

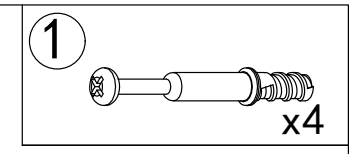

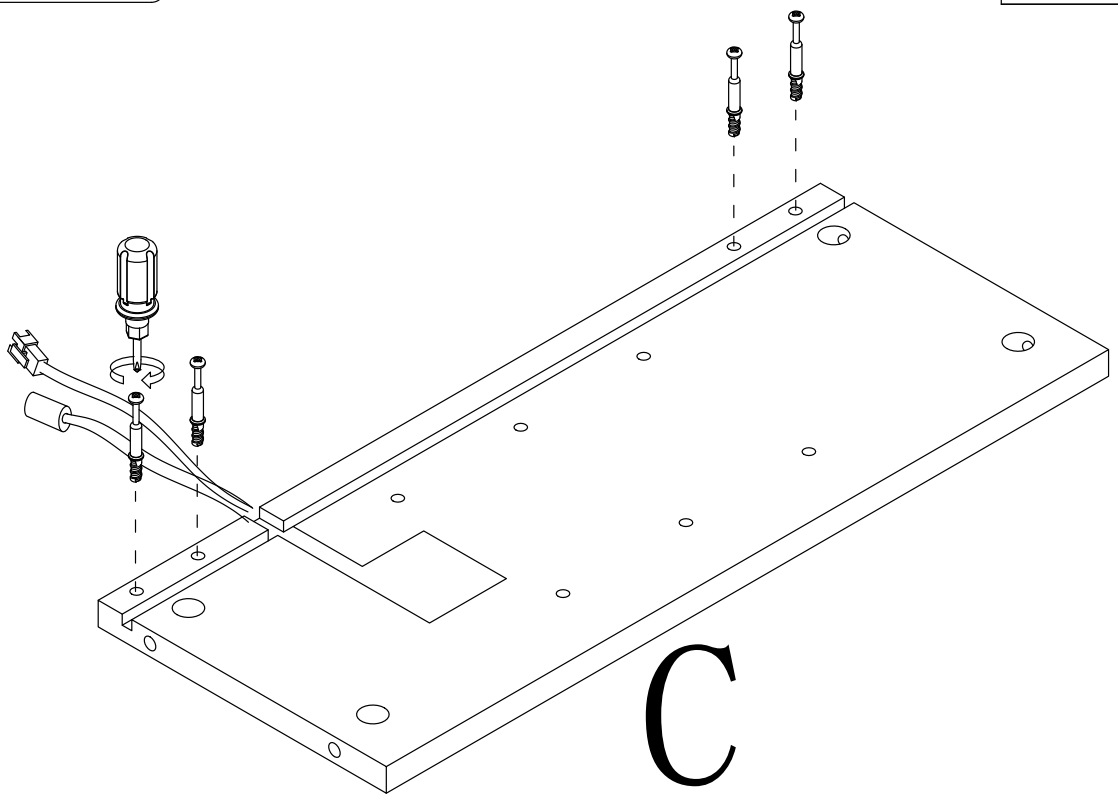

Step 3

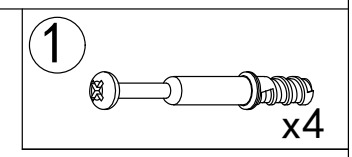

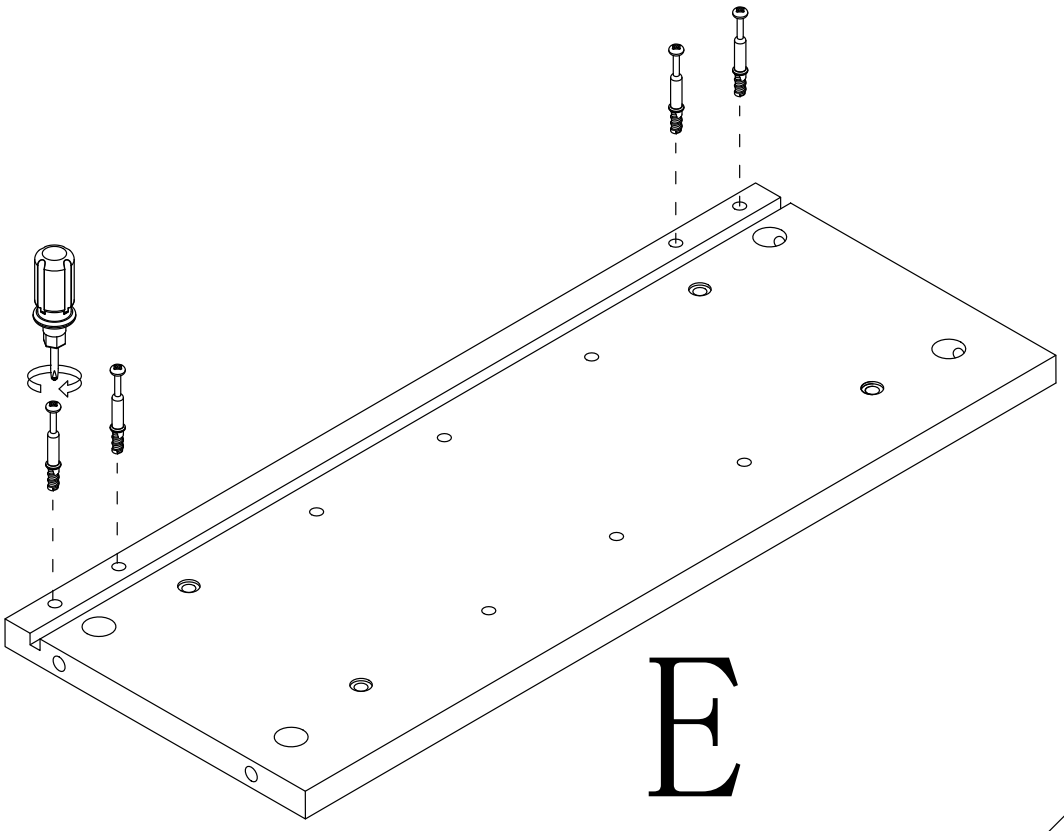

Step 4

2 x 4

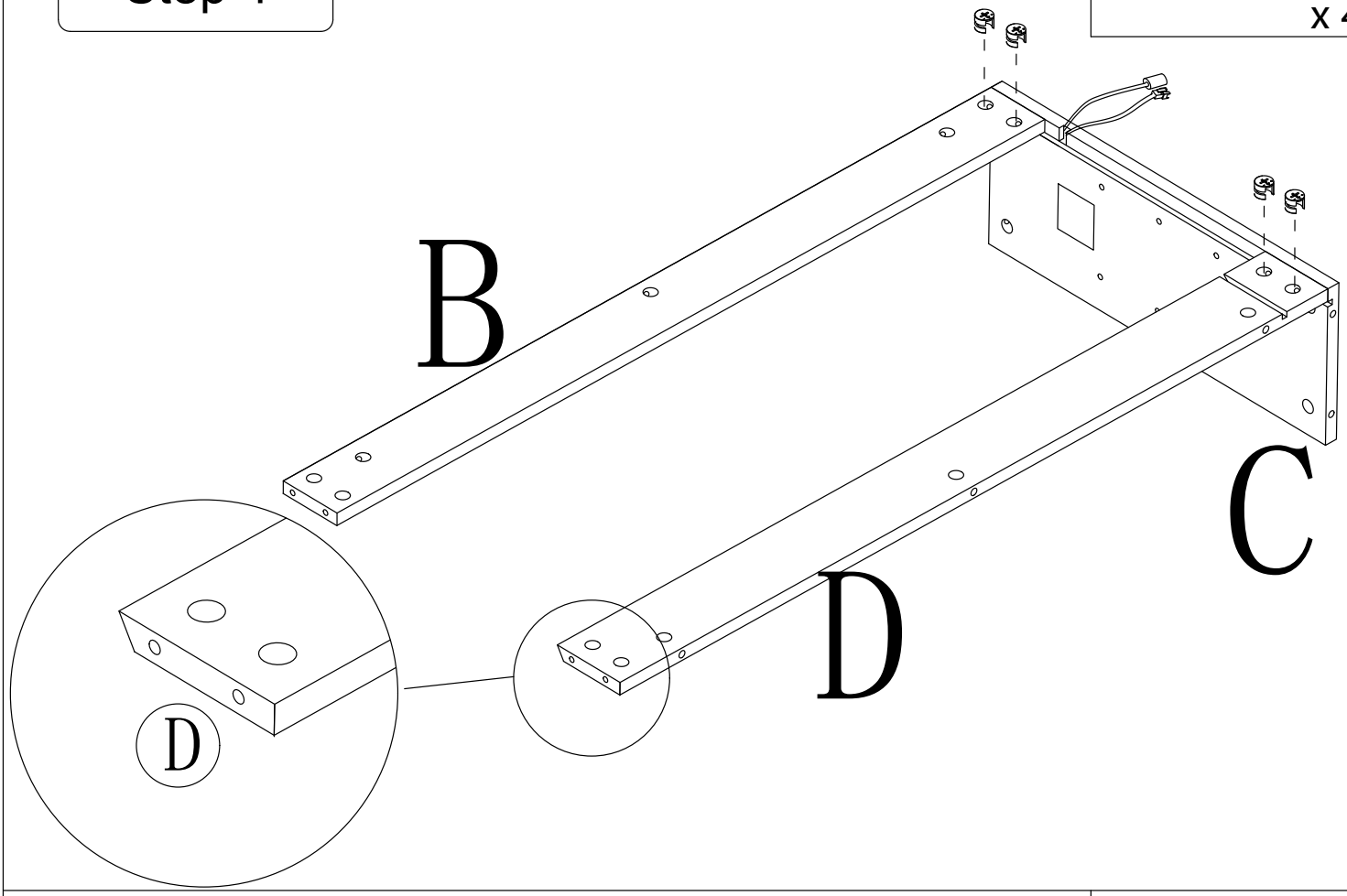

Step 5

2 x 4

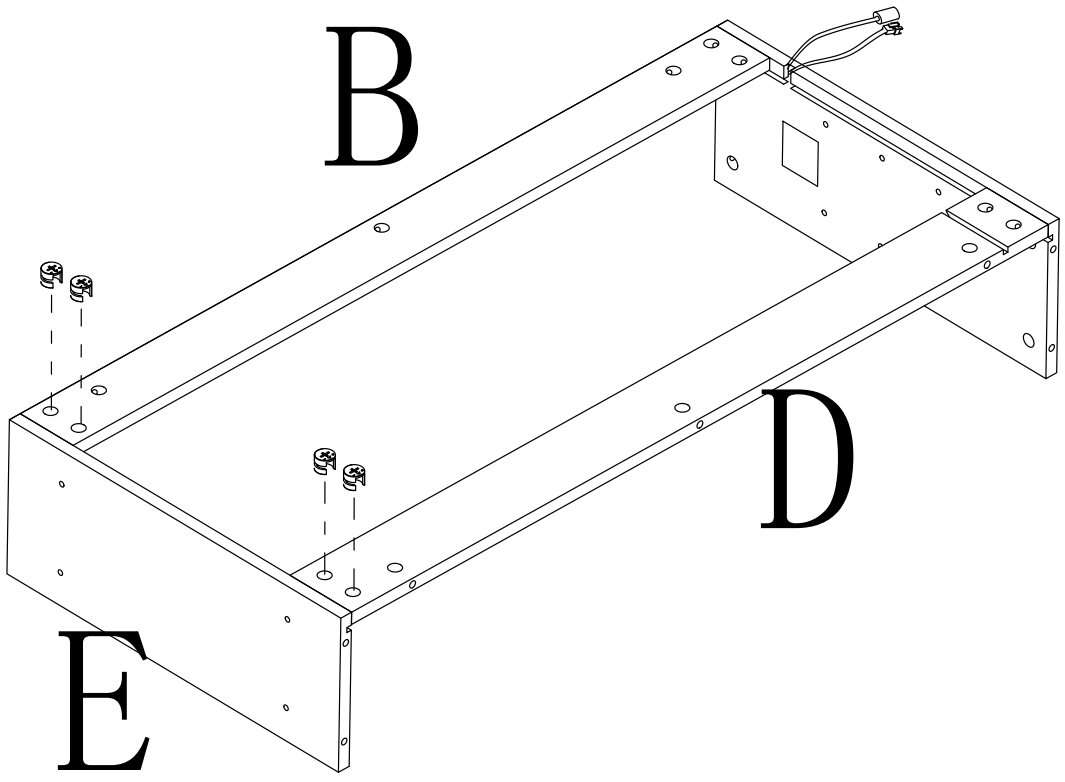

Step 6

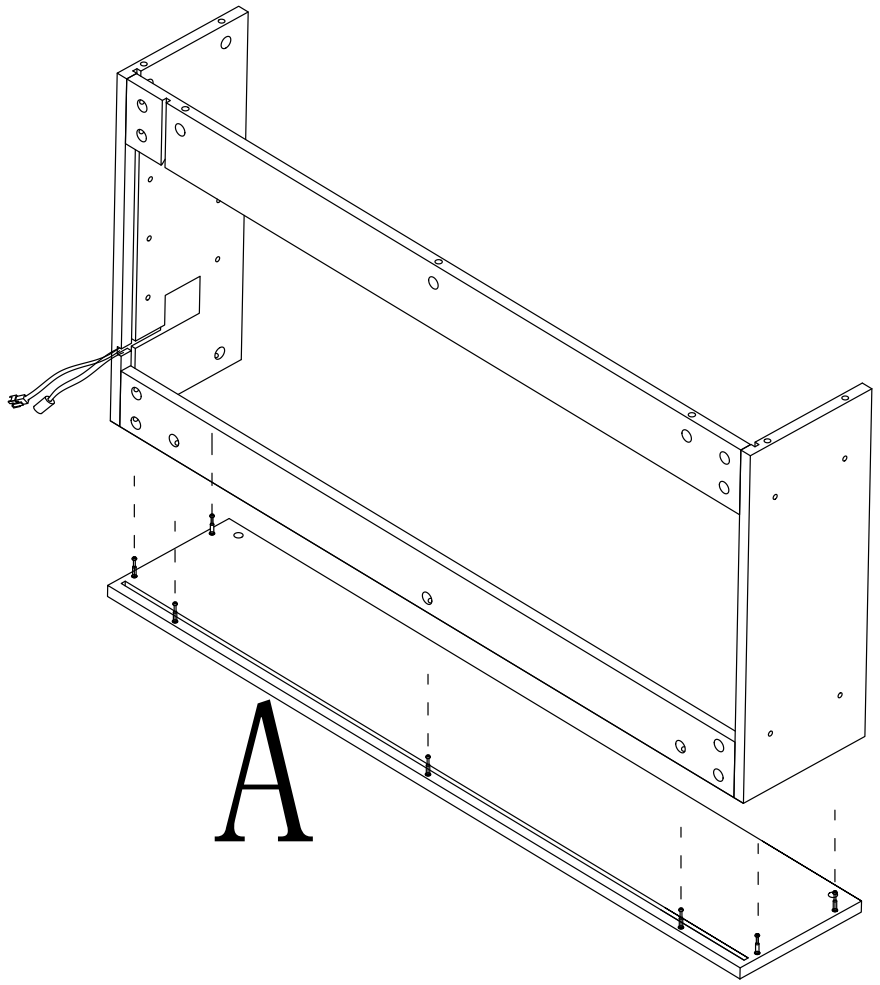

Step 7

2  x 7

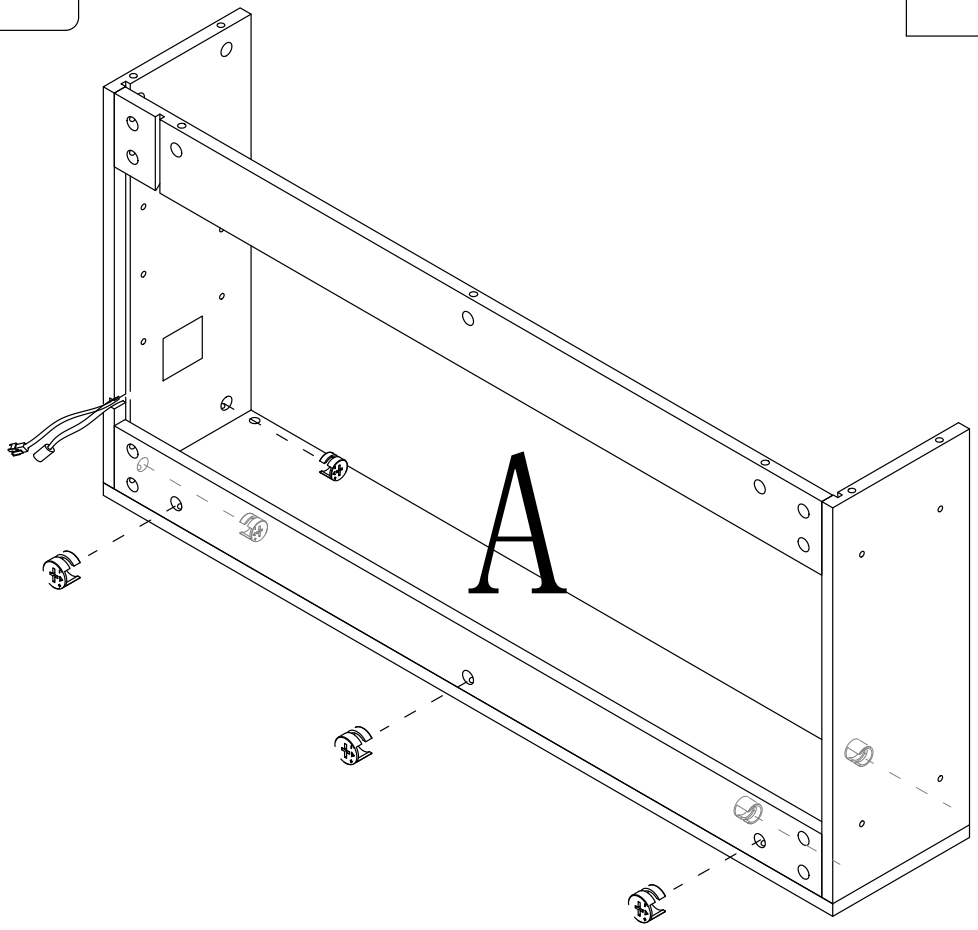

Step 8

9 x1

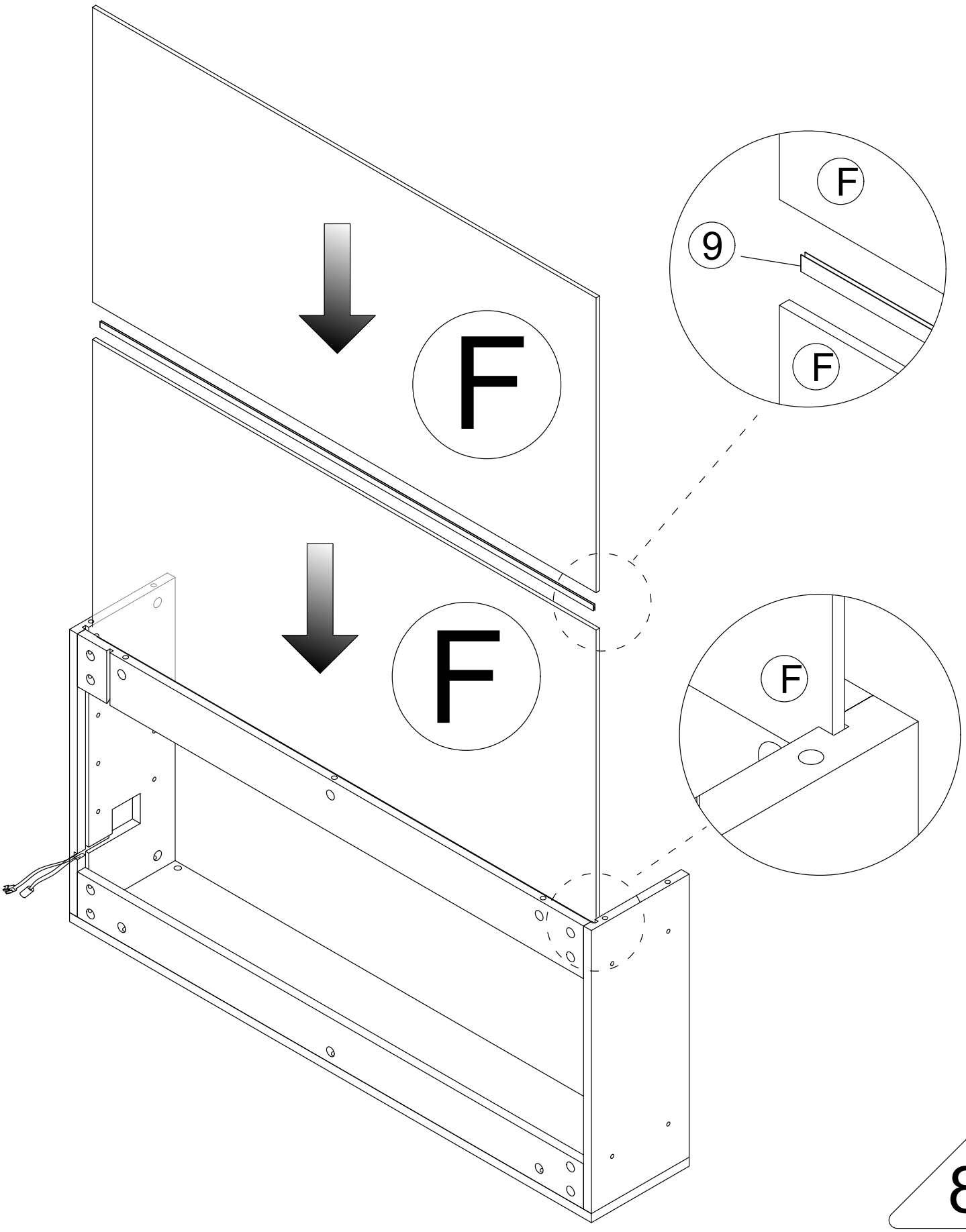

8

Step 9

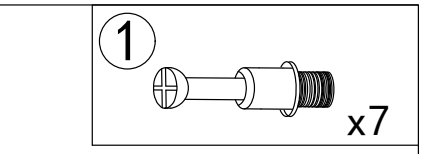

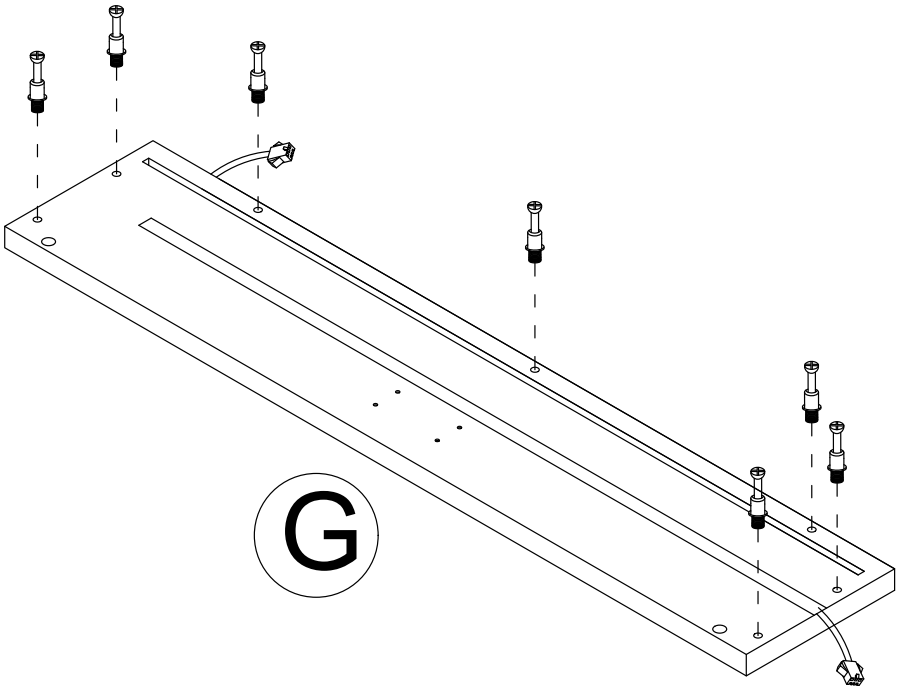

Step 10

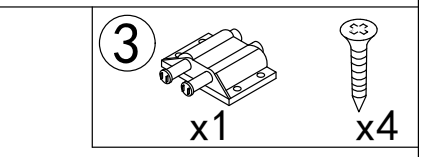

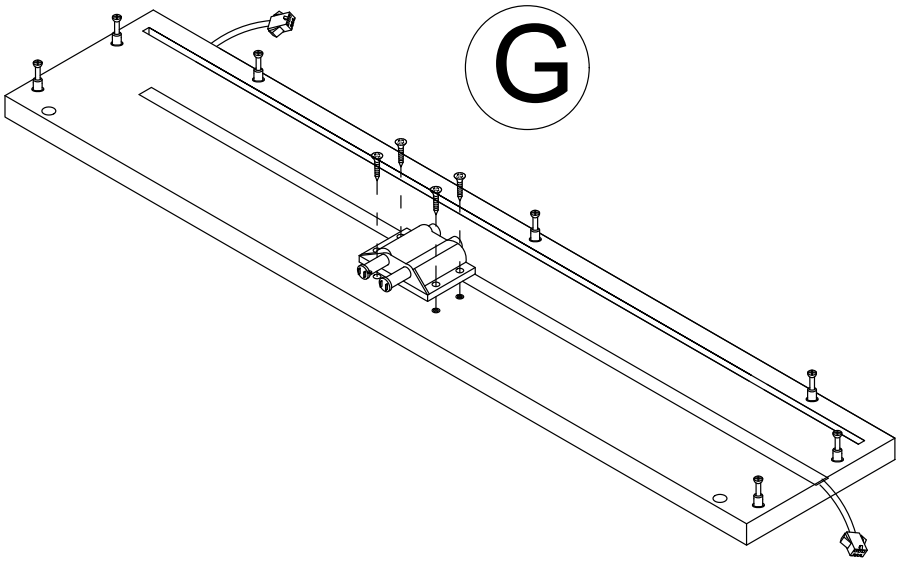

Step 11

2

x 7

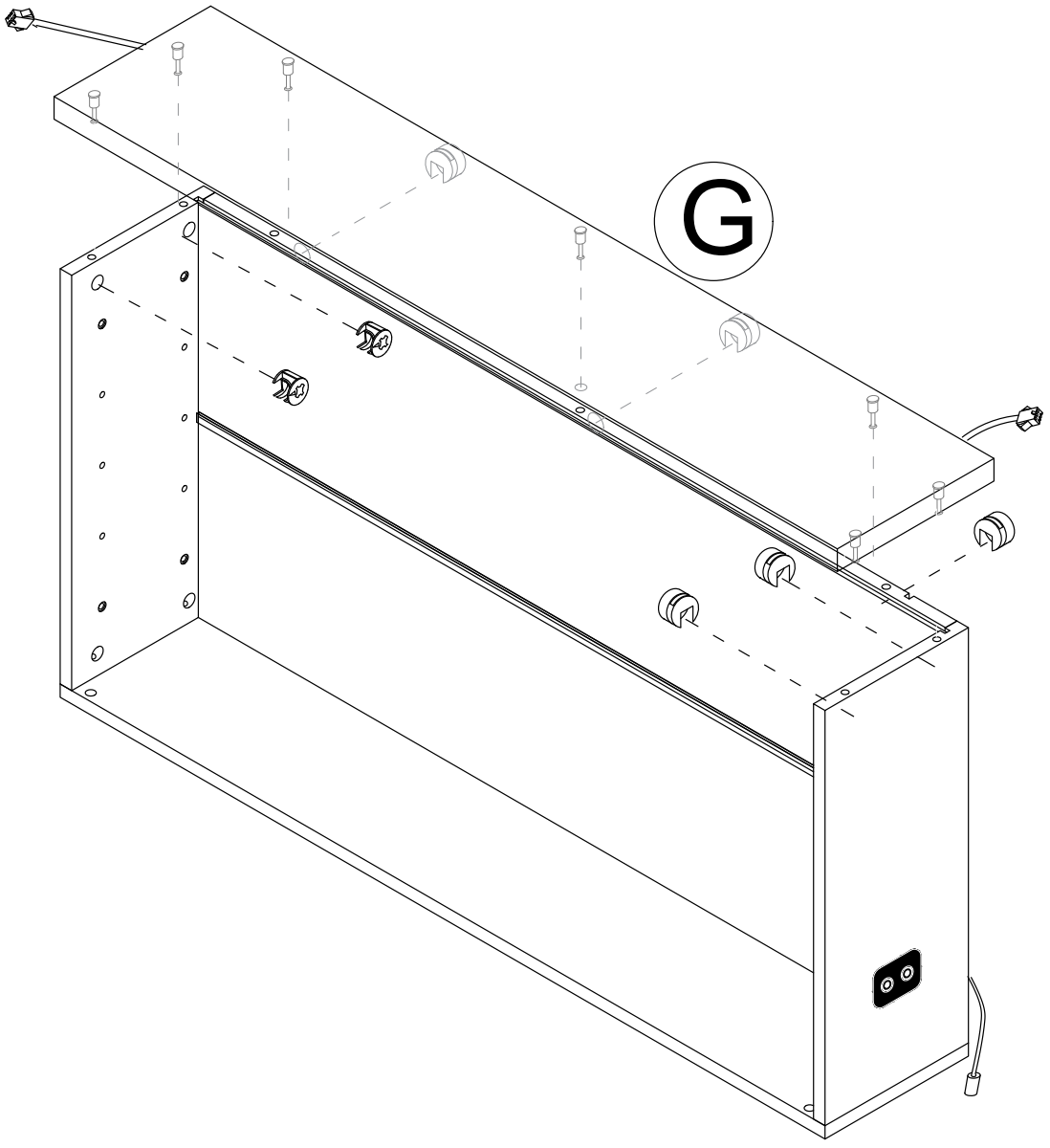

Step 12

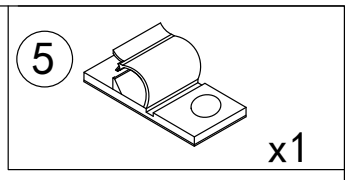

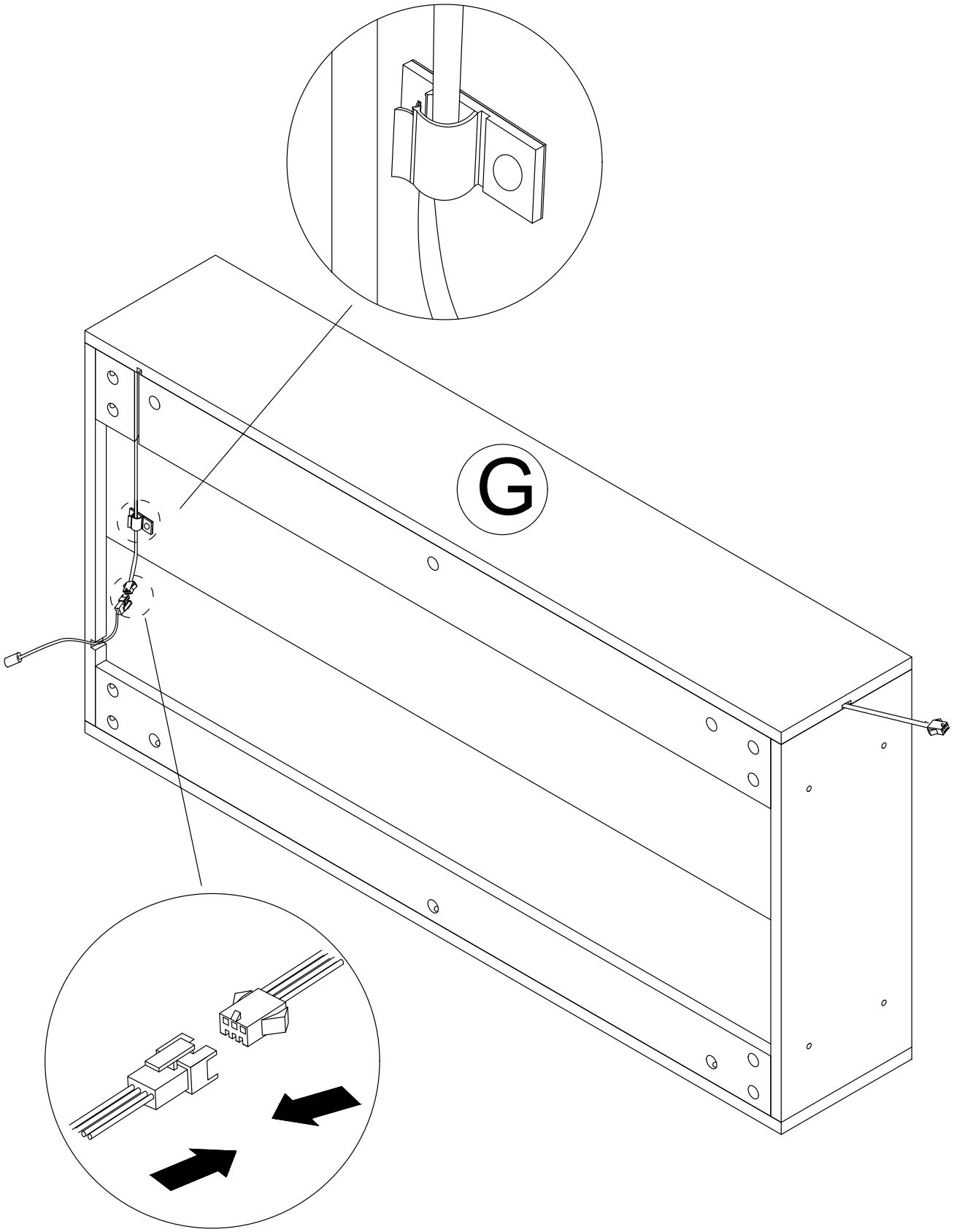

Step 13

6 x4

7 x4

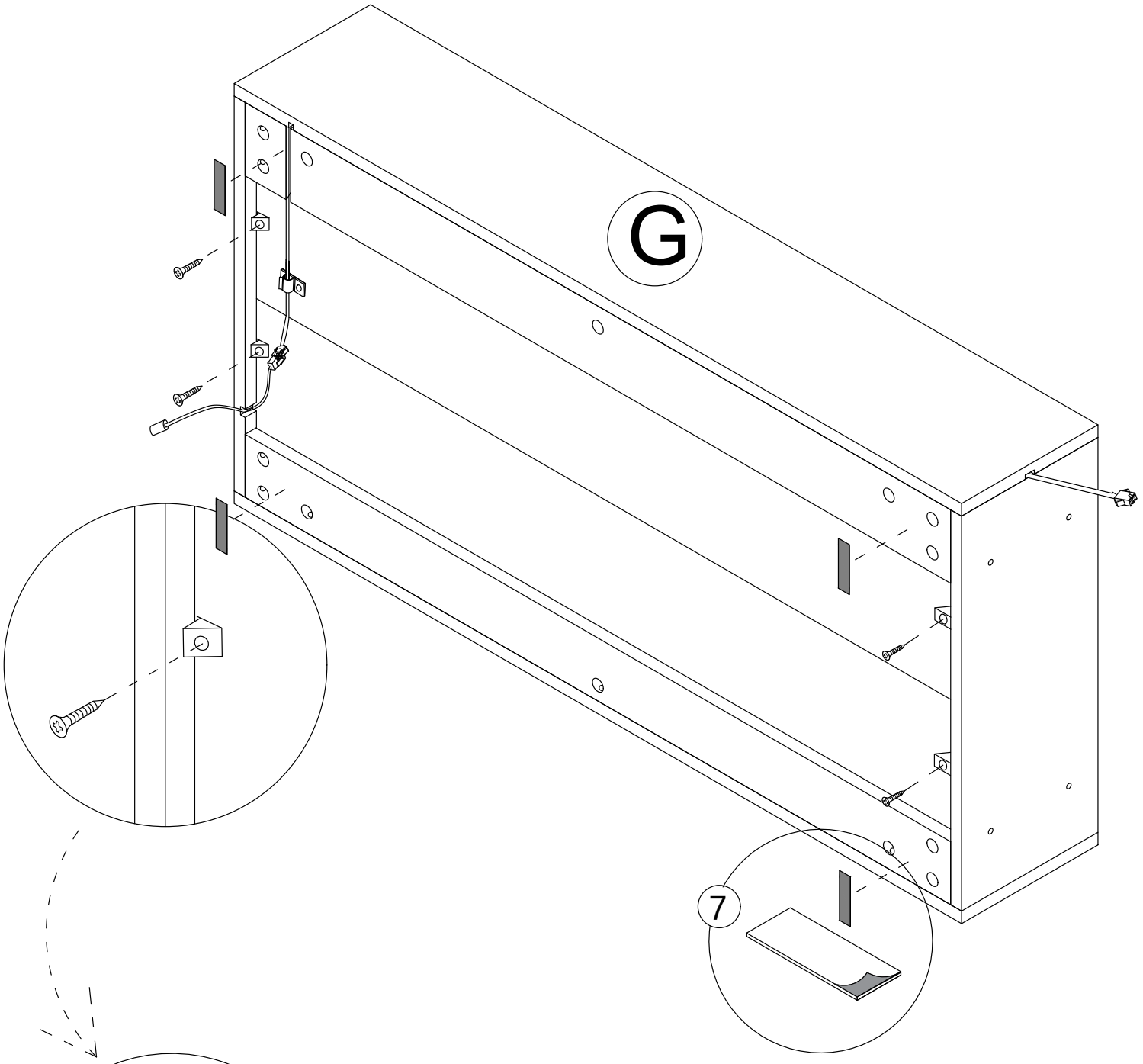

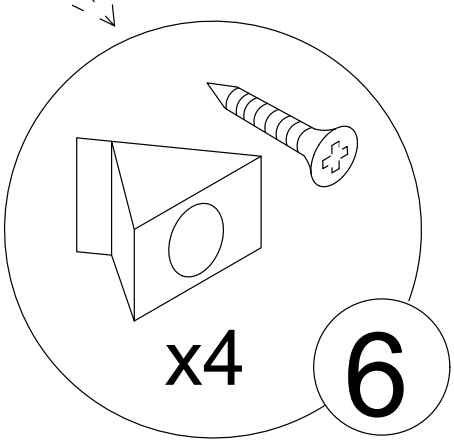

Tear off release paper and stick the black foot pad on the board

Step 14

8 x3

x3

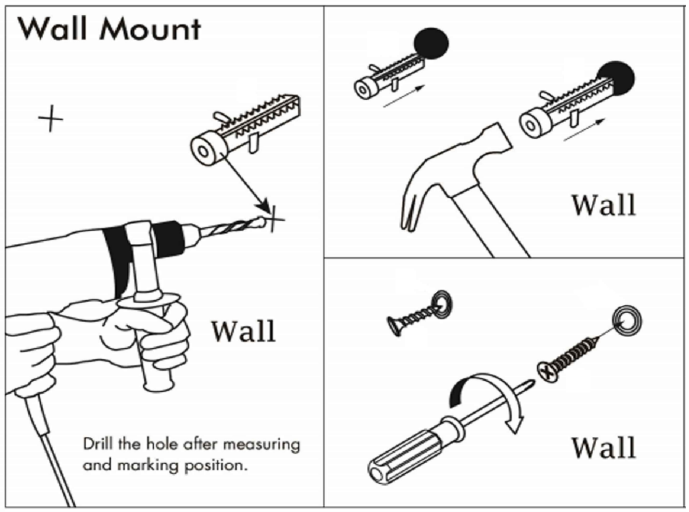

1.Choose the height that suits you
Drill the hole with an electric drill and punch in the colloidal particles

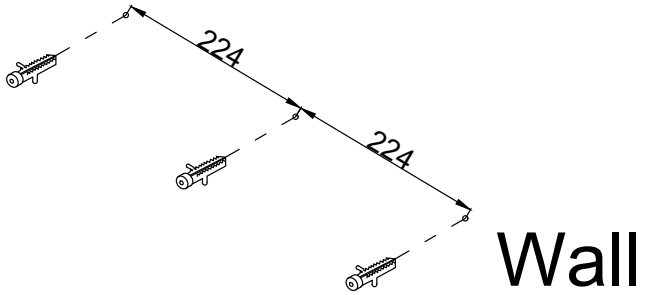

2.Fix the L board to the wall

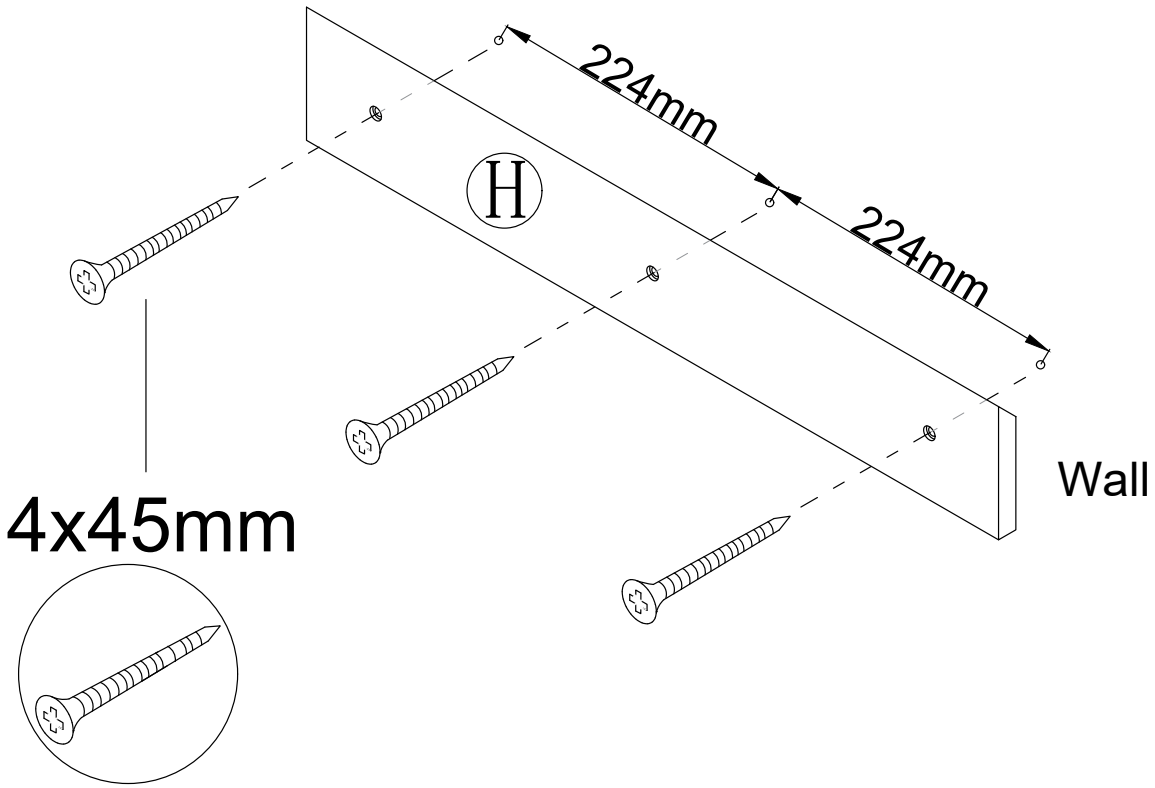

Step 15

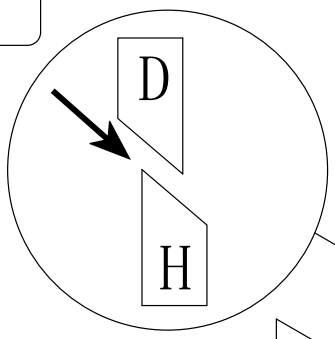

Insert it into the cut

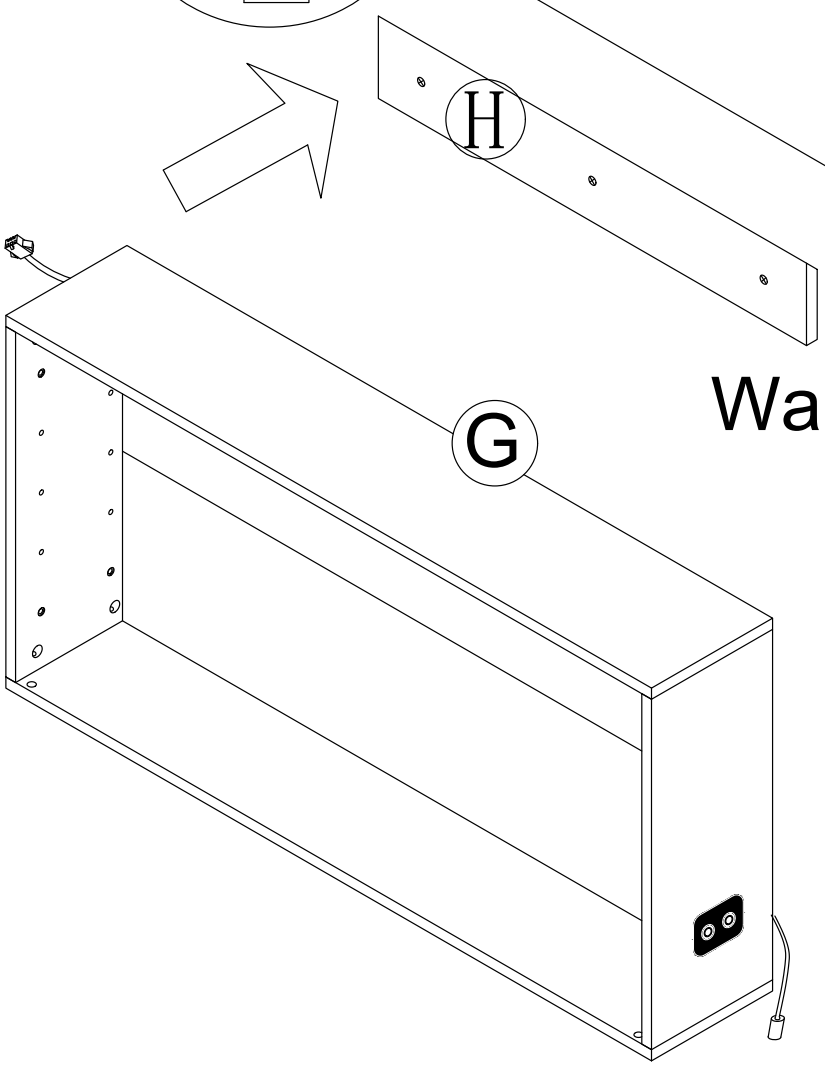

Wall

Step 16

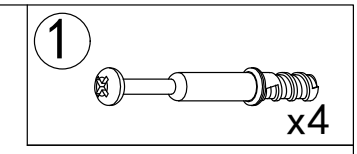

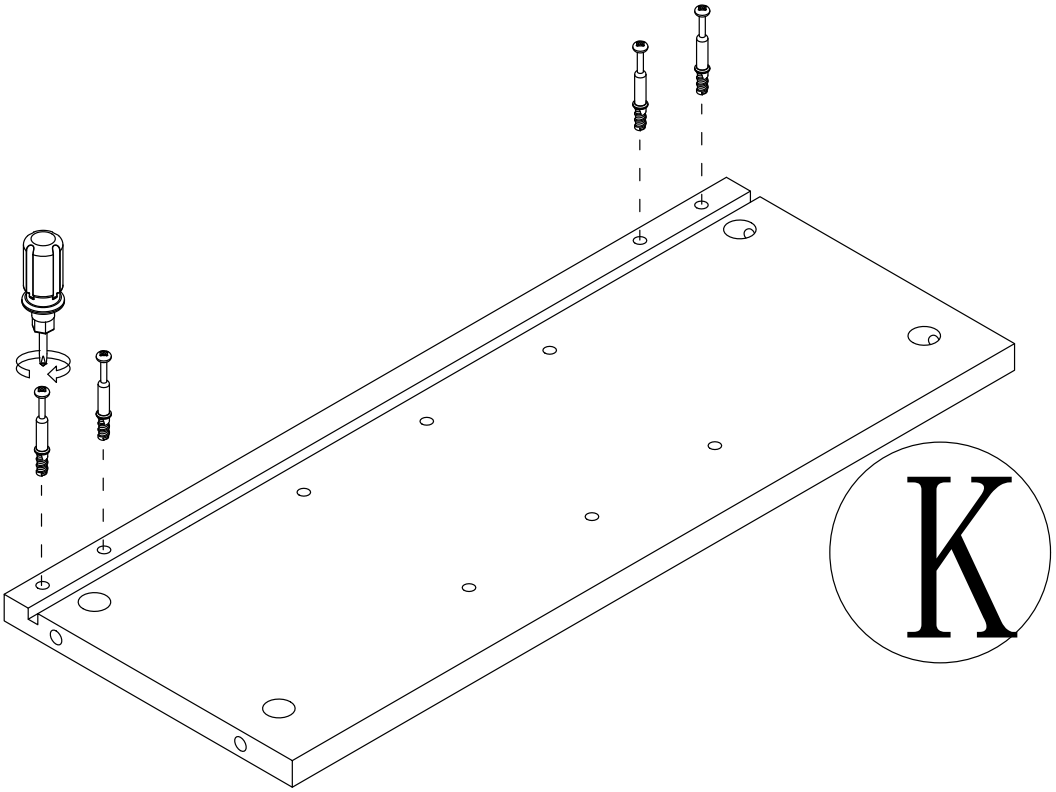

Step 17

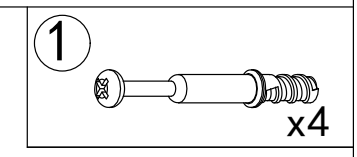

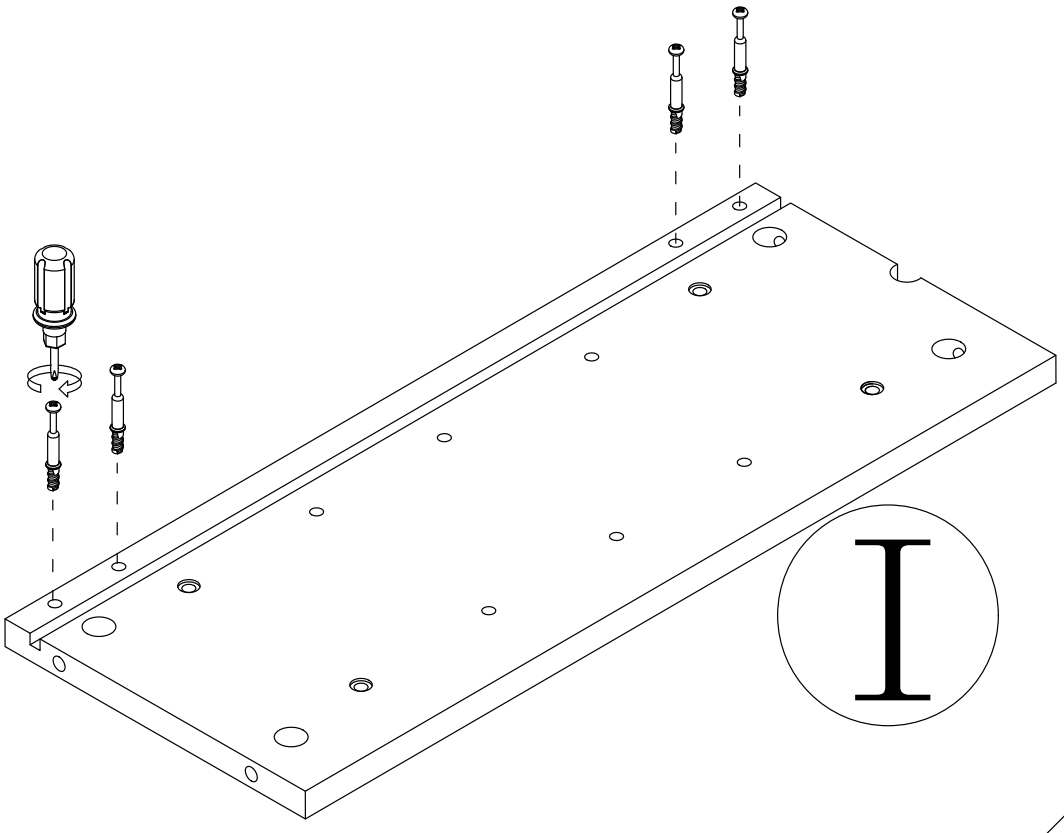

Step 18

2 x 4

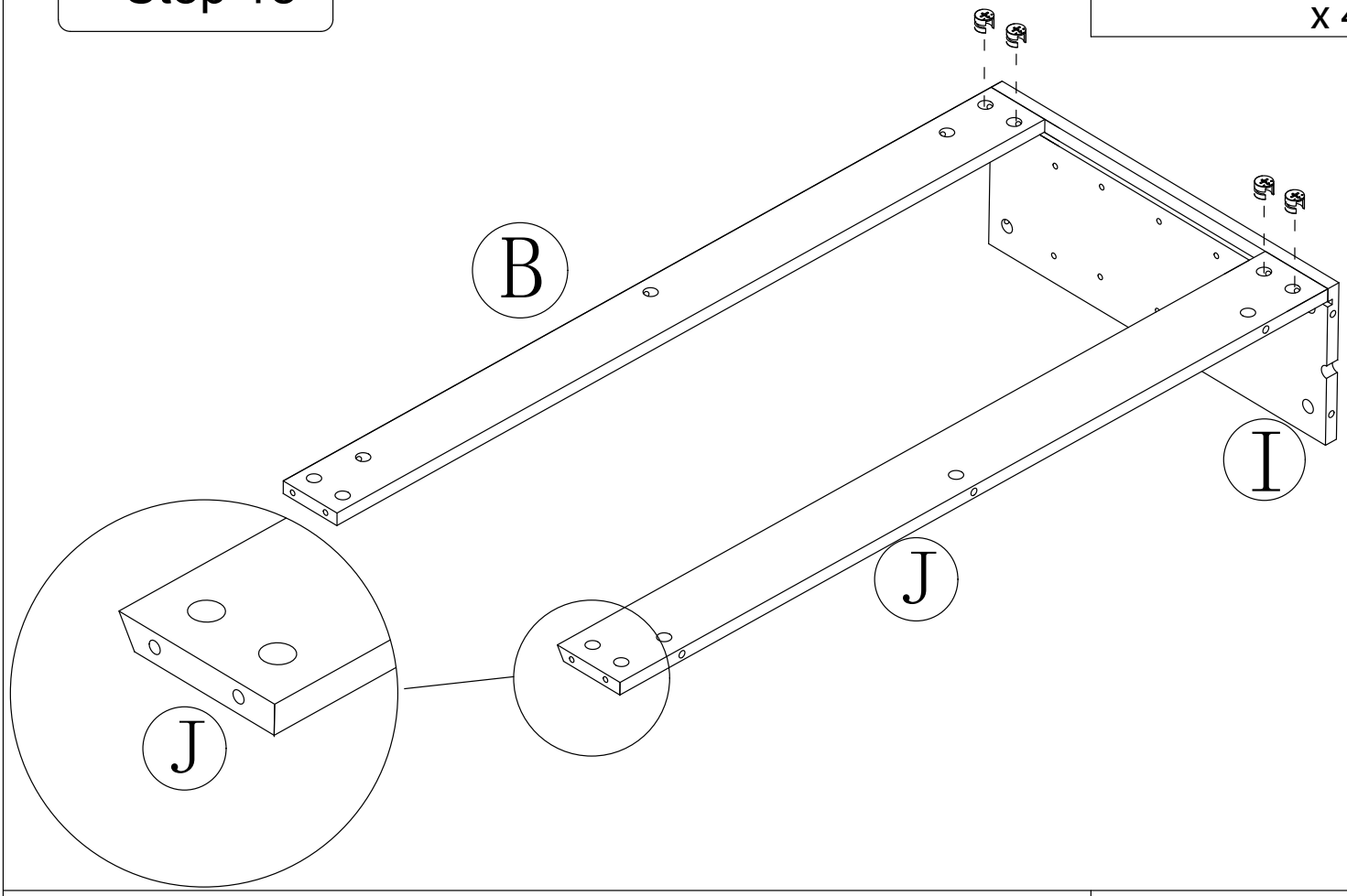

Step 19

2 x 4

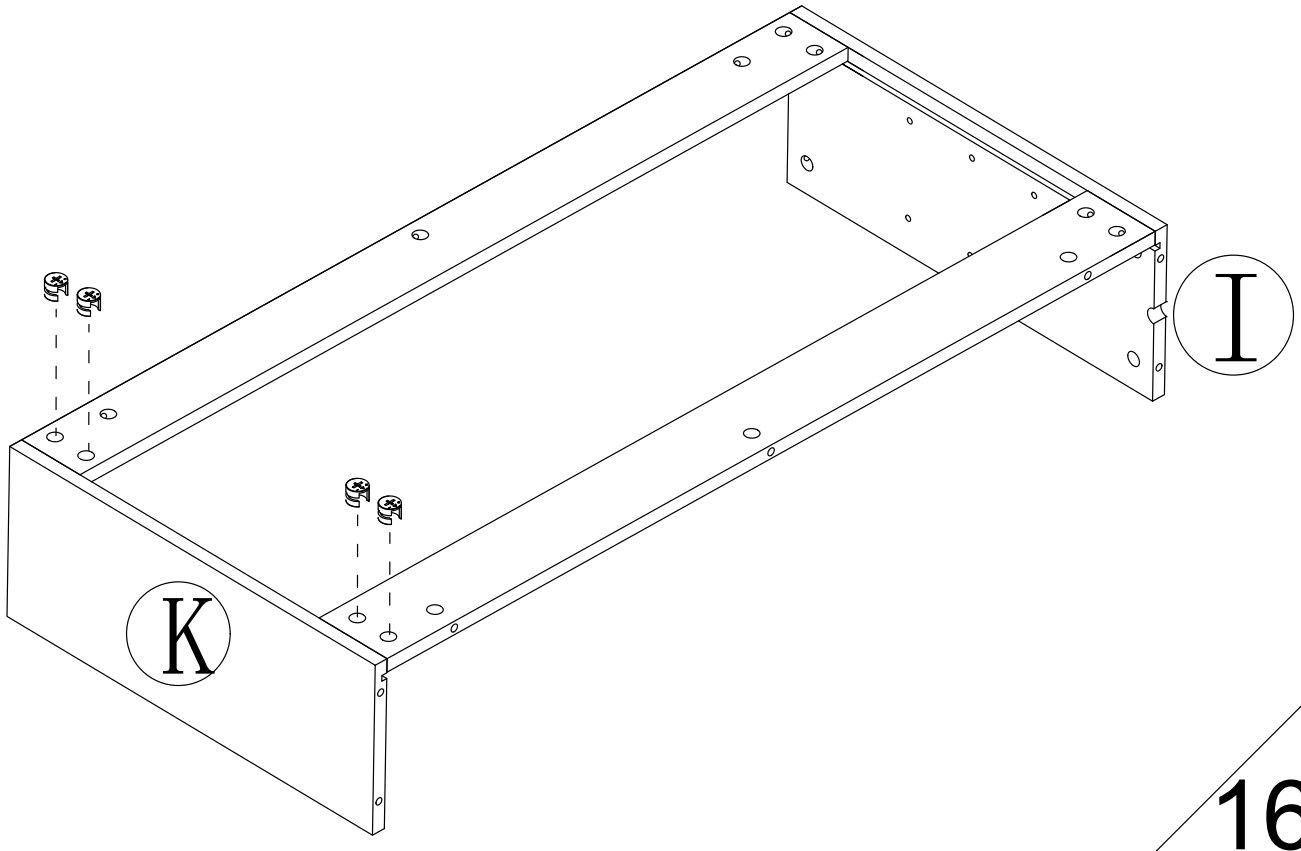

Step 20

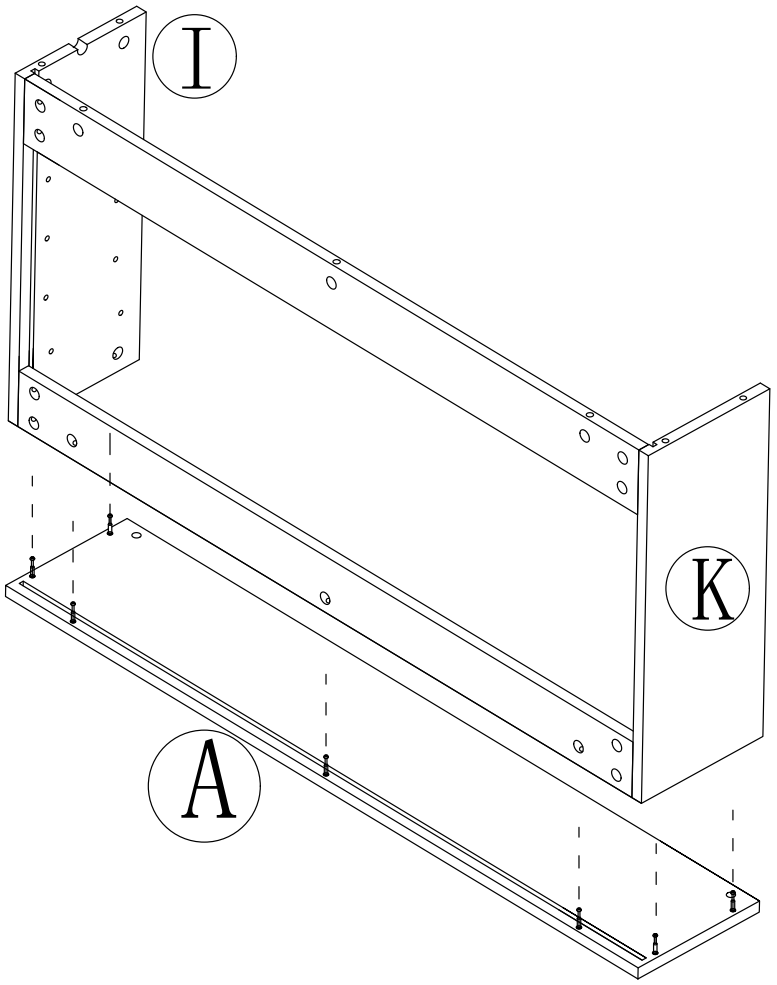

Step 21

2 x 7

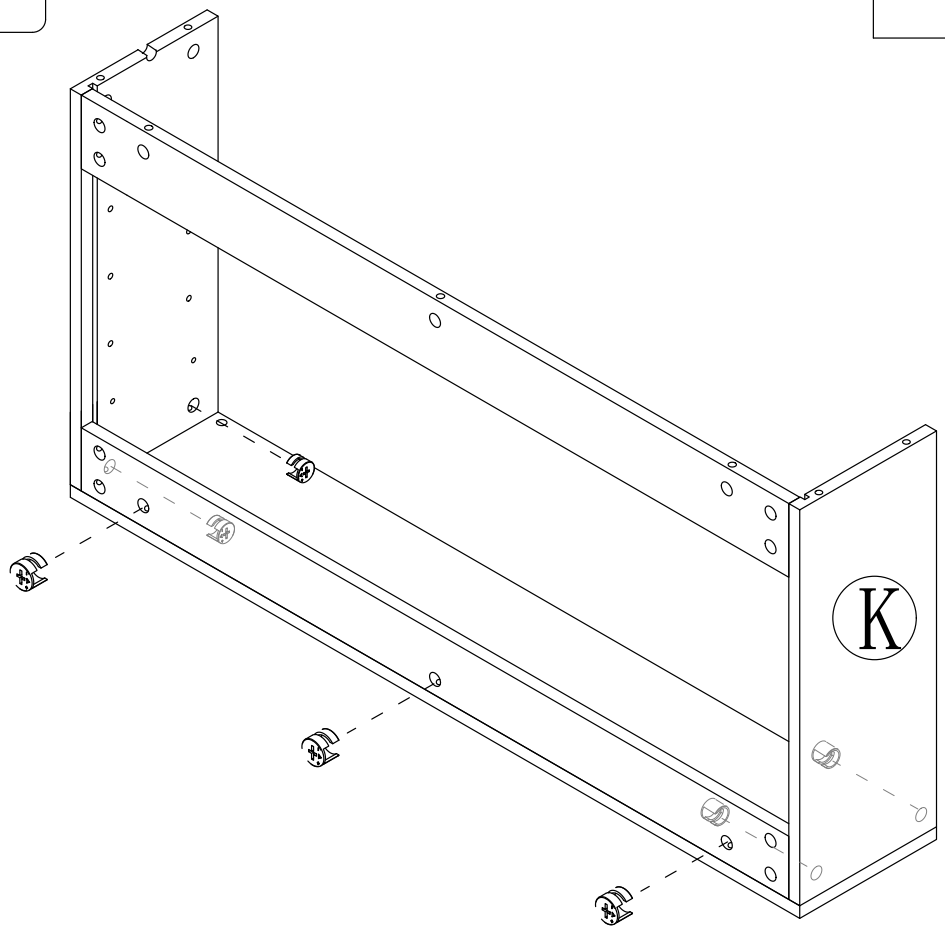

Step 22

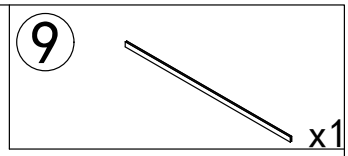

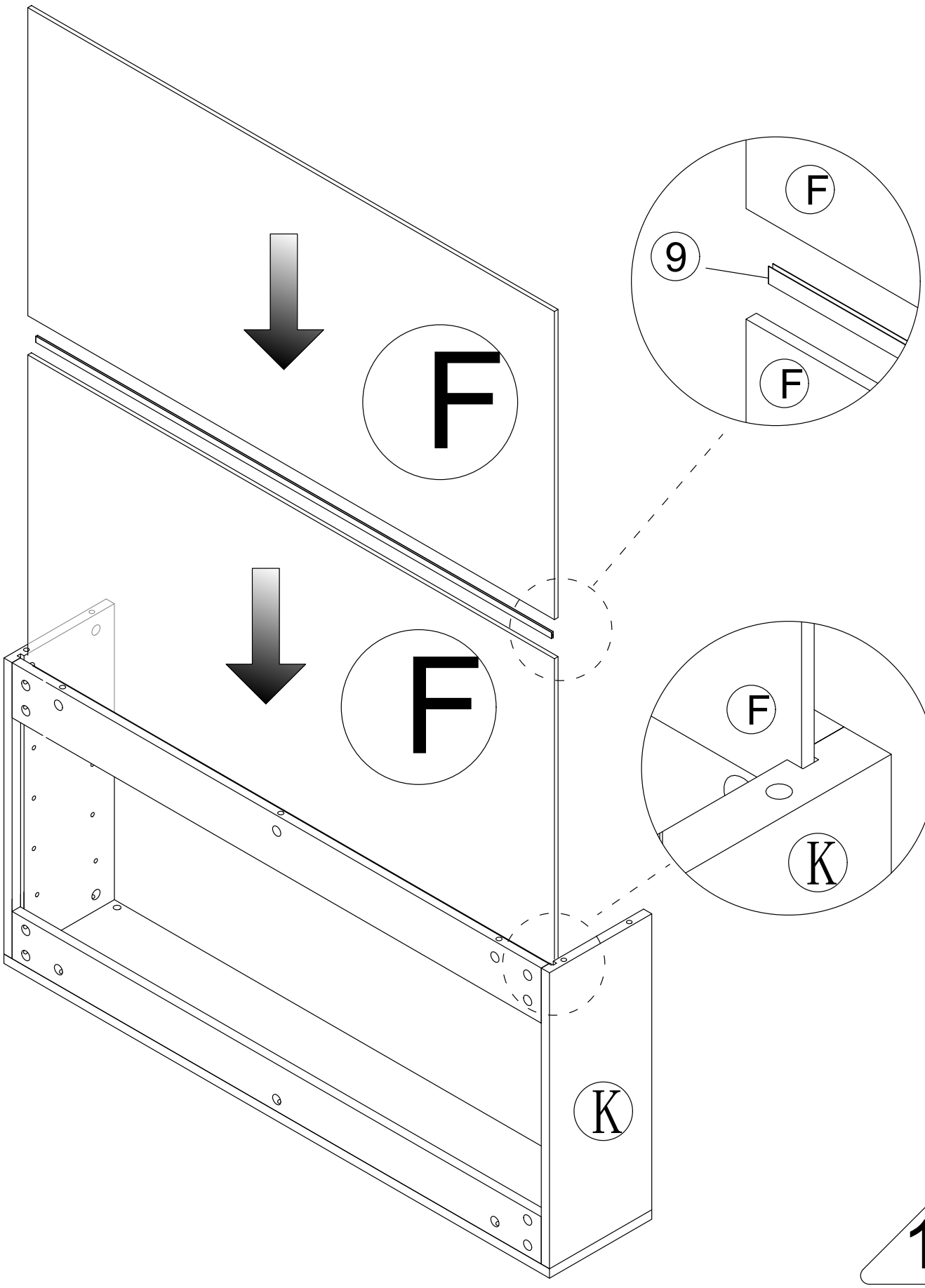

Step 23

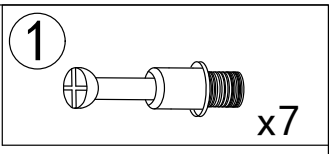

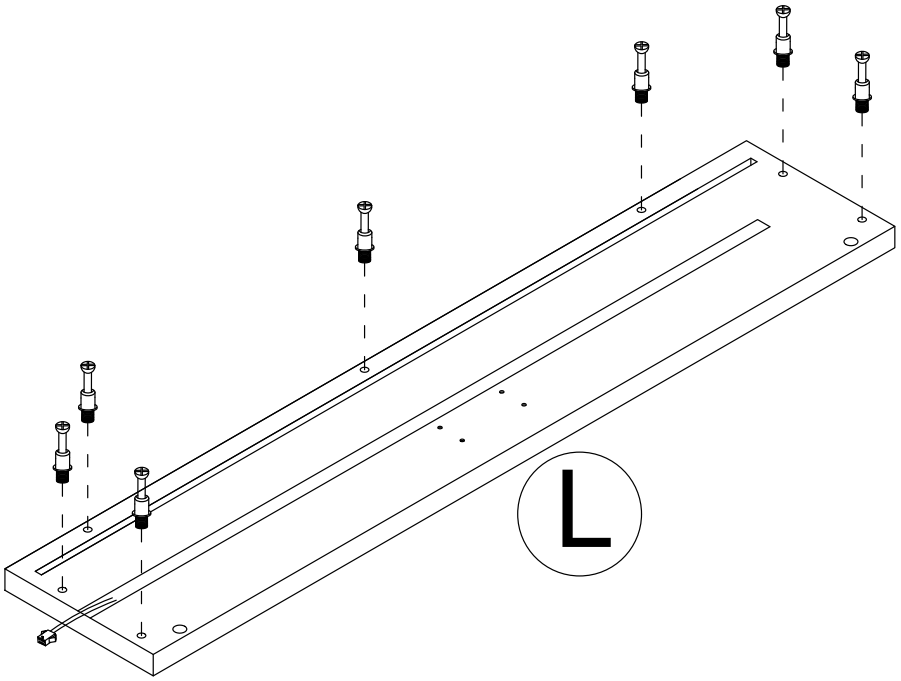

Step 24

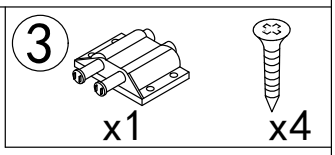

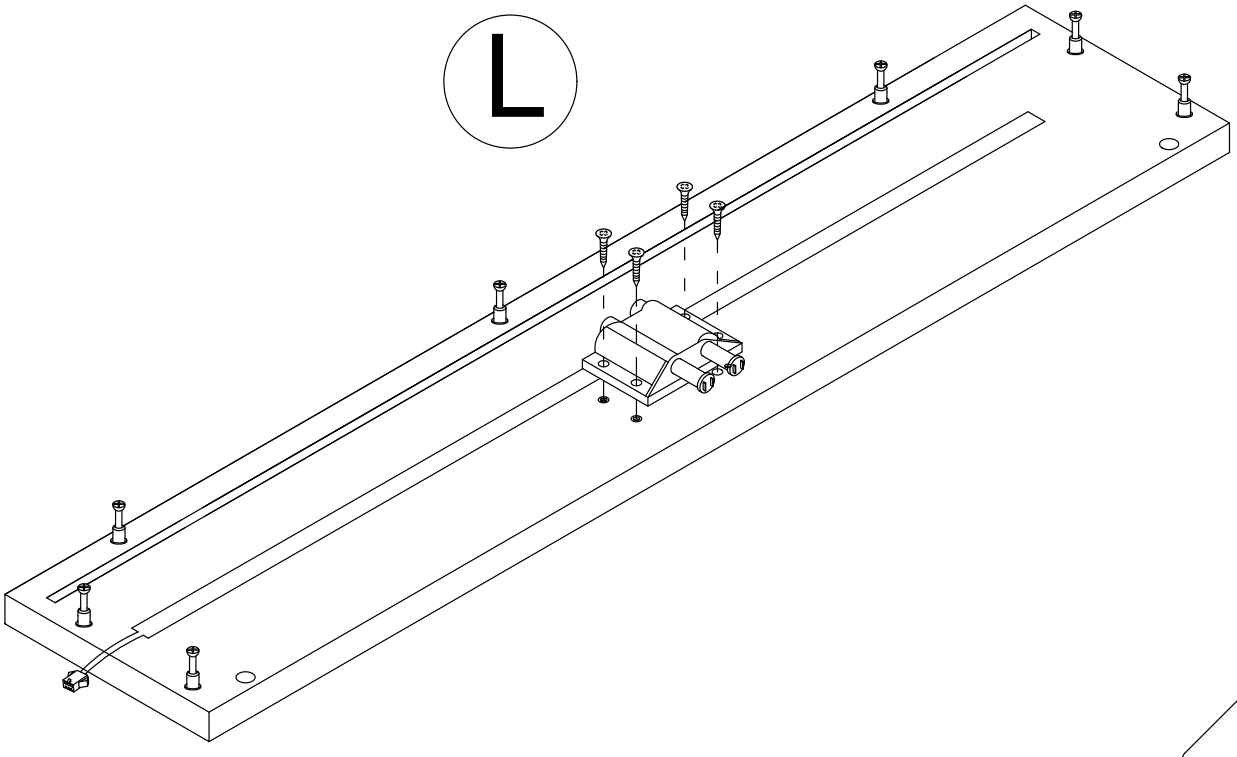

Step 25

2



x7

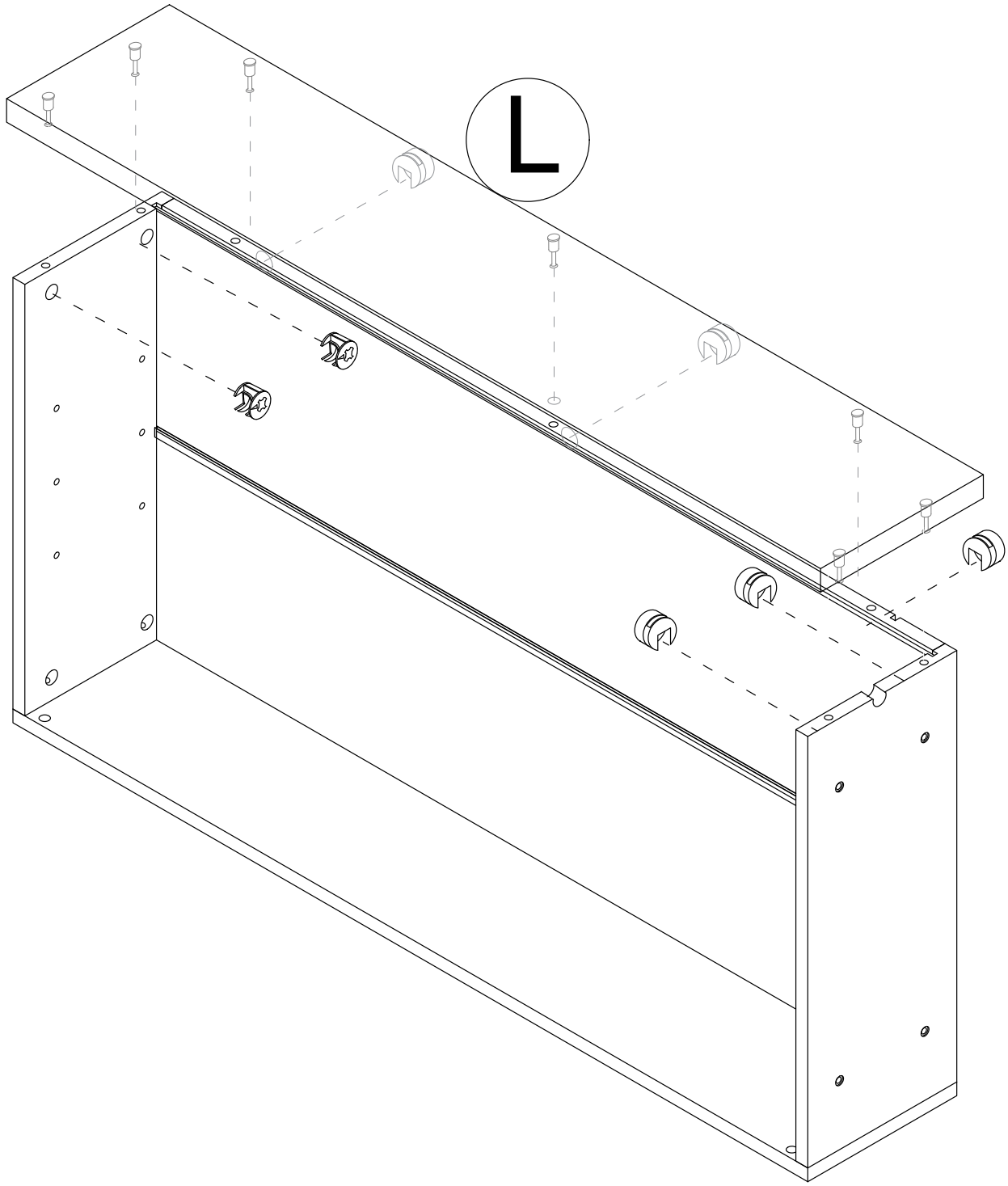

Step 26

6 x4

7 x4

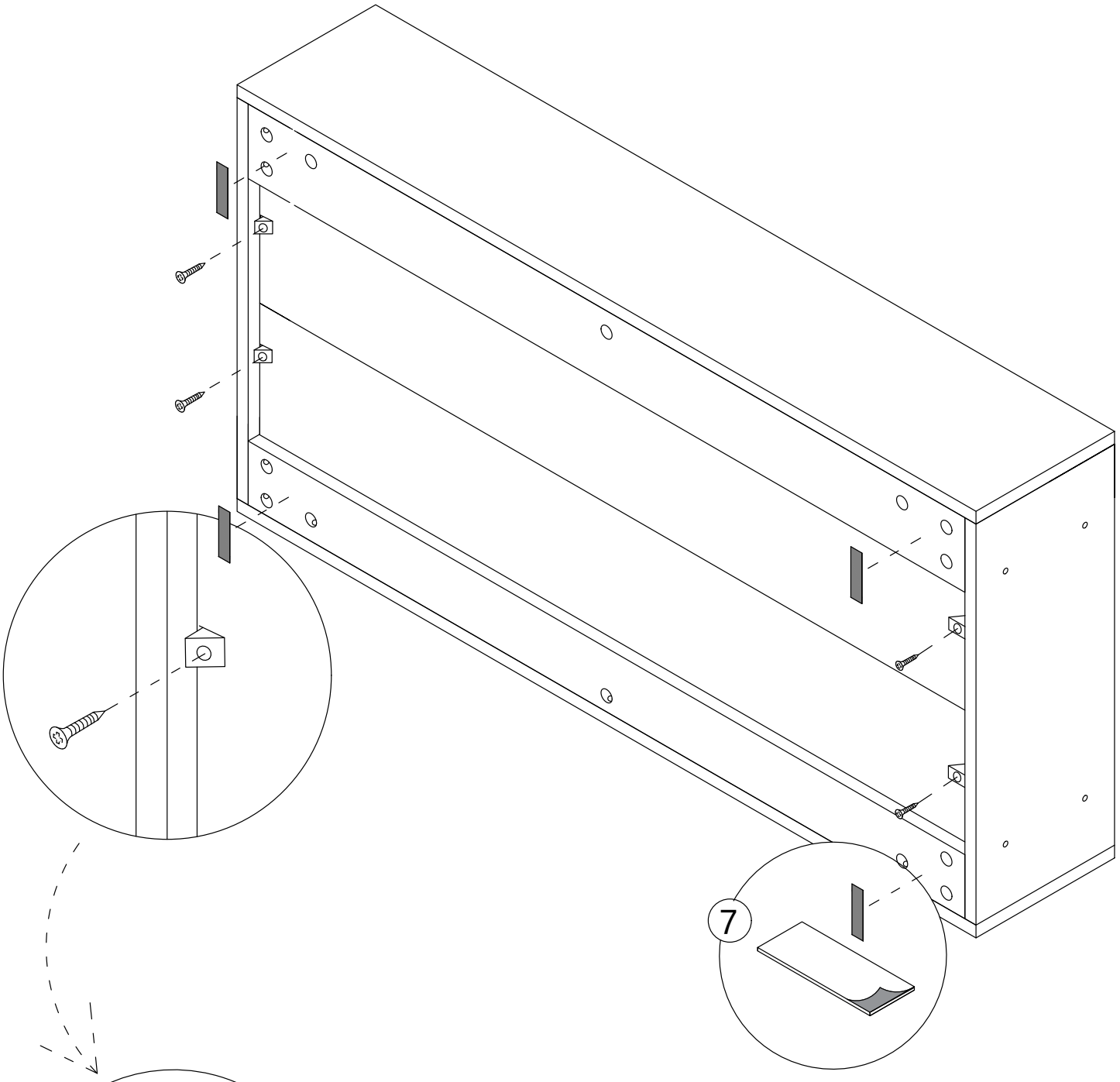

Tear off release paper and stick the black foot pad on the board

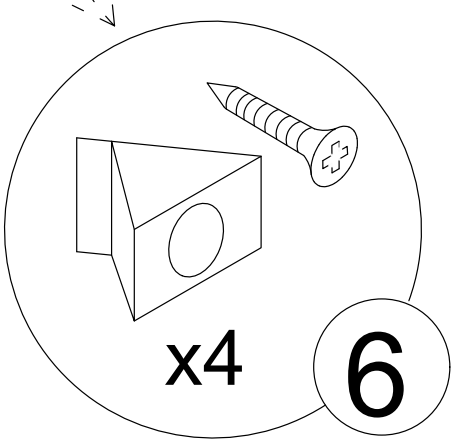

Step 27

8 x3 x3

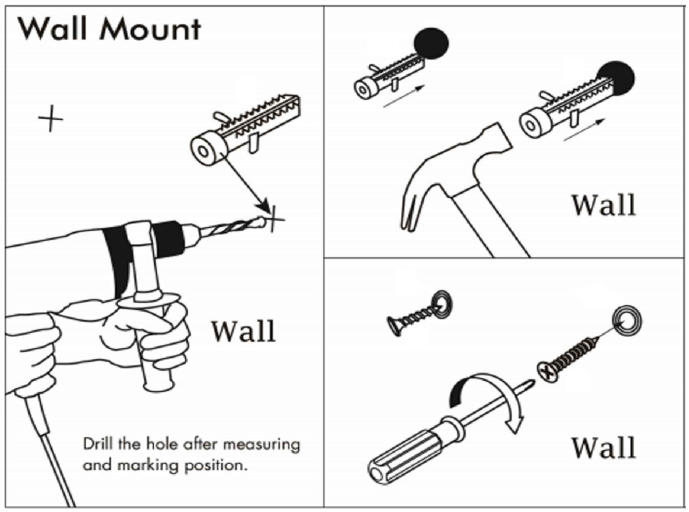

1.Choose the height that suits you
Drill the hole with an electric drill and punch in the colloidal particles

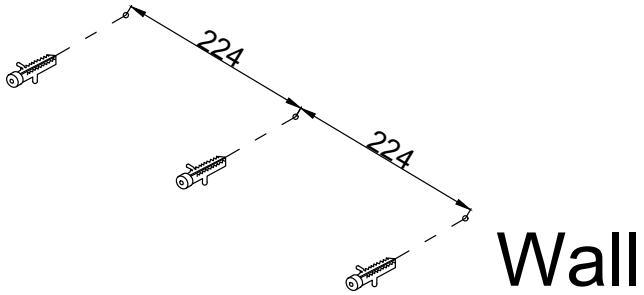

2.Fix the L board to the wall

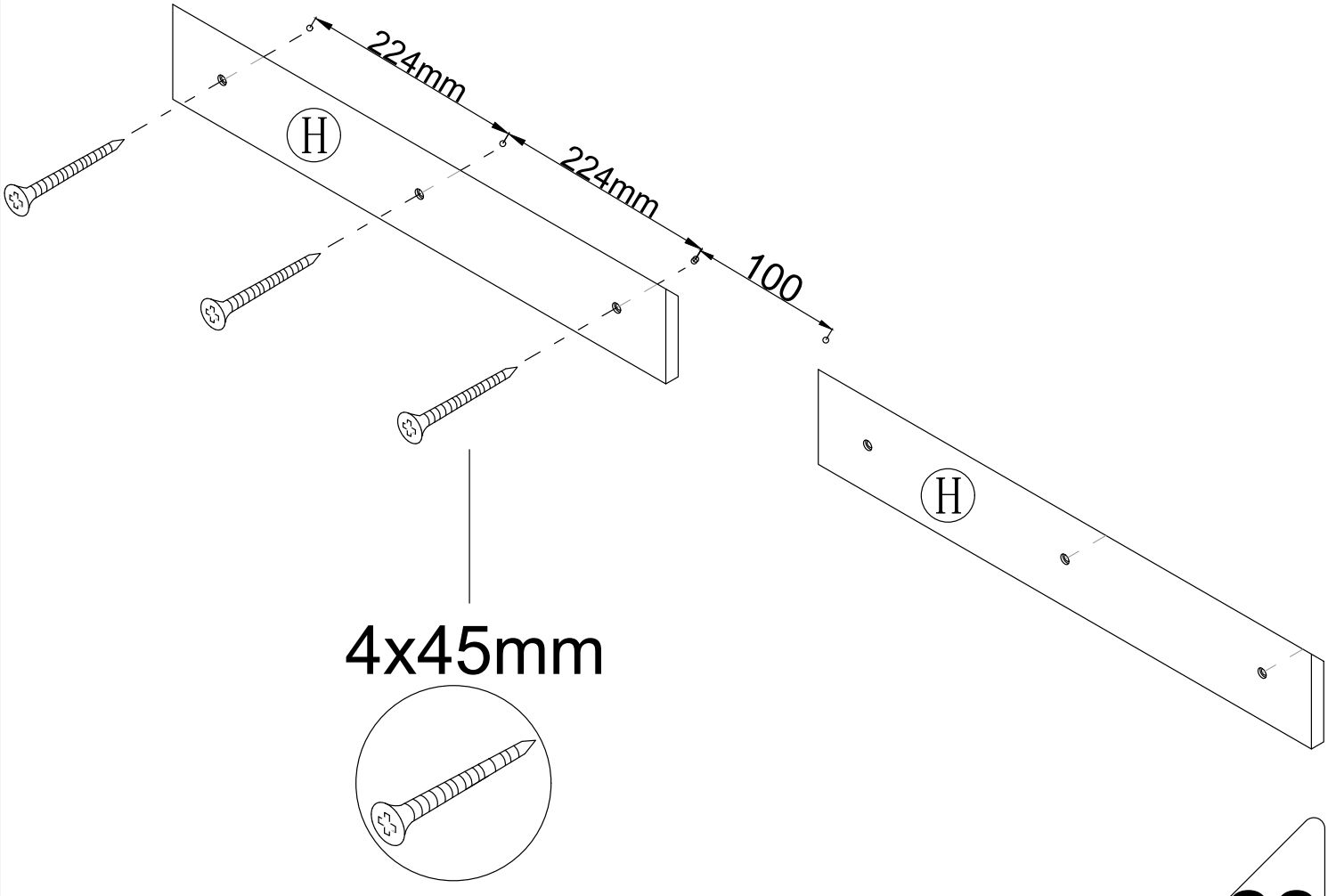

Step 28

Insert it into the cut

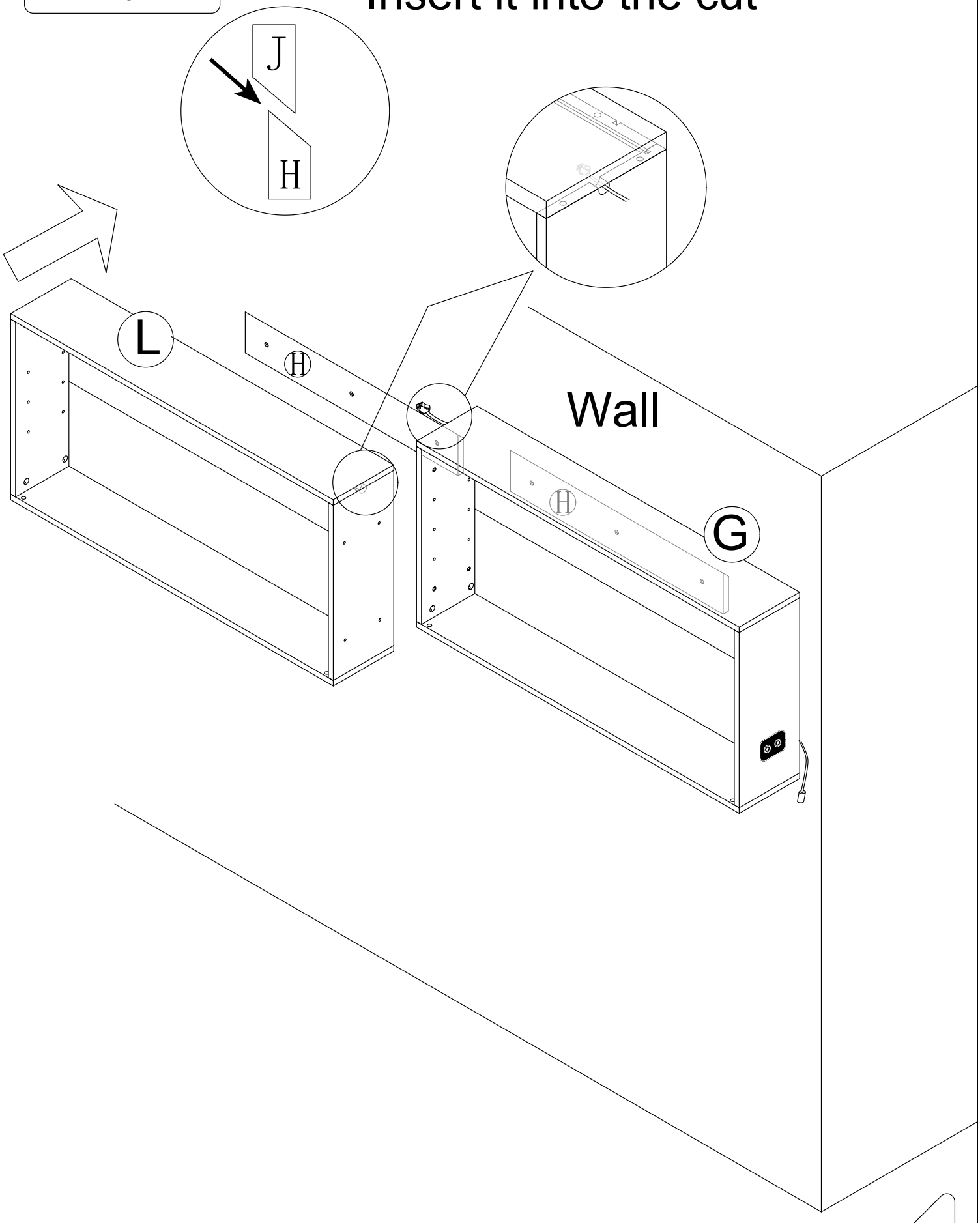

Step 29

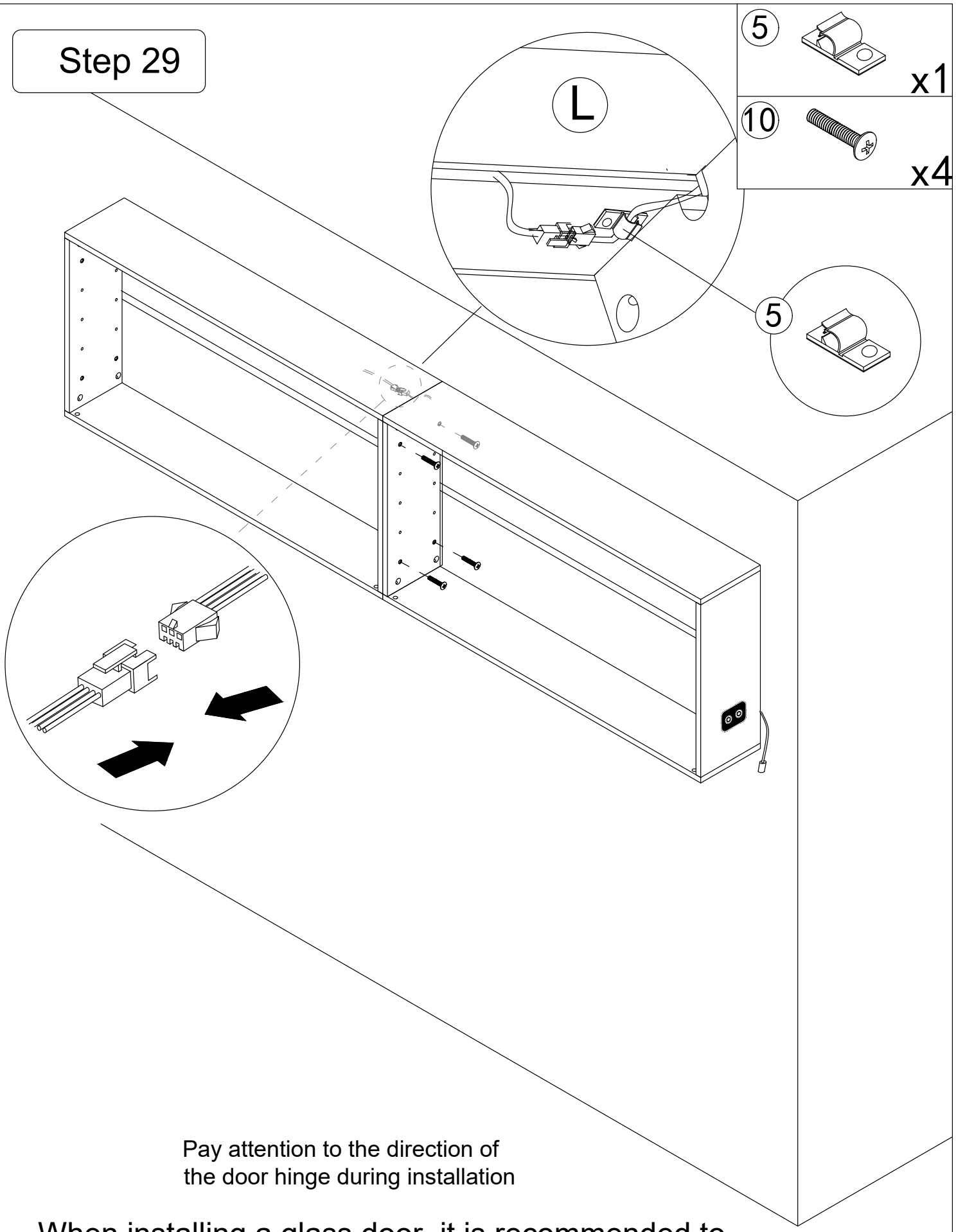

Pay attention to the direction of
the door hinge during installation

When installing a glass door, it is recommended to have two people install it to avoid the glass door colliding or hitting oneself.

Step 30

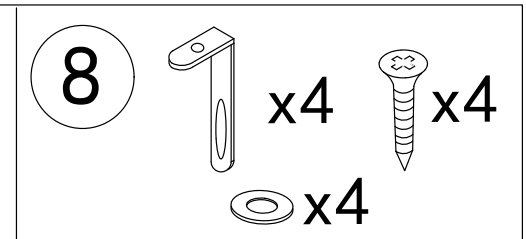

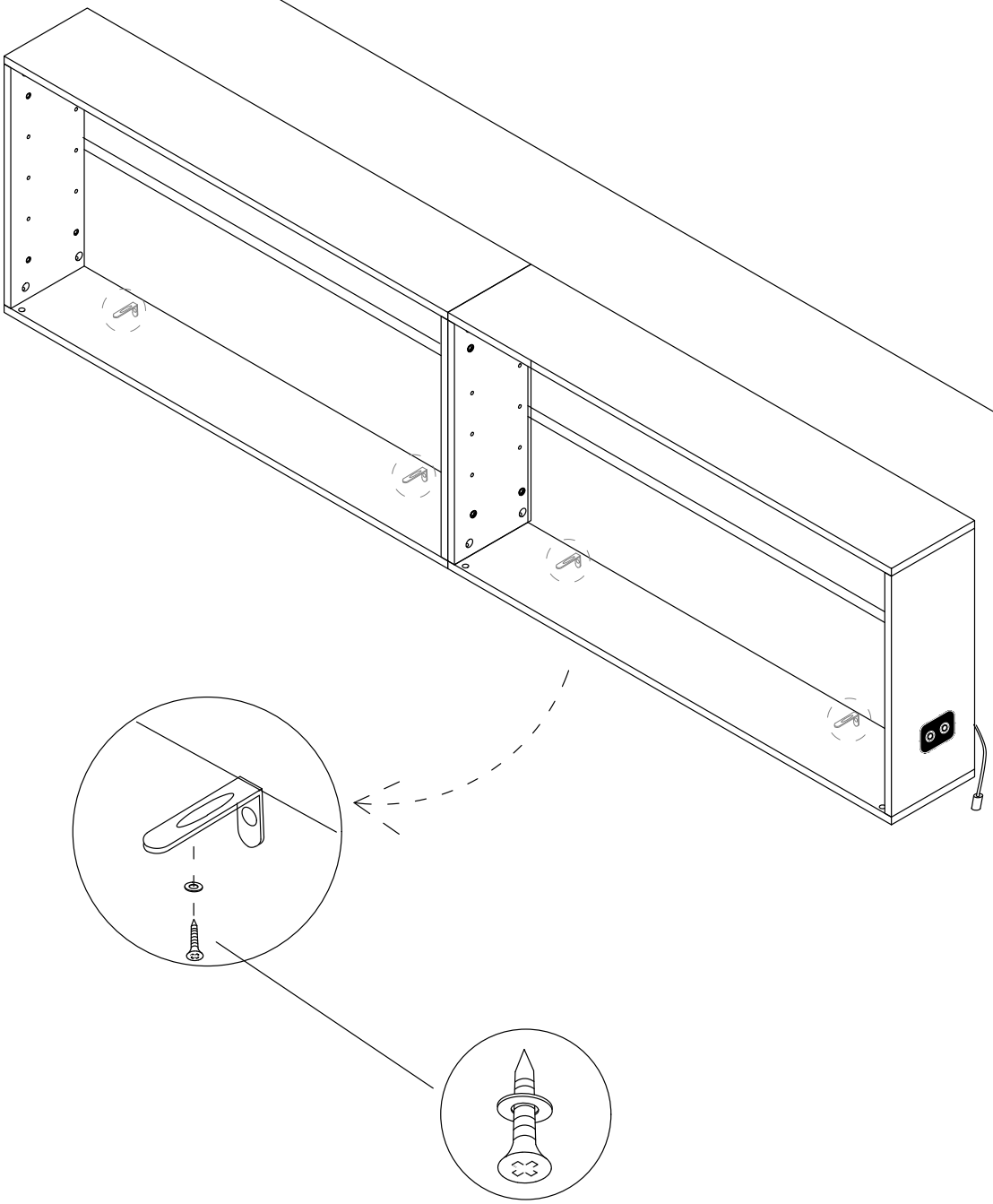

3.5x14mm

Install the anti fall hardware on the cabinet as shown in the picture first

Step 31

8

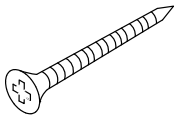

x4



x4

Fasten the cabinet to the wall

Step 32

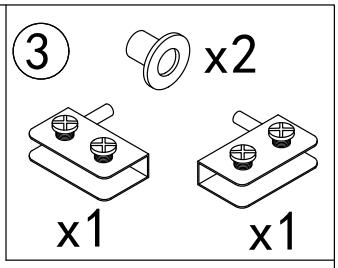

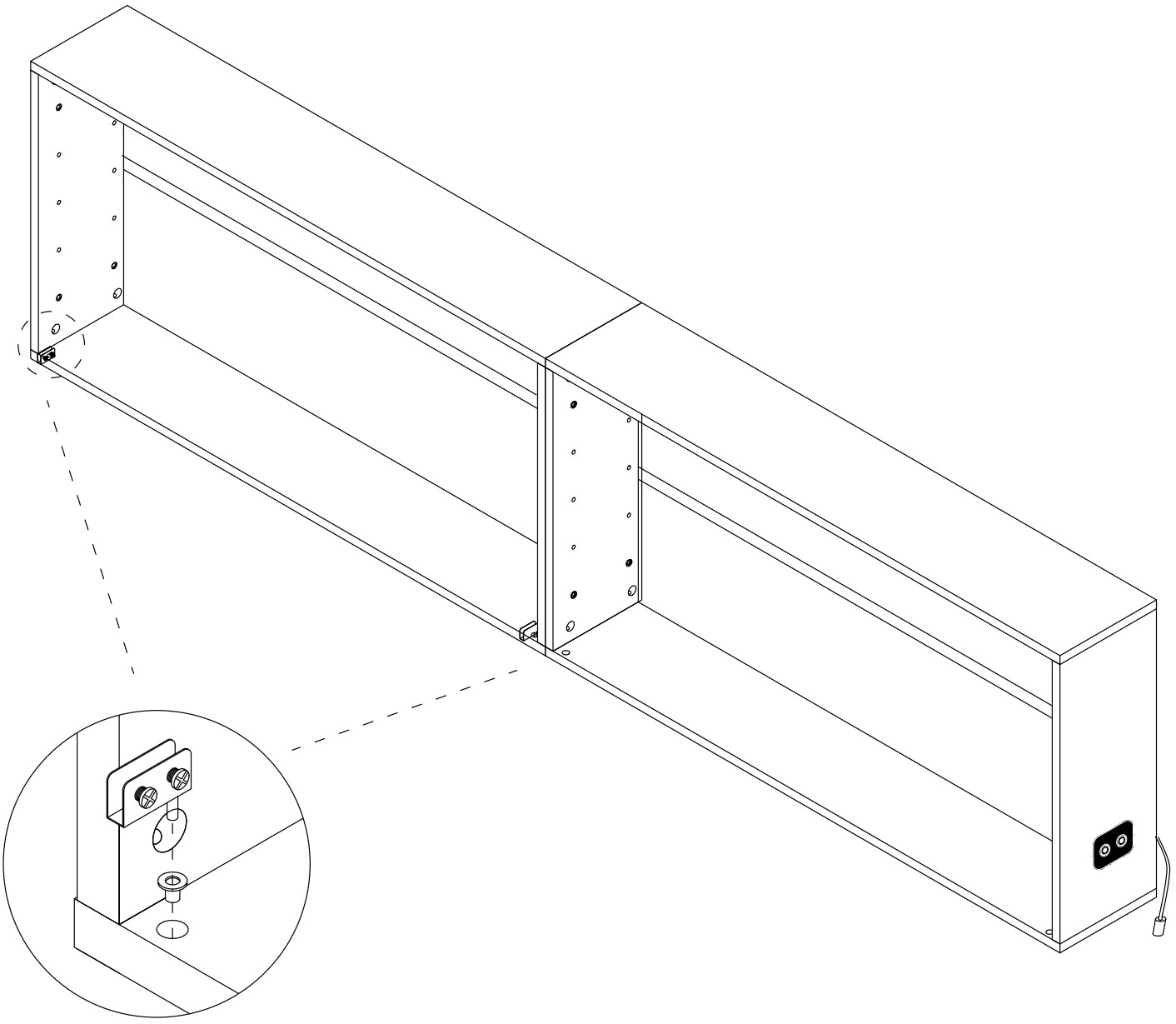

Step 33

First, completely unscrew the screws on the parts

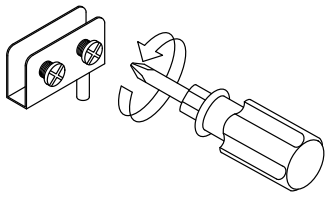

Then take out the black rubber pad from the inside of the part, and the white sponge remains unchanged inside the part.

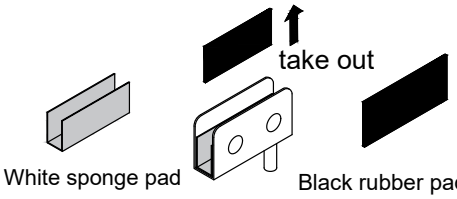

3

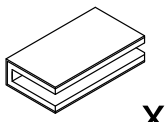

x2

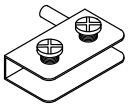

x2

x2

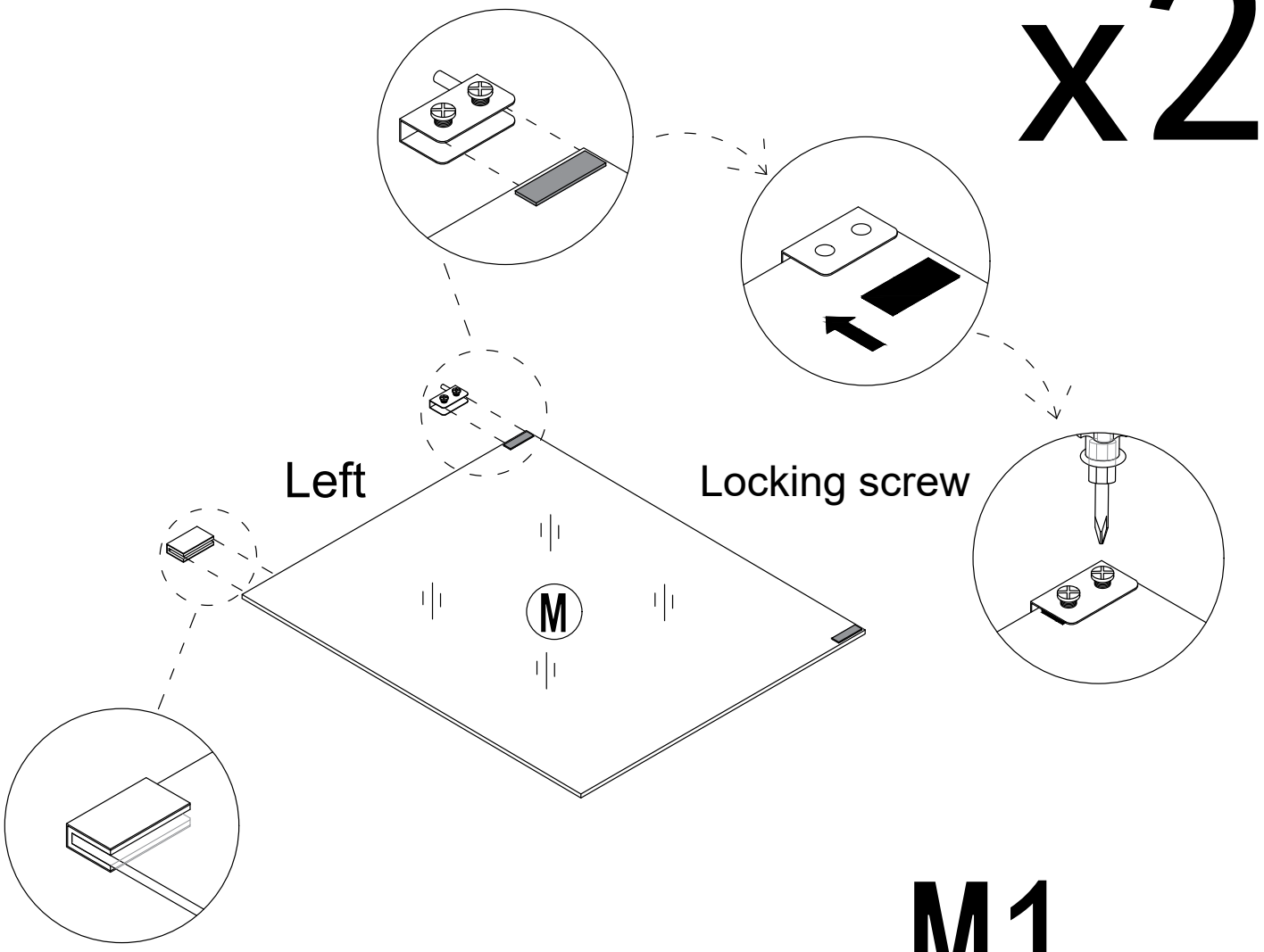

M1

Pay attention to the direction of the door hinge, rotate the screws to compress the black gasket, and do not place it in the opposite direction

Place the black gasket on the side where the screws are installed

Step 34

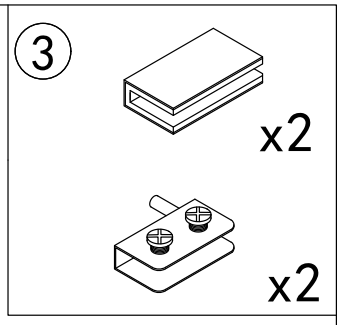

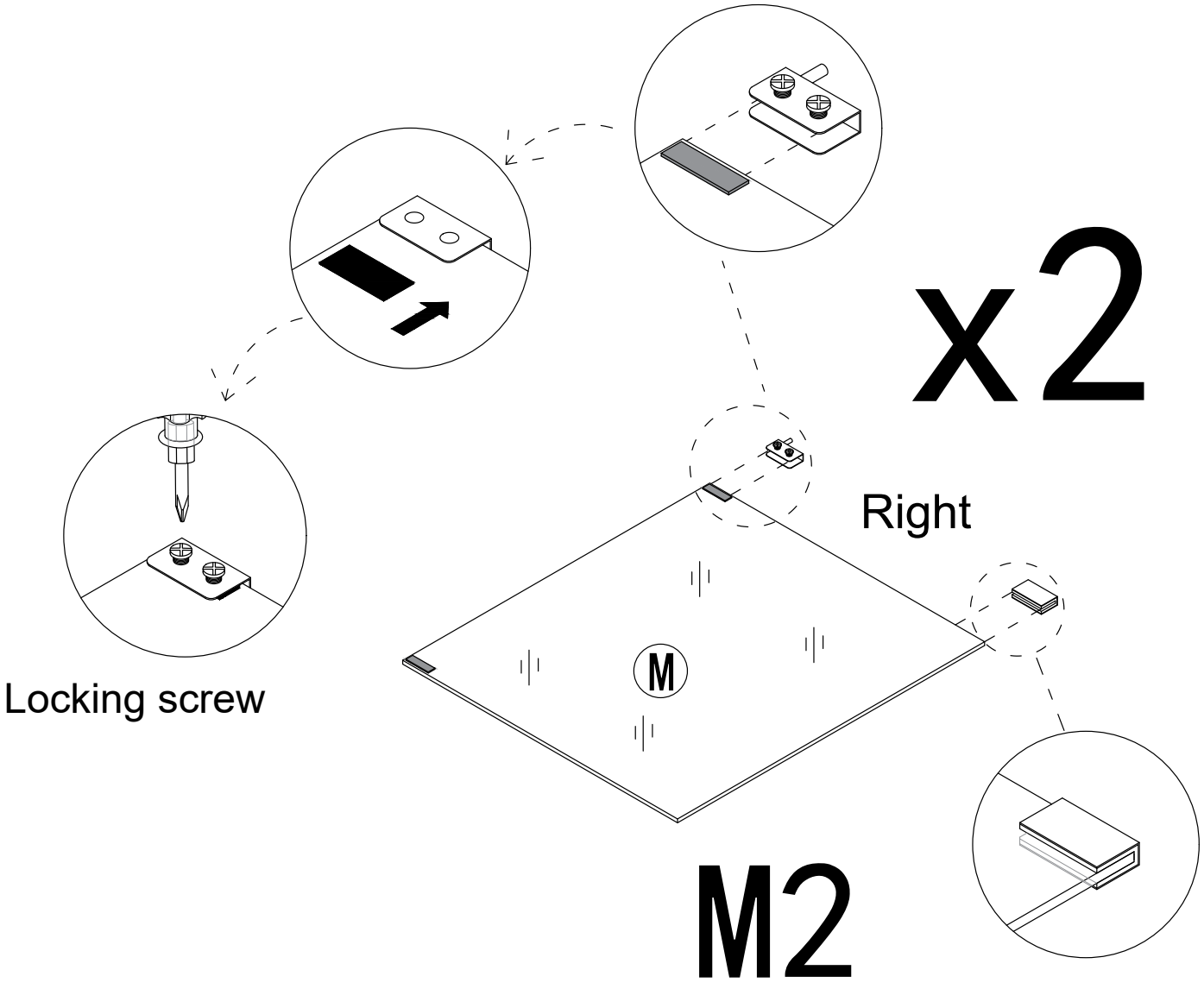

Pay attention to the direction of the door hinge, rotate the screws to compress the black gasket, and do not place it in the opposite direction

Place the black gasket on the side where the screws are installed

Step 35

③ x2

Pay attention to the direction of
the door hinge during installation

When installing a glass door, it is recommended to have two people install it to avoid the glass door colliding or hitting oneself.

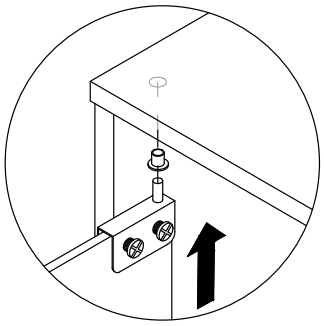

first

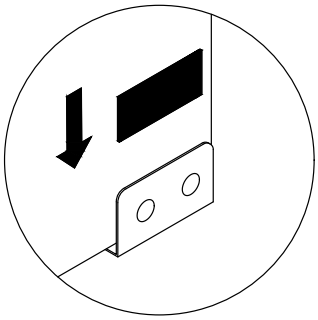

second

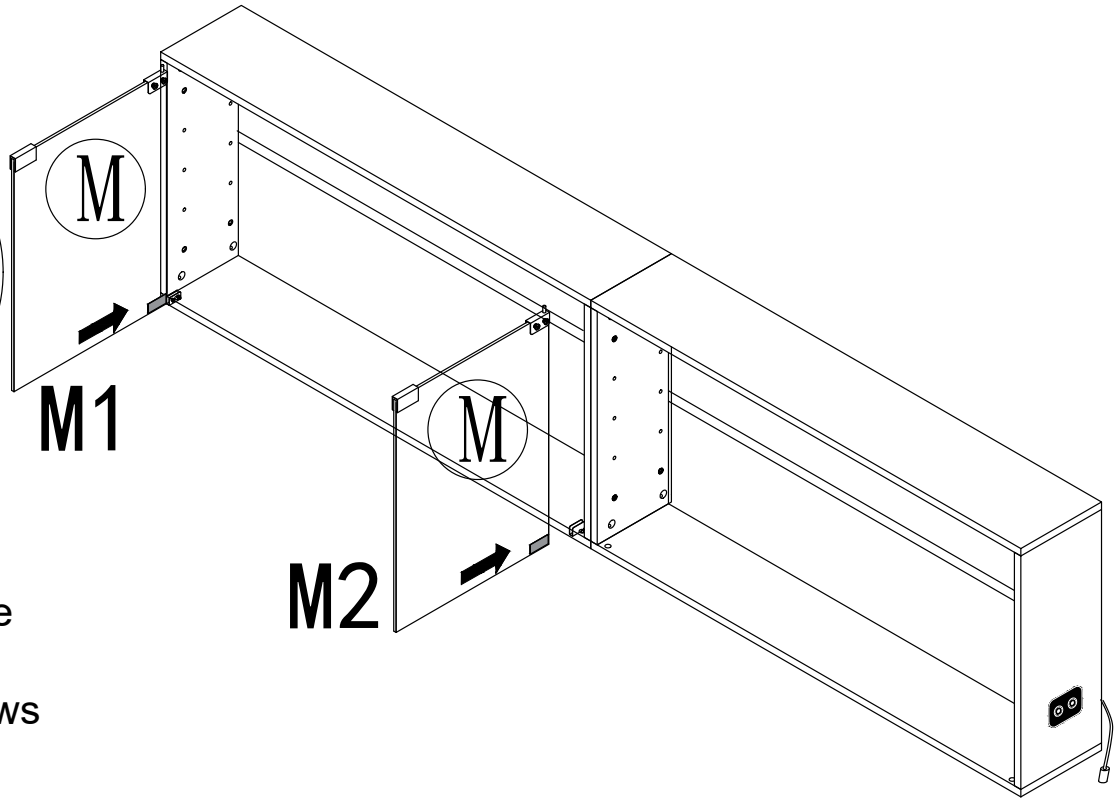

After installing the glass door, place the black gasket on the side where the screws are installed

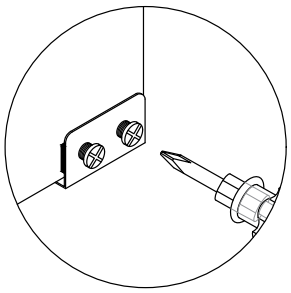

third

Locking screw

Step 36

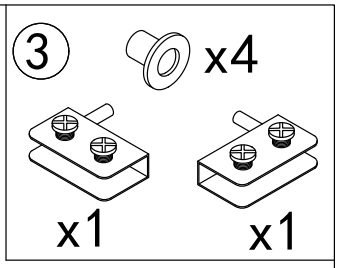

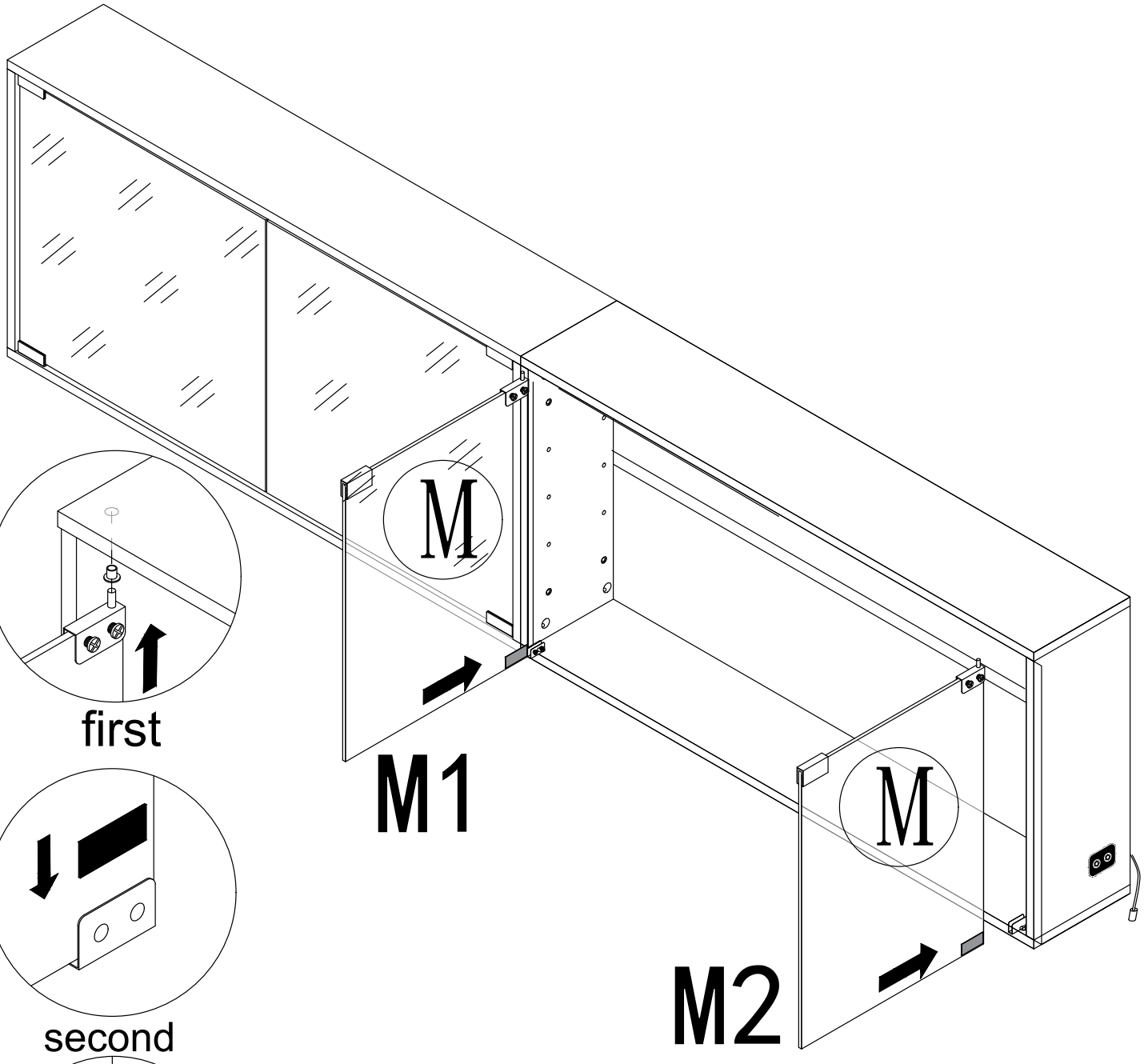

first

second

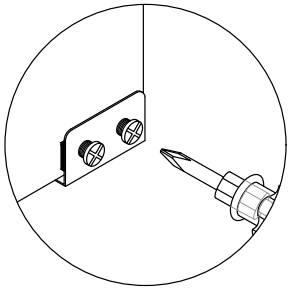

third

Locking screw

After installing the glass door, place the black gasket on the side where the screws are installed

Step 37

4 x8

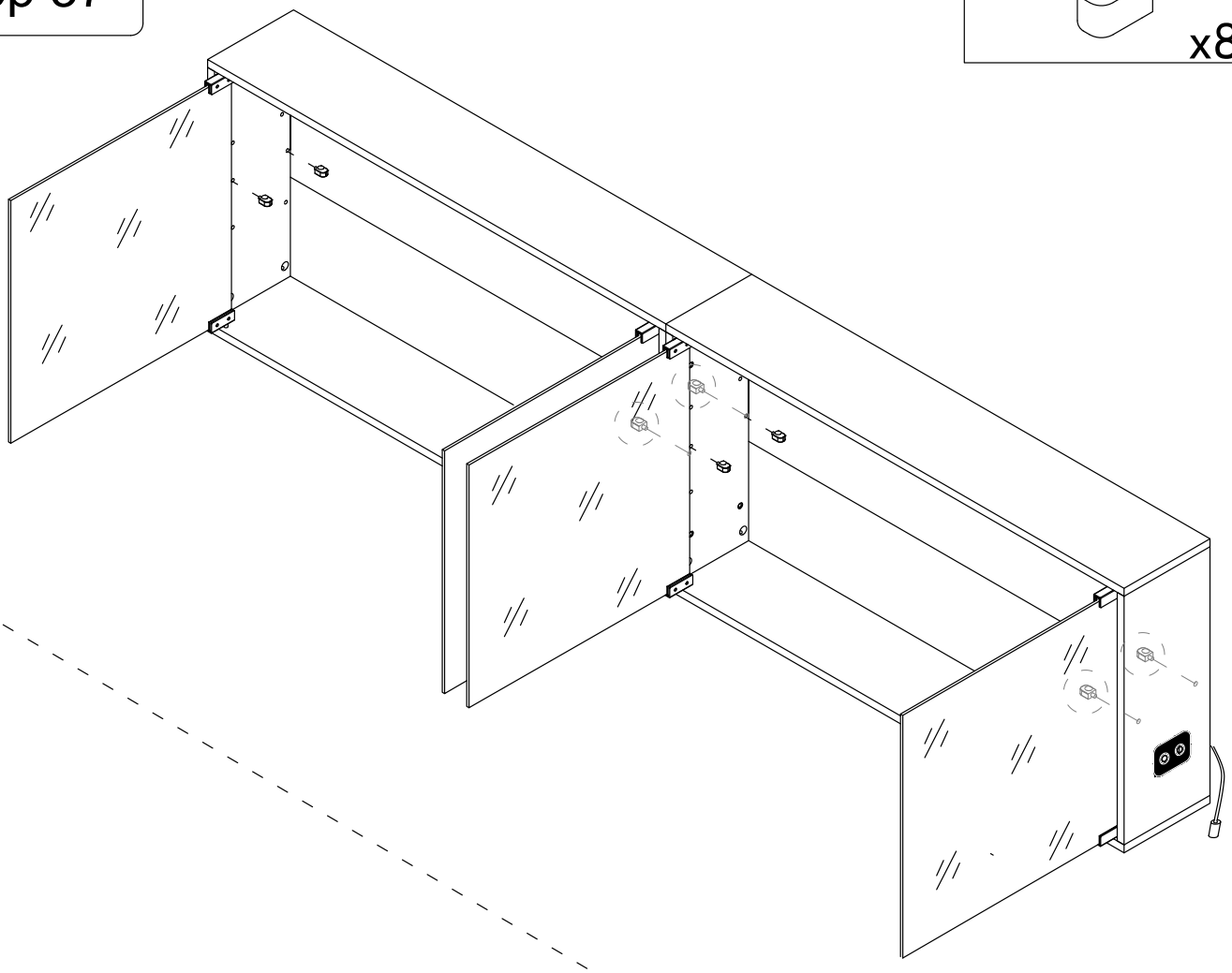

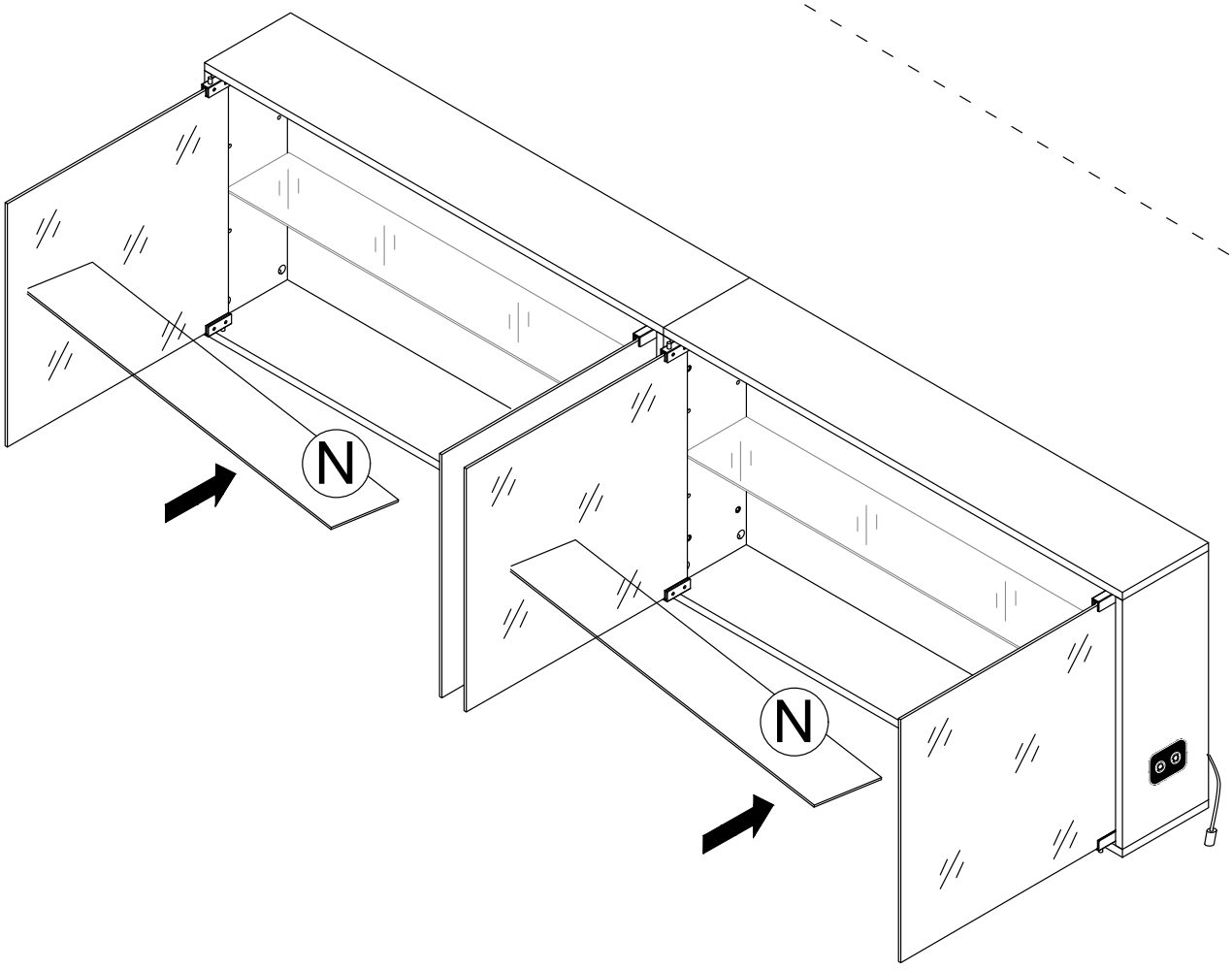

Step 38

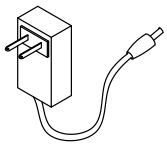

x1

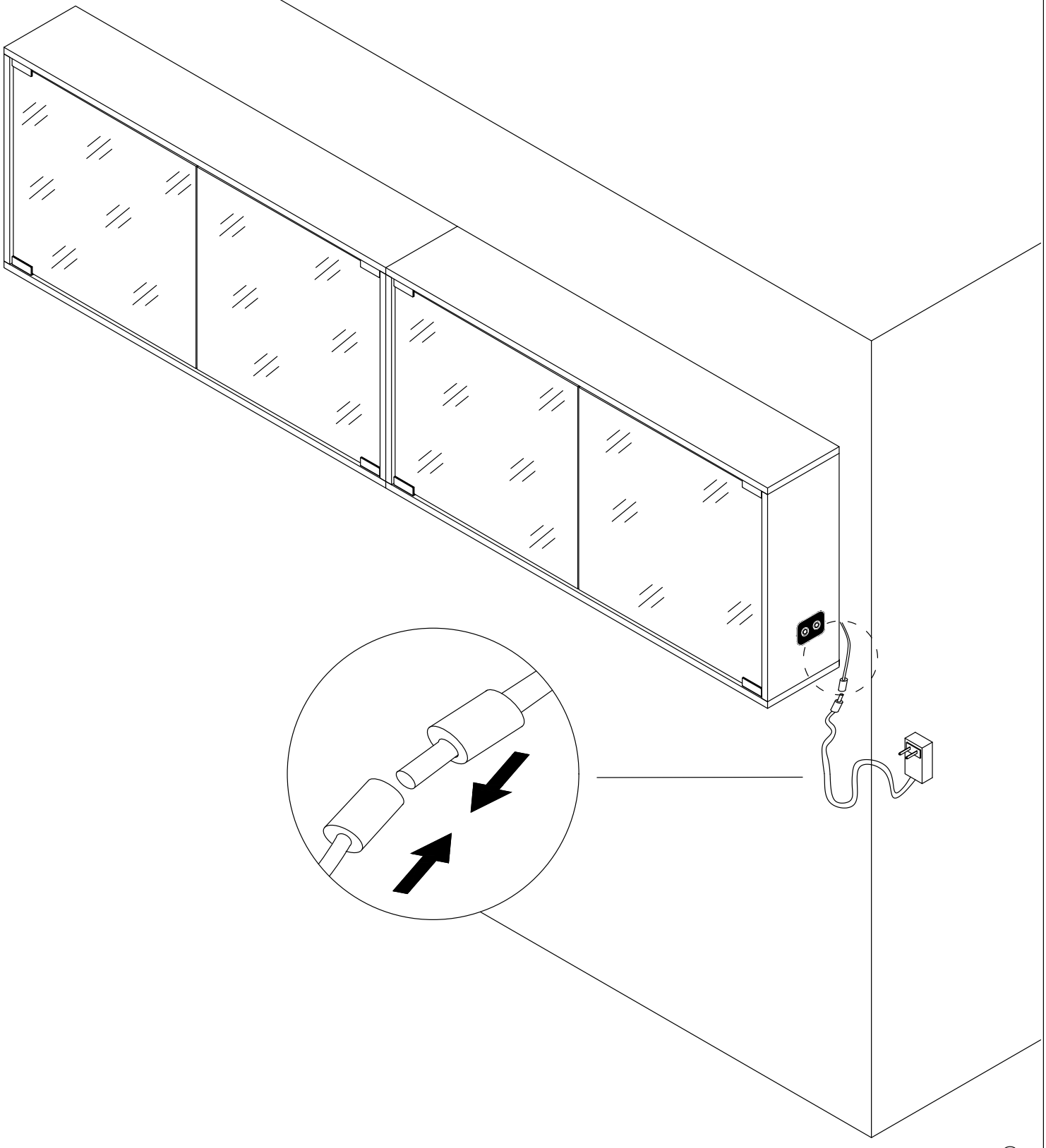

User's Guide

Thank you for purchasing this product. To use this product, please plug it into a 12V DC power supply. Please use if the product works normally after connecting to power.

Introduction

The box is an intelligent controller with 2 touch buttons. It can turn ON/OFF the light, change light colors, and adjust the light luminance.

Product Show

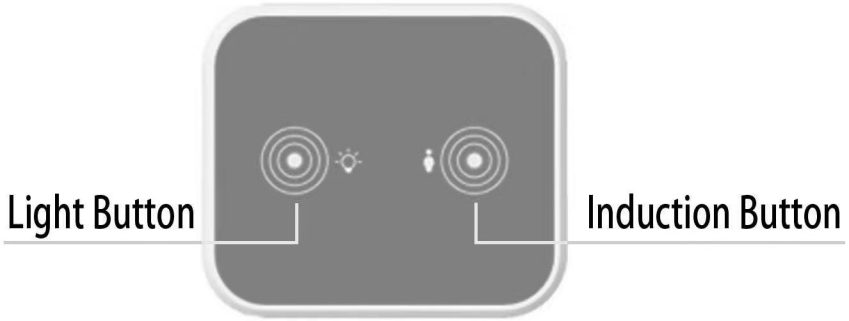

ATTENTION PLEASE

1. If there is no touch response suddenly, Re-plug the power to reset the touch static electricity.
2. If bubbles appear on the panel, remove the protective film.

Operation



This touch button is used to turn on/off, change colors, and adjust brightness.

A. Short touch -> lighting on -> short touch -> change light color -> short touch -> change light color -> short touch -> lighting off. **B**. Long touch -> adjust the luminance



This touch button is used to turn on/off the induction function.

A. Short touch to turn on the induction function. It can auto-turn on the light when people are close to the controller in 1 meters. It can auto power off the light when the body is far away from the controller after 30 seconds.

B. Long touch to turn off the induction function.

C. Note: When you touch the light button to change the light modes, the induction function will automatically turn off. It is best to turn on this function after selecting the light color and adjusting the brightness you want.