ASSEMBLY INSTRUCTION

This instruction booklet contains important safety information.
please read and keep for future reference.

This sofa collection works as modular sofa function, started as 2 seater sofa with left and right section, you can buy more components such as armless middle seat and ottoman to make it as 3 seater sofa, 4 seater sofa, L shape sectional, U shape sectional components to ensure all sofa section are well fit your living room area.

To ensure safe and satisfactory use of this product,please carefully read the below instructions before hand.

1.This sofa ships in several boxes,we recommend unpacking and starting assembly when several boxes are received.

2.Our cushions are vacuum packed for convenient shipping. Please allow 2-3 days for them to fully expand to their original shape and for any wrinkles to disappear.

3.In the event that a part is damaged or missing,no need to return the product,we will gladly help and ship your replacement parts free of charge.

Below are some guidelines for you how you can do mix and match.

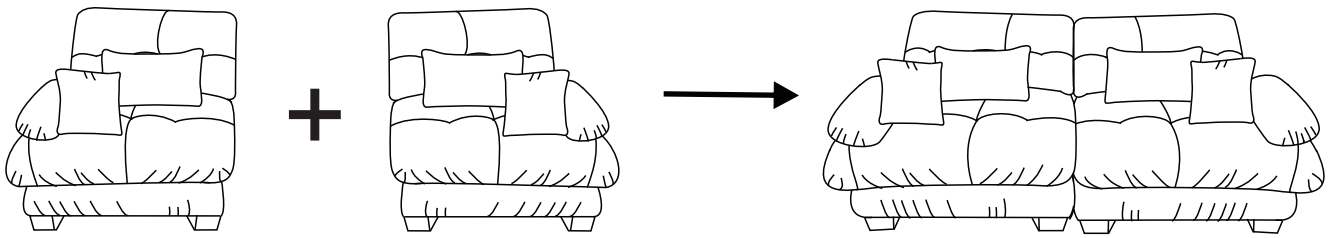

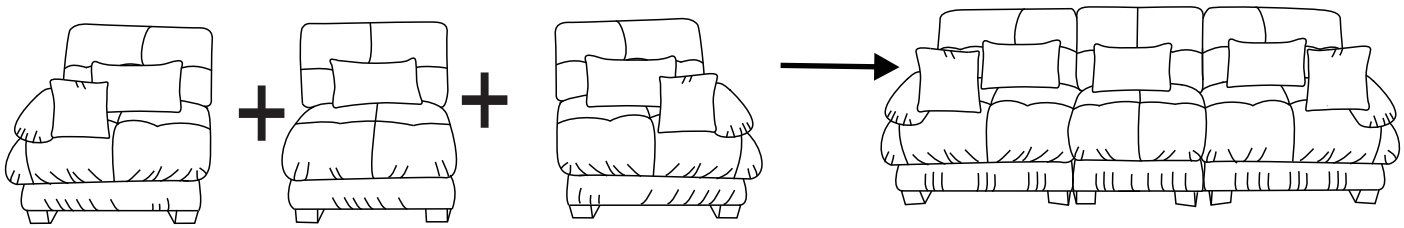

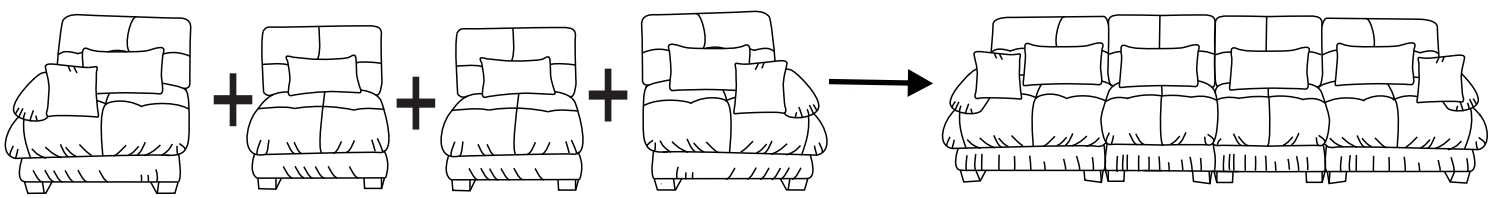

Assembly Instructions

IF YOU BUY 2 SEATER SOFA
please follow below assembly instruction

Parts List

A

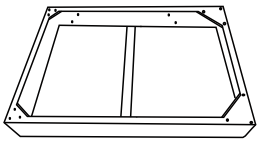

Left seat frame*1

B

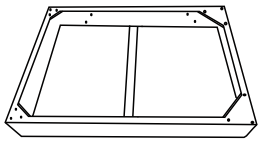

Right seat frame*1

C

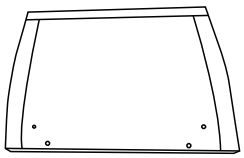

Big backrest*2

D

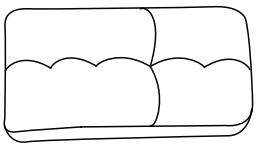

Left back cushion*1

E

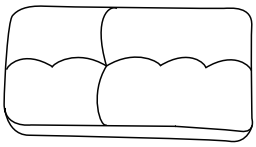

Right back cushion*1

F

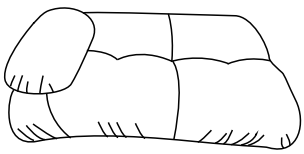

Left seat cushion*1

G

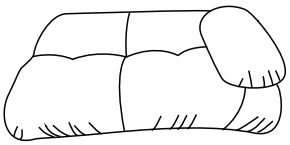

Right seat cushion*1

H

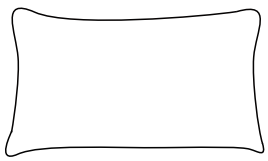

Waist pillow*2

I

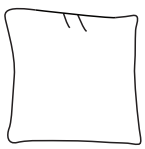

Pillow*2

J

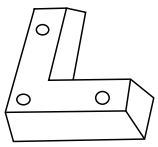

Leg*8

K

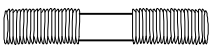

Bolt*8
M8*70mm

L

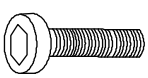

Bolt*24
M6*40mm

M



Washer*8

N

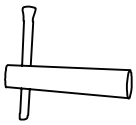

Allen key*1

O



Allen key*1

Note: Please retain all boxes until you are certain that your product isn't damaged and that you do not wish to return it. Disposal of boxes may prevent our ability to resolve your request.

STEP 1

1 Assemble the leg (J) to the left seat frame (A) with Bolts (L).

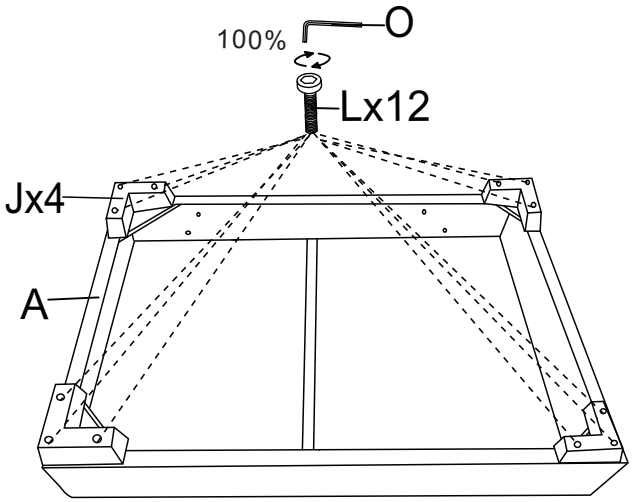

2 Assemble the leg (J) to the right seat frame (B) with Bolts (L).

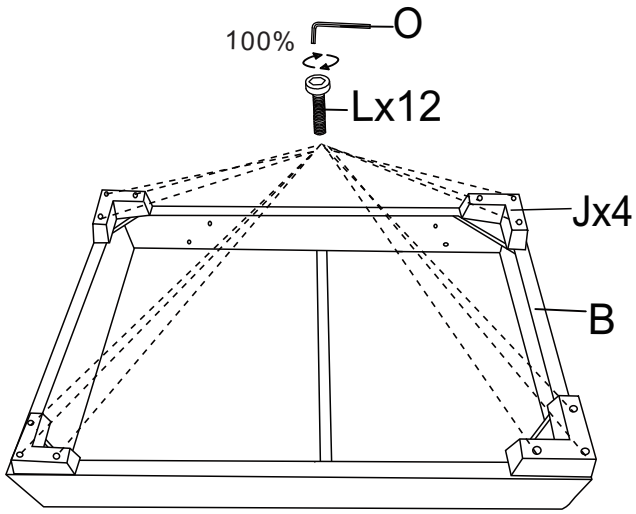

3 Assemble the big backrest (C) with Bolts (K).

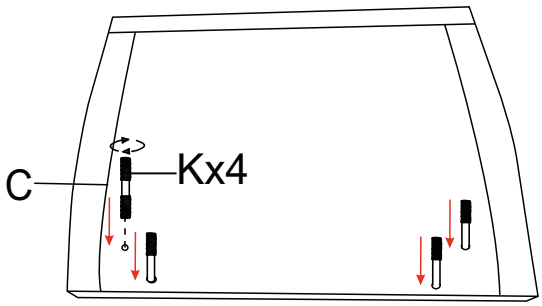

Big backrest 1

4 Assemble the big backrest (C) with Bolts (K).

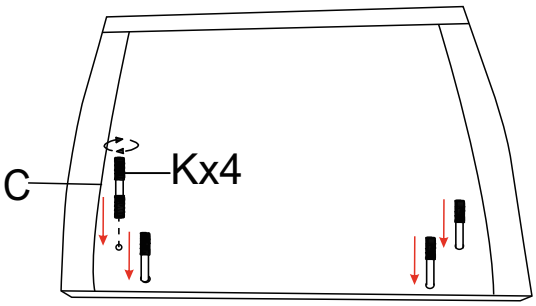

Big backrest 2

5 Assemble the big backrest (C) to the left seat frame(A) with washer (M).

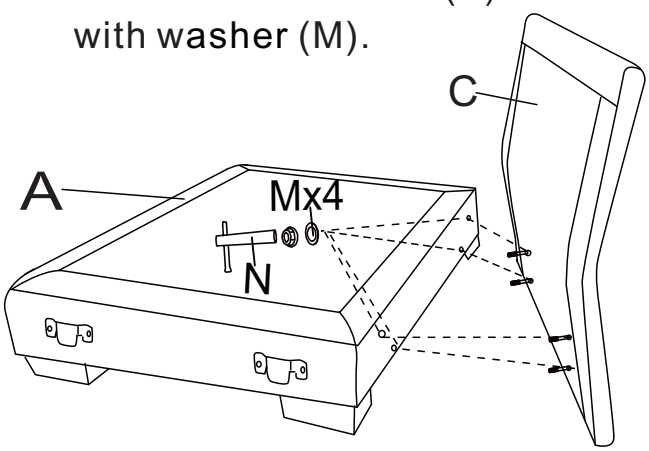

6 Assemble the big backrest (C) to the right seat frame(B) with washer (M).

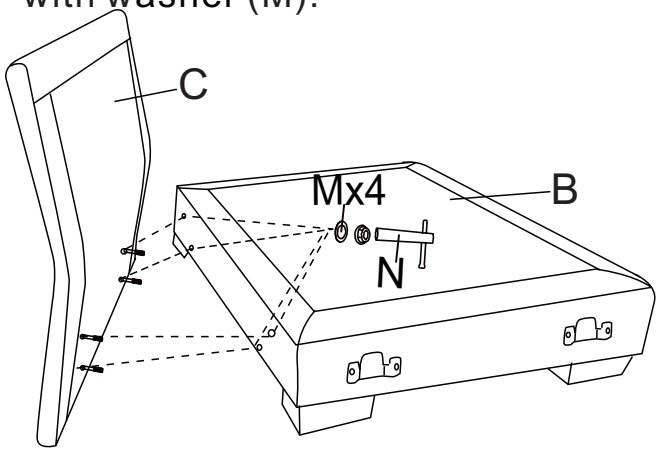

STEP 2

7 Insert the two mounts together.

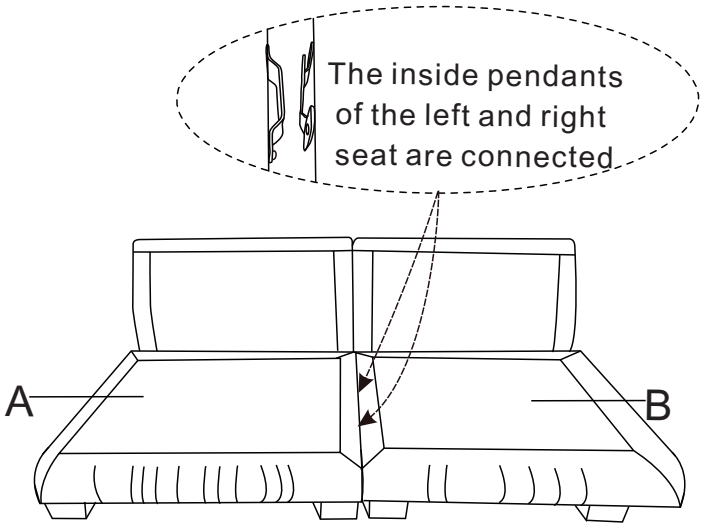

8 Put left back cushion(D) and
right back cushion(E) and
left seat cushion (F) and
right seat cushion (G)to the sofa.

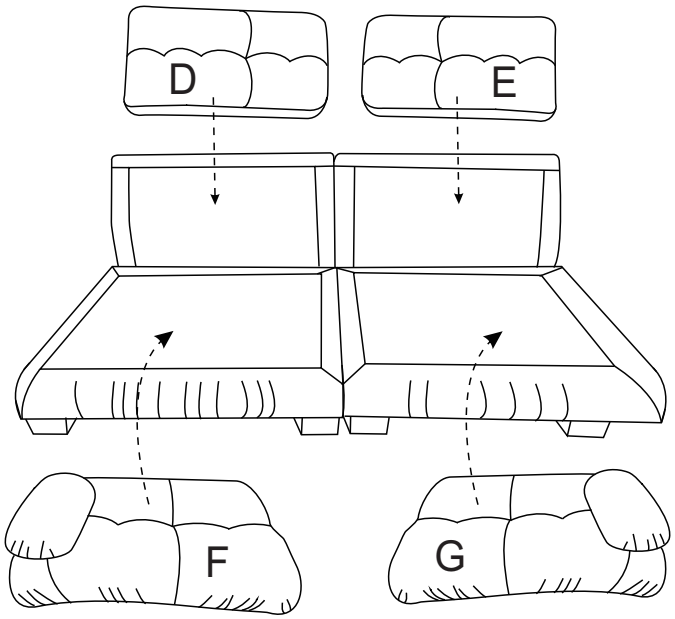

9 Put waist pillow(H) and pillow(I)
to the sofa.

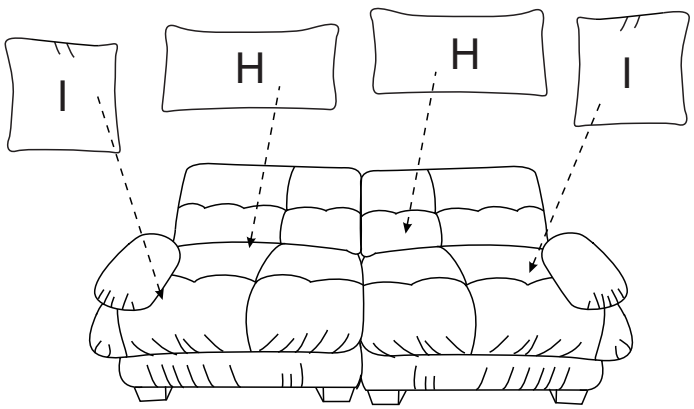

10 Completed .

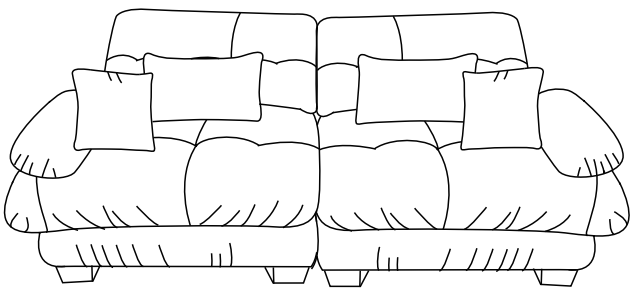

Assembly Instructions

IF YOU BUY 3 SEATER SOFA
please follow below assembly instruction

Parts List

A 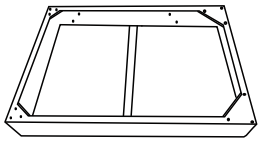 Left seat frame*1	B 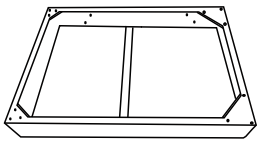 Right seat frame*1	P 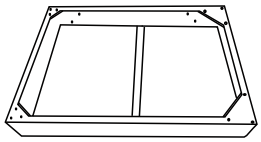 Middle seat frame*1	C 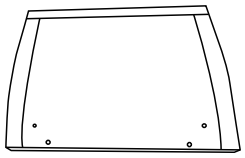 Big backrest*2
Q 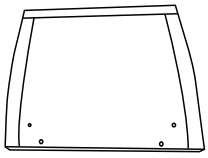 Small backrest*1	D 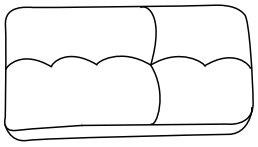 Left back cushion*1	E 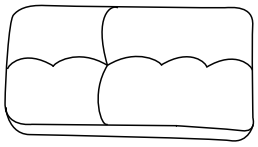 Right back cushion*1	R 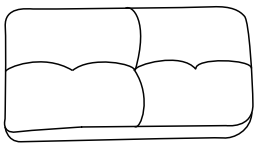 Middle back cushion*1
S 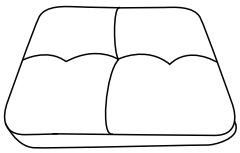 Middle seat cushion*1	F 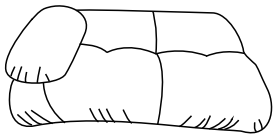 Left seat cushion*1	G 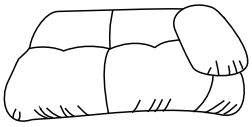 Right seat cushion*1	
H 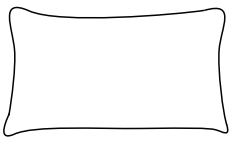 Waist pillow*3	I 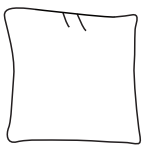 Pillow*2	J 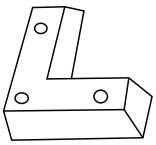 Leg*12	K 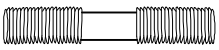 Bolt*12 M8*70mm
L 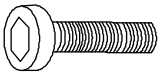 Bolt*36 M6*40mm	M  Washer*12	N 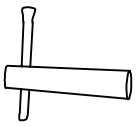 Allen key*3	O  Allen key*3

Note: Please retain all boxes until you are certain that your product isn't damaged and that you do not wish to return it. Disposal of boxes may prevent our ability to resolve your request.

STEP 1

1 Assemble the leg (J) to the left seat frame (A) with Bolts (L).

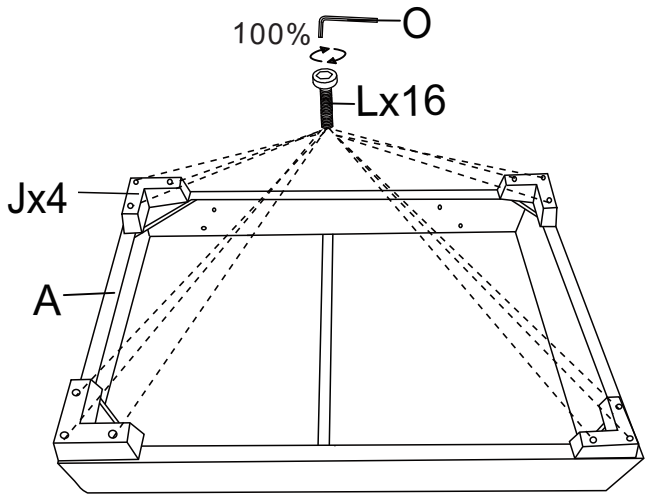

2 Assemble the leg (J) to the right seat frame (B) with Bolts (L).

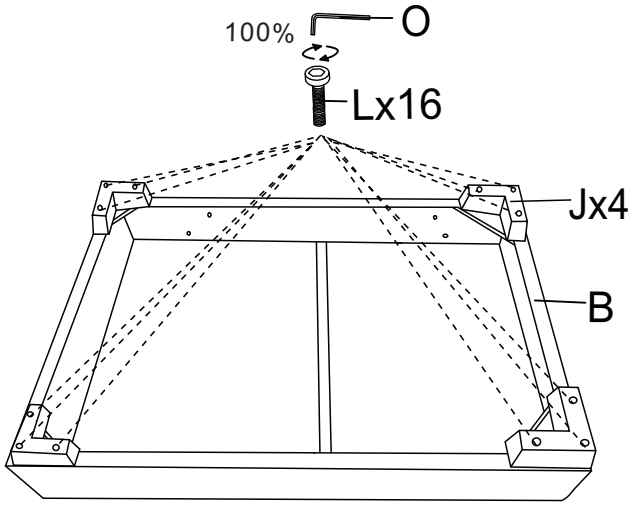

3 Assemble the leg (J) to the middle seat frame (P) with Bolts (L).

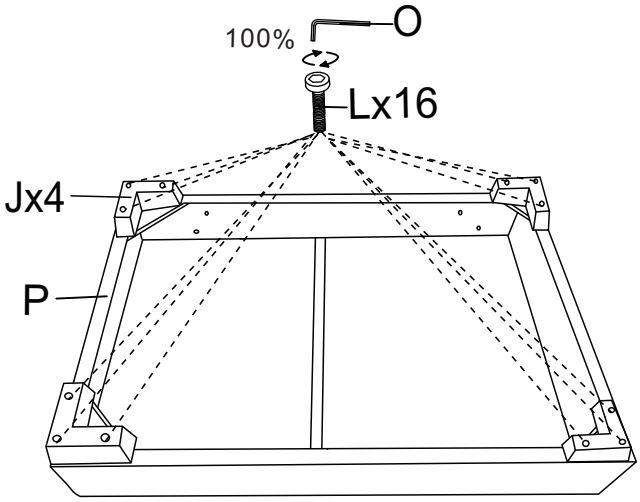

4 Assemble the big backrest (C) with Bolts (K).

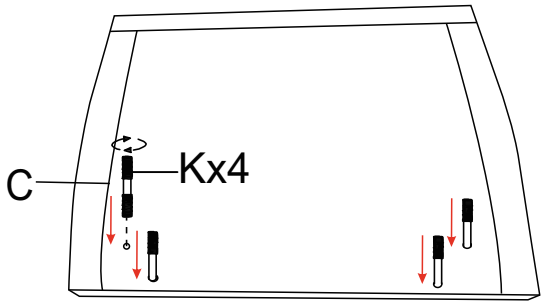

Big backrest 1

5 Assemble the big backrest(C) with Bolts (K).

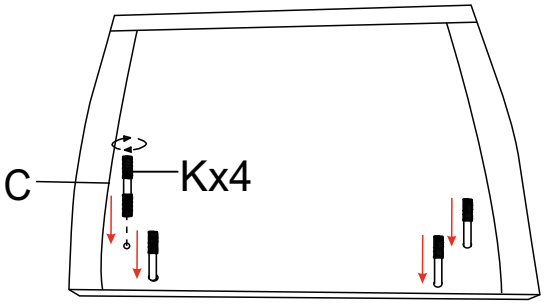

Big backrest 2

6 Assemble the small backrest (Q) with Bolts (K).

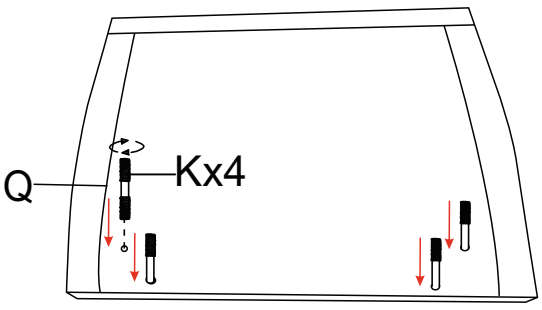

Small backrest

STEP 2

⑦ Assemble the big backrest (C)to the left seat frame(A) with washer (M).

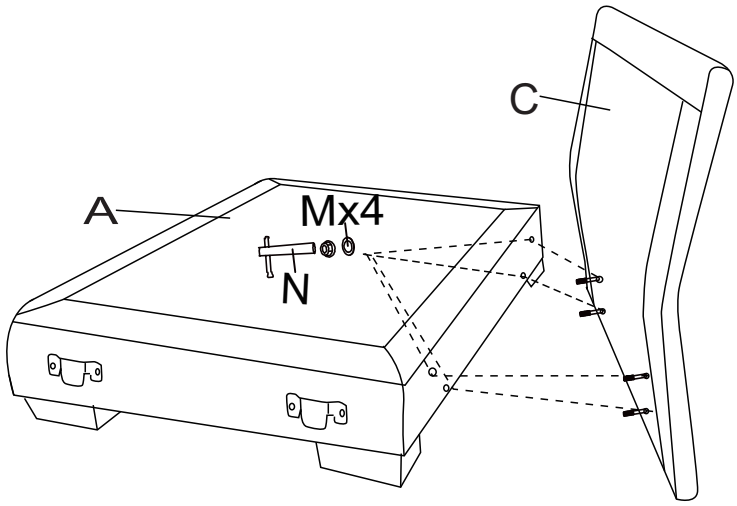

⑧ Assemble the big backrest (C)to the right seat frame(B) with washer (M)

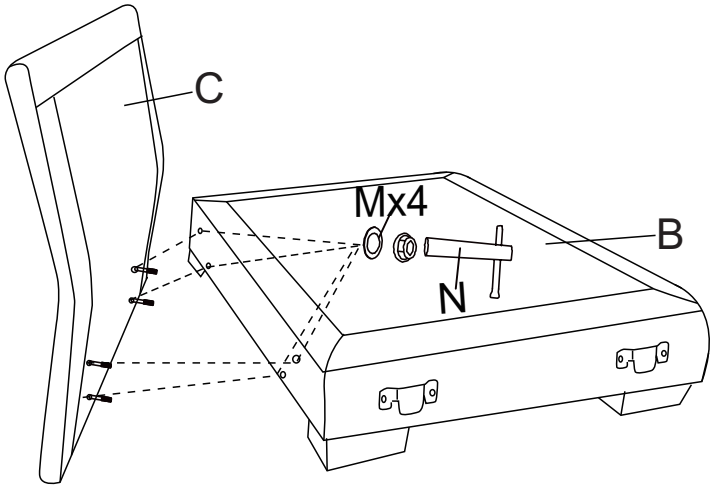

⑨ Assemble the small backrest(Q)to the middle seat frame(P) with washer (M).

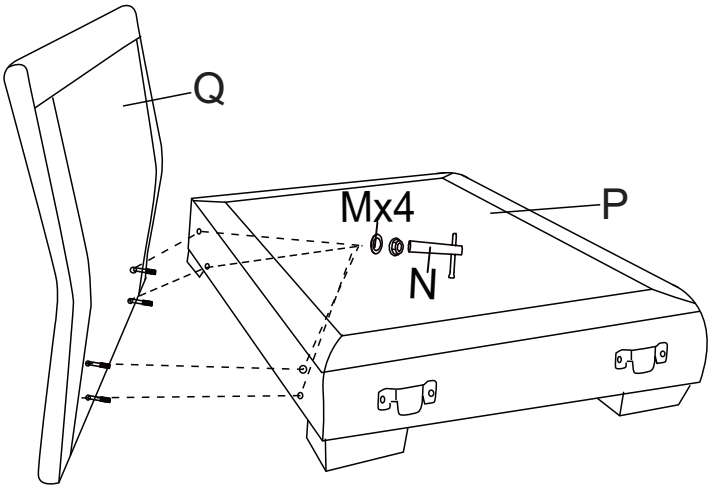

STEP 3

⑩ Insert the two mounts together.

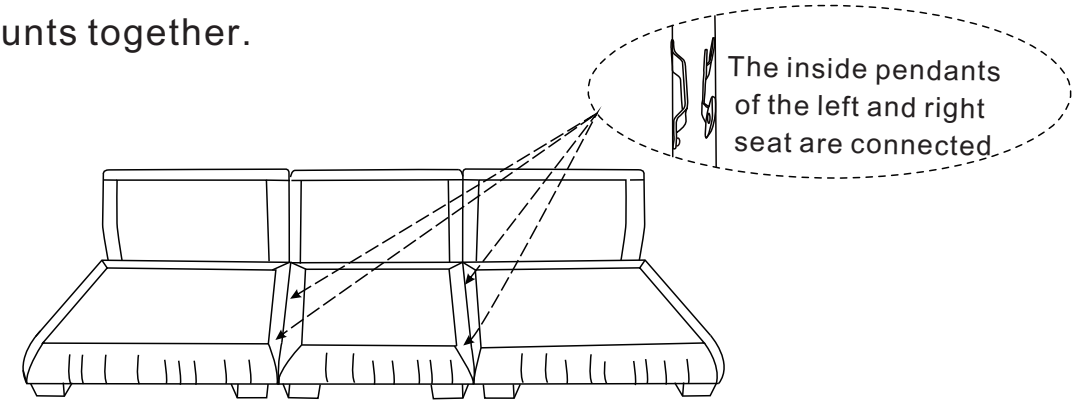

⑪ Put left back cushion(D) and middle back cushion(R) and right back cushion(E) and left seat cushion (F) and middle seat cushion(S)and right seat cushion(G)to the sofa.

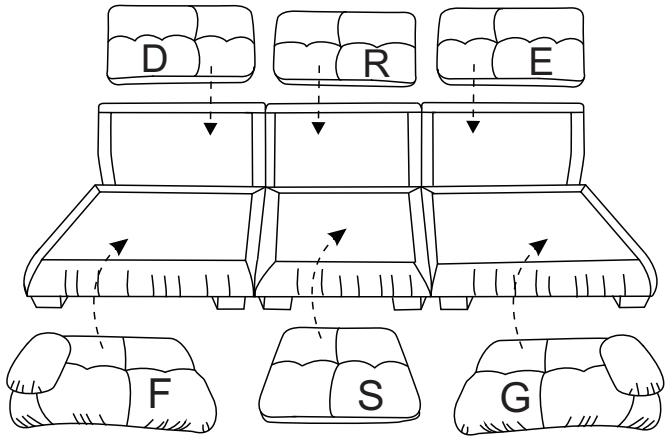

⑫ Put waist pillow(H) and pillow(I) to the sofa.

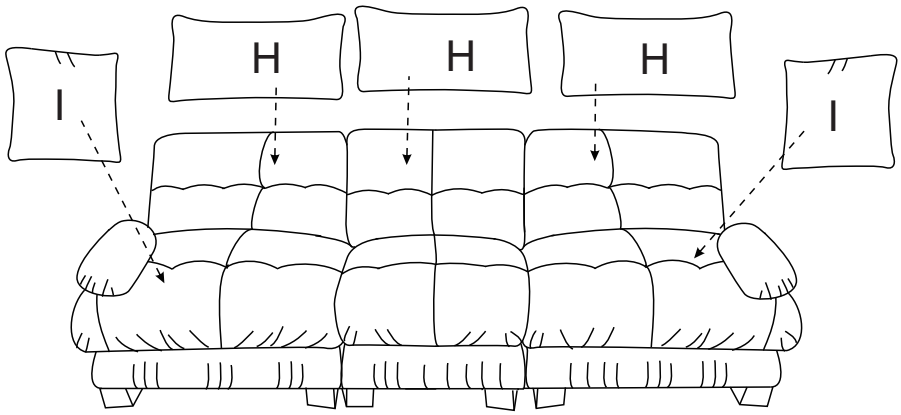

⑬ Completed .

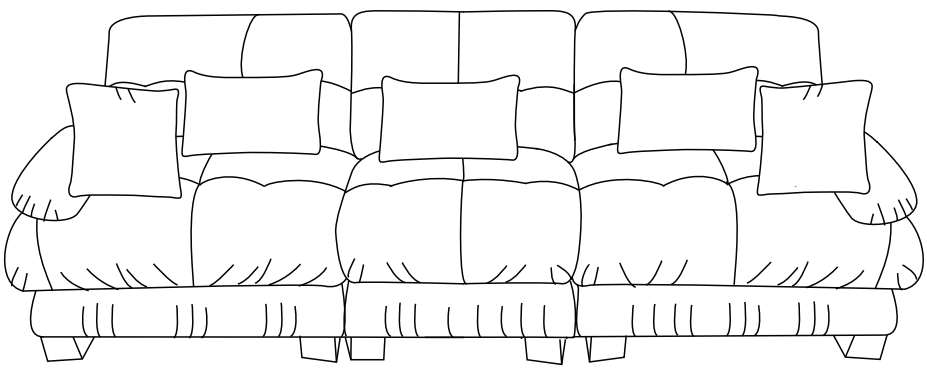

Assembly Instructions

IF YOU BUY 4 SEATER SOFA
please follow below assembly instruction

Parts List

A 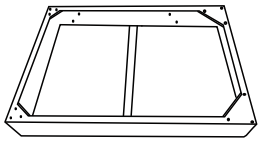 Left seat frame*1	B 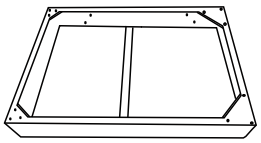 Right seat frame*1	P 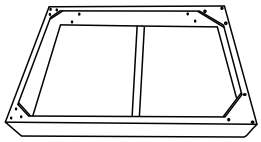 Middle seat frame*1	C 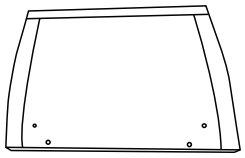 Big backrest*2
Q 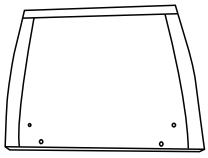 Small backrest*2	D 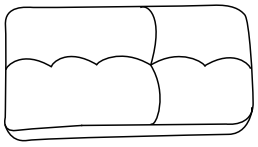 Left back cushion*1	E 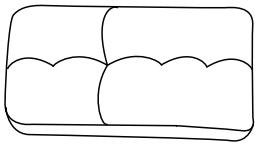 Right back cushion*1	R 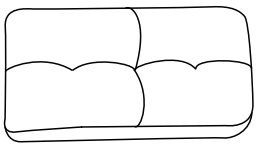 Middle back cushion*2
S 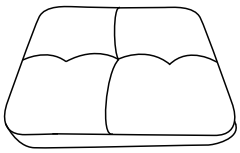 Middle seat cushion*2	F 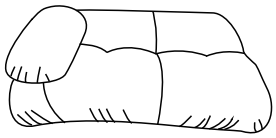 Left seat cushion*1	G 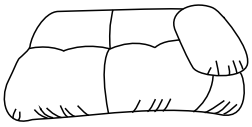 Right seat cushion*1	
H 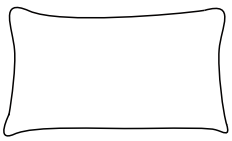 Waist pillow*4	I 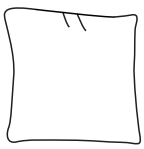 Pillow*2	J 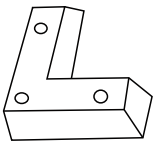 Leg*16	K 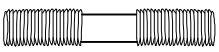 Bolt*16 M8*70mm
L 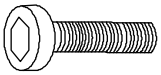 Bolt*48 M6*40mm	M  Washer*16	N 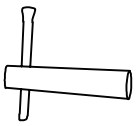 Allen key*4	O  Allen key*4

Note: Please retain all boxes until you are certain that your product isn't damaged and that you do not wish to return it. Disposal of boxes may prevent our ability to resolve your request.

STEP 1

1 Assemble the leg (J) to the left seat frame (A) with Bolts (L).

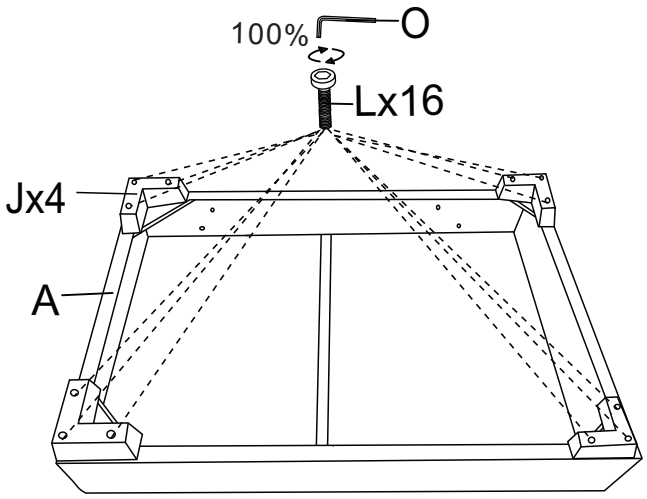

2 Assemble the leg (J) to the right seat frame (B) with Bolts (L).

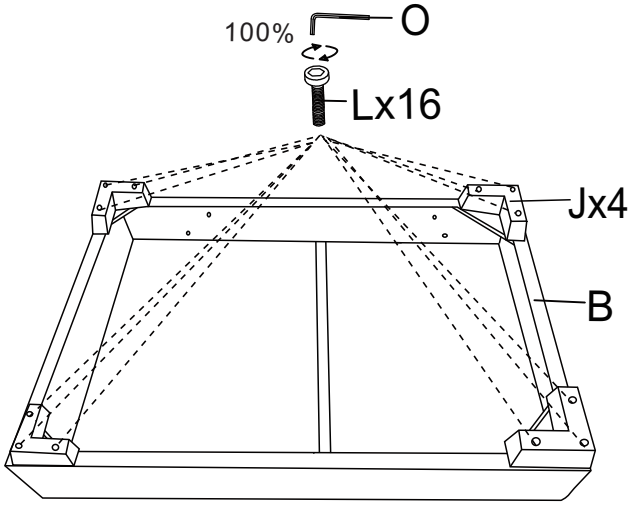

3 Assemble the leg (J) to the middle seat frame (P) with Bolts (L).

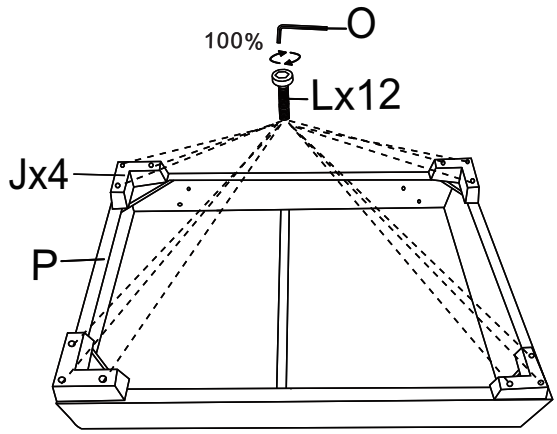

Middle seat frame 1

4 Assemble the leg (J) to the middle seat frame (P) with Bolts (L).

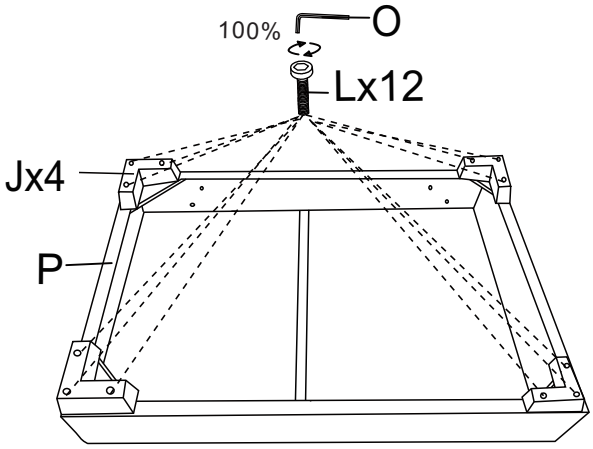

Middle seat frame 2

5 Assemble the big backrest (C) with Bolts (K).

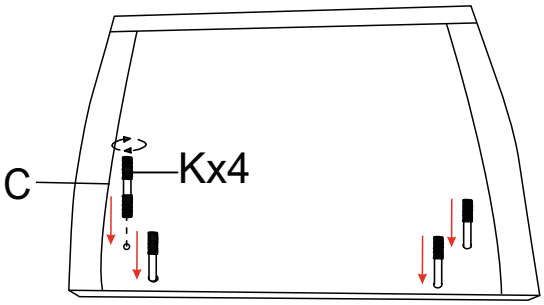

Big backrest 1

6 Assemble the big backrest (C) with Bolts (K).

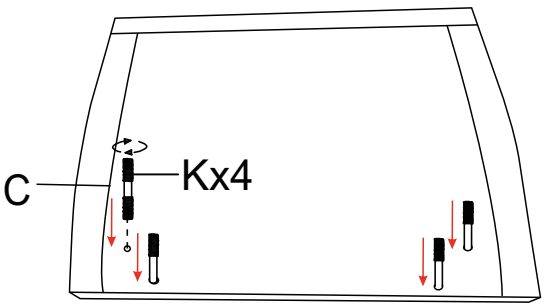

Big backrest 2

STEP 2

⑦ Assemble the small backrest (Q) with Bolts (K).

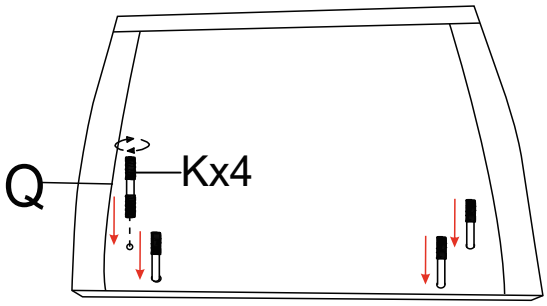

Small backrest 1

⑧ Assemble the small backrest (Q) with Bolts (K).

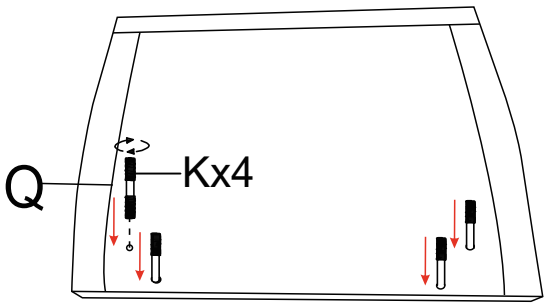

Small backrest 2

⑨ Assemble the big backrest (C) to the left seat frame(A) with washer (M).

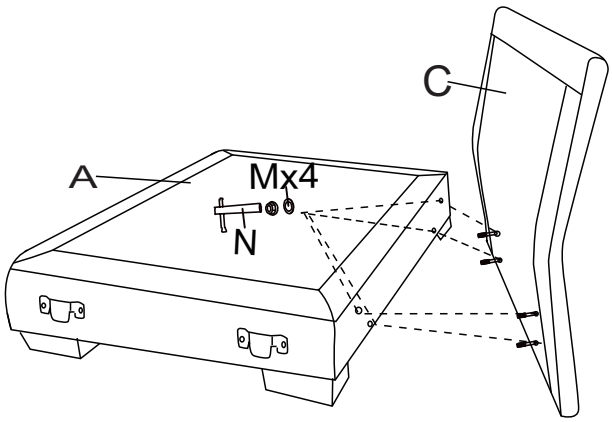

⑩ Assemble the big backrest (C) to the right seat frame(B) with washer (M).

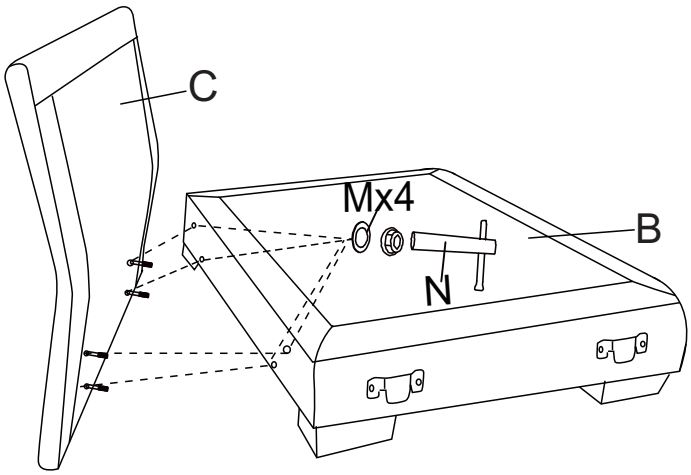

⑪ Assemble the small backrest(Q) to the middle seat frame(P) with washer (M).

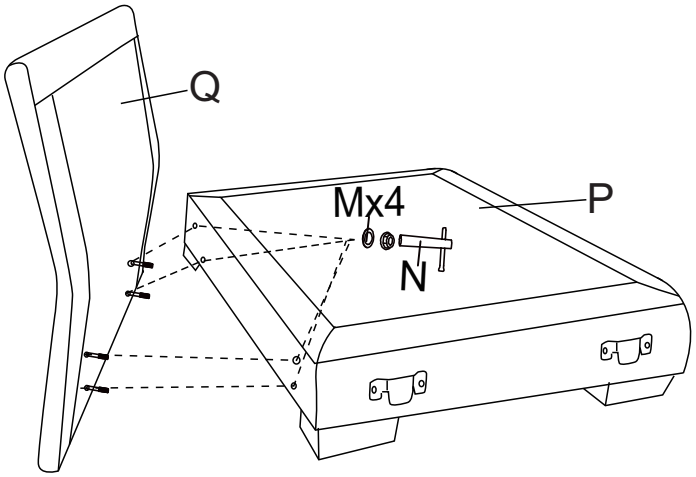

⑫ Assemble the small backrest (Q) to the middle seat frame(P) with washer (M).

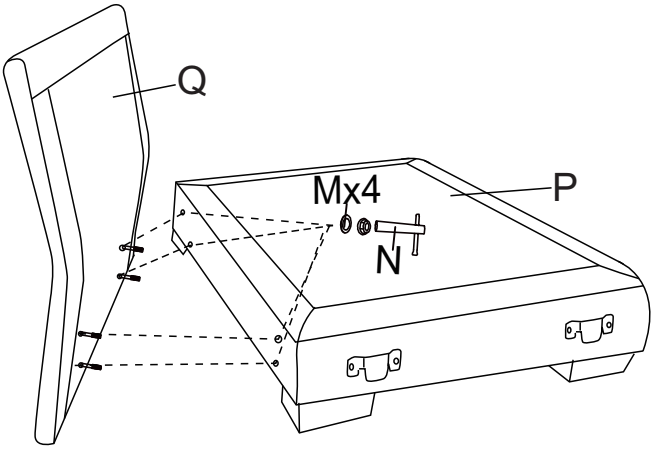

STEP 3

⑬ Insert the two mounts together.

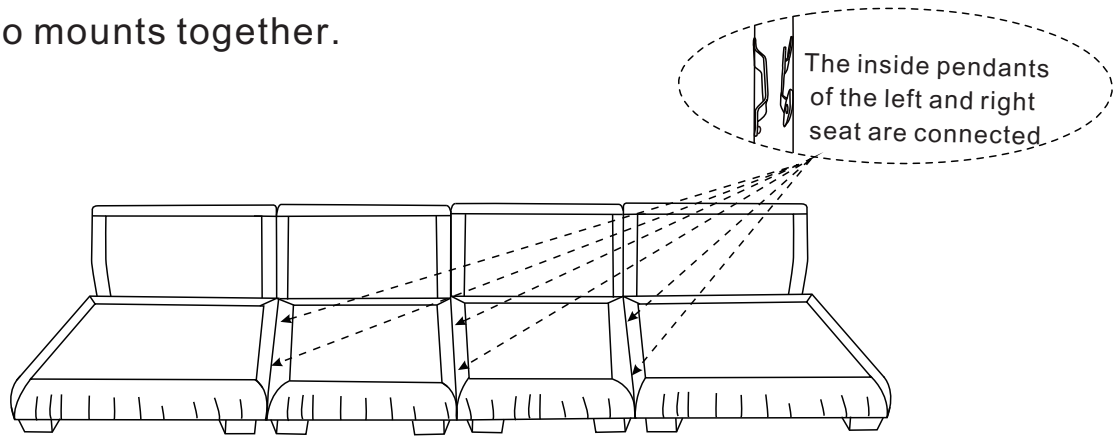

⑭ Put left back cushion(D) and
middle back cushion(R) and
right back cushion(E) and
left seat cushion (F) and
middle seat cushion(S)and
right seat cushion(G)to the sofa.

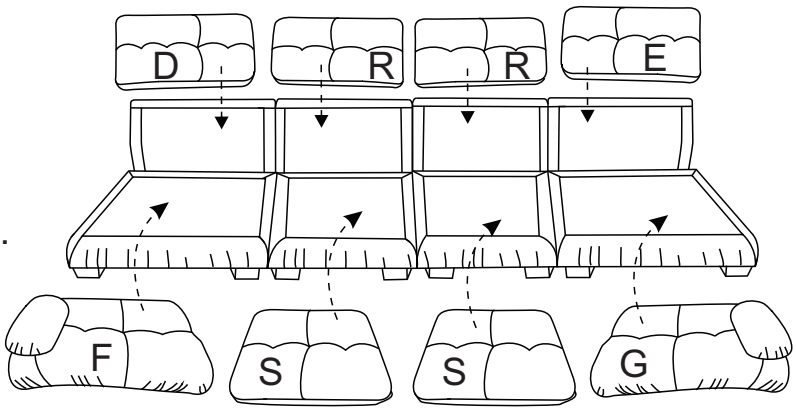

⑮ Put waist pillow(H) and pillow(I)
to the sofa.

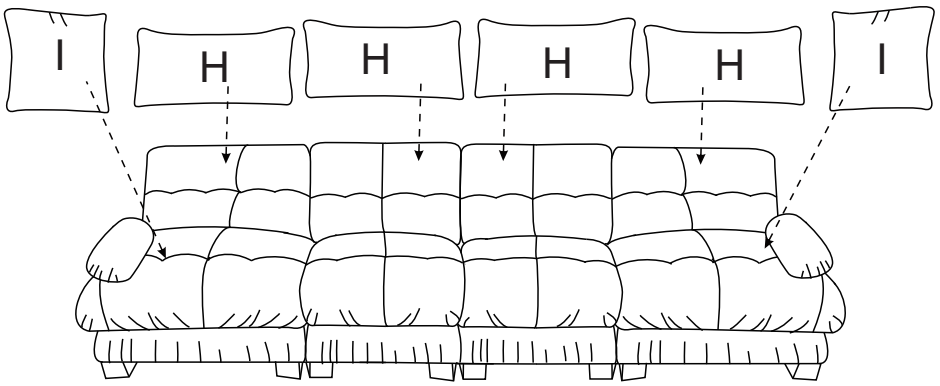

⑯ Completed .

