ASSEMBLY INSTRUCTION

A		1	B		1	C	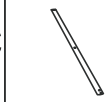	4	D		1	E	 M6X13	4
F	 M6X16	8	G	 M6X20	4	H		4	I		1			

1

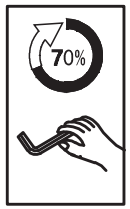

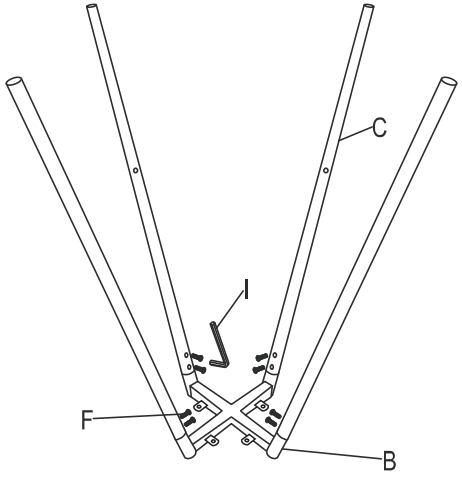

2

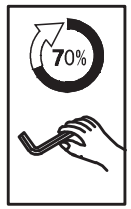

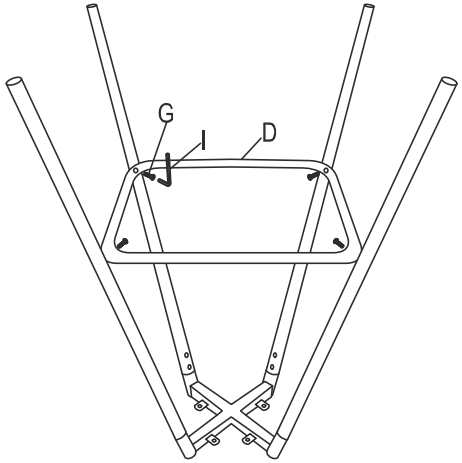

3



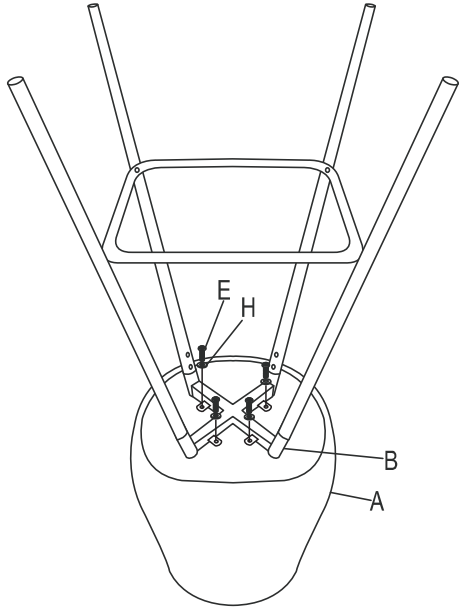

4

